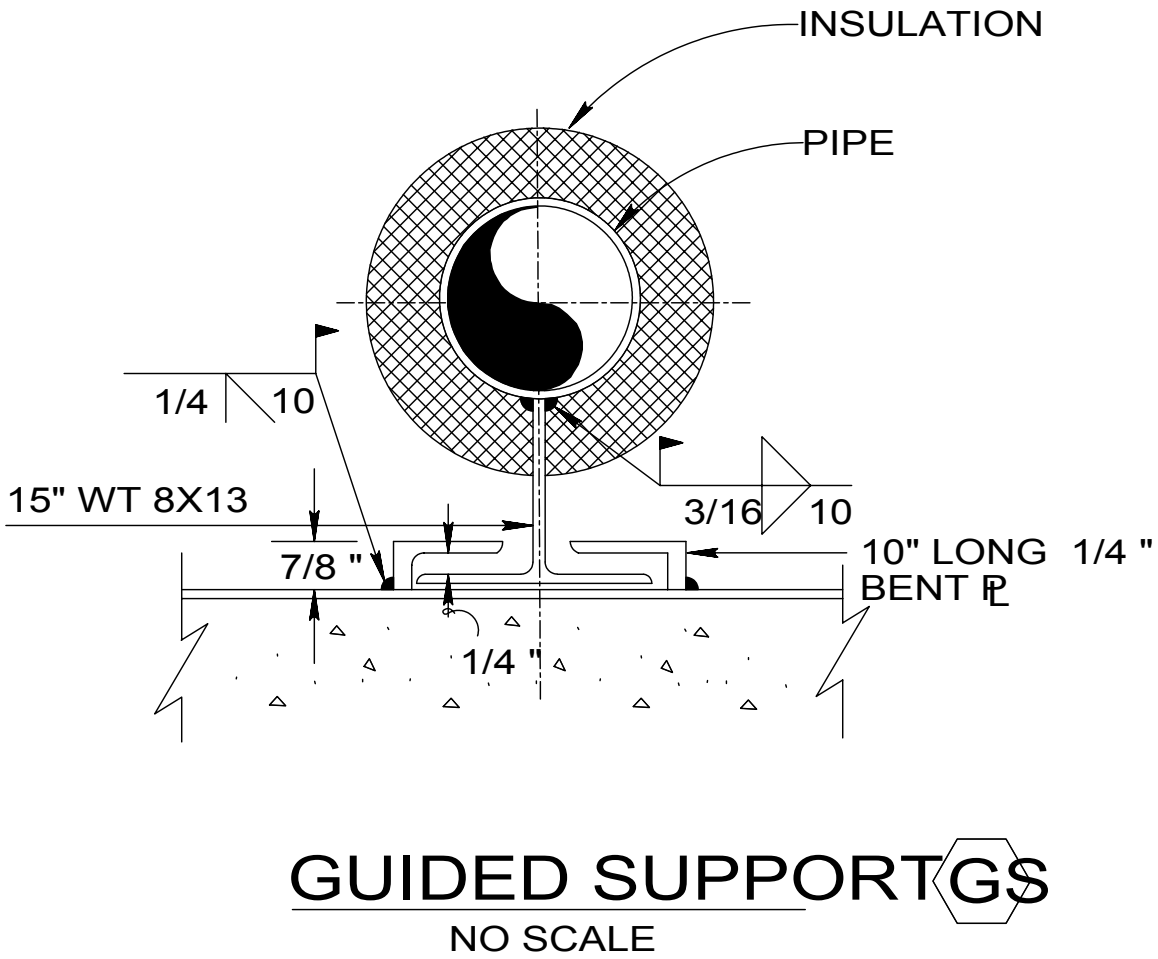

Fig. 7-4. Typical Guided Pipe Support.