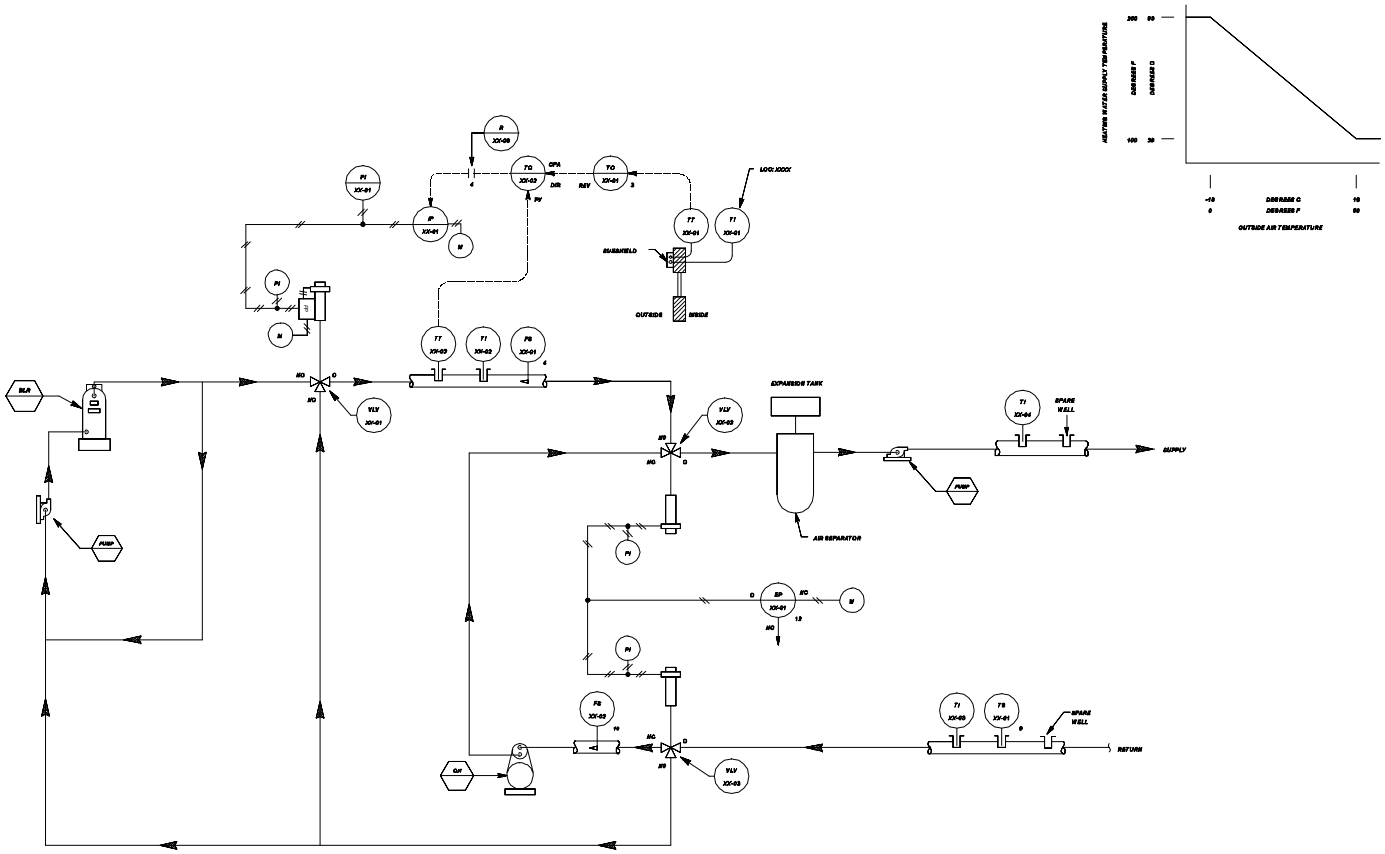

Figure 5-19a. Control system schematic for single building dual-temperature hydronic system with constant volume boiler loop.

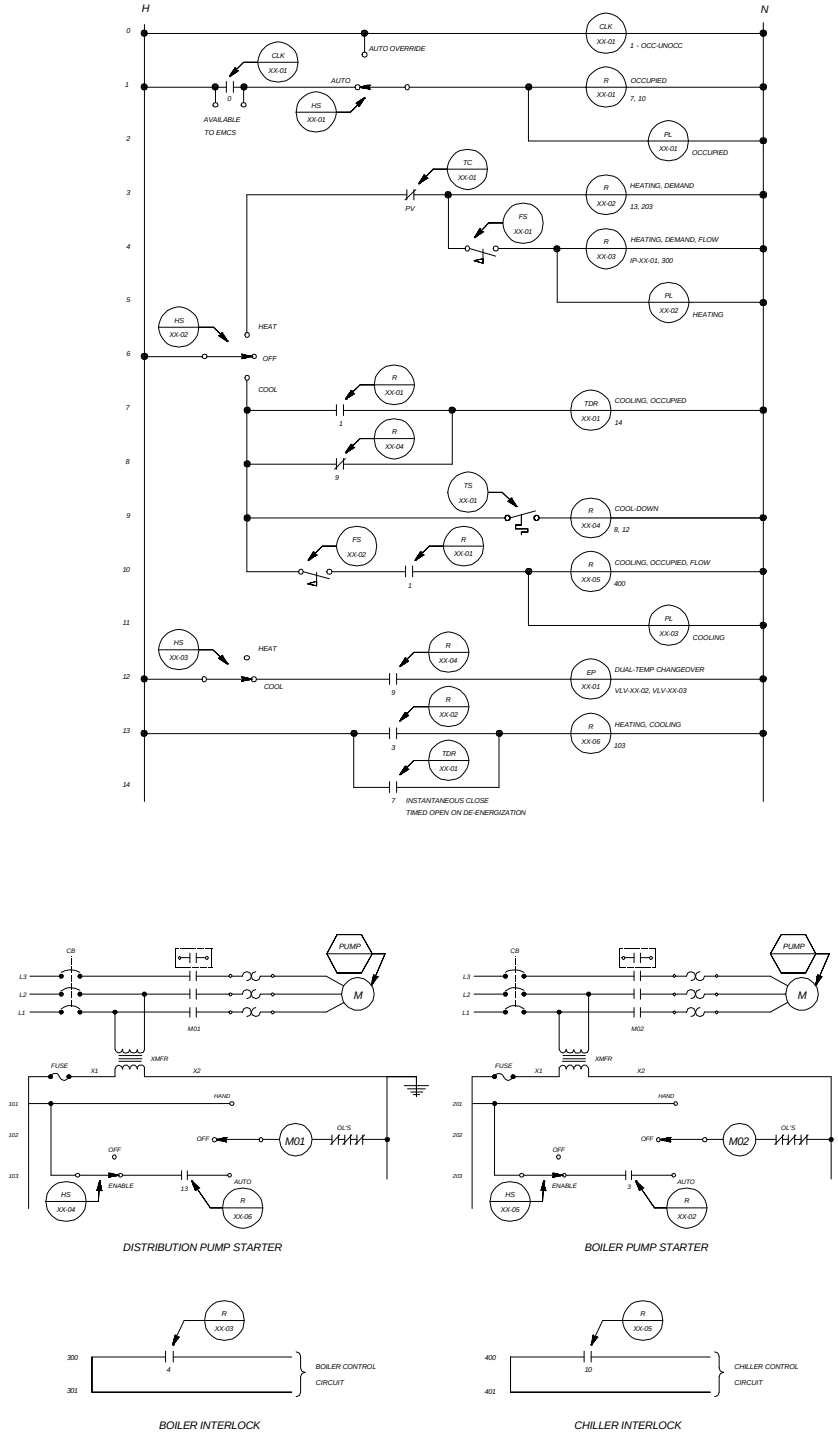

Figure 5-19b. Control system ladder diagram for single building dual-temperature hydronic system with constant volume boiler loop.

LOOP CONTROL FUNCTION	DEVICE NUMBER	DEVICE FUNCTION	SETPOINT	RANGE	ADDITIONAL PARAMETERS
DUAL-TEMP SUPPLY TEMPERATURE	VLV-XX-01	CONVERTER CONTROL VALVE	_____	21 - 103 kPa (3-15 PSIG)	Kv = 17.3 (Cv = 20) CLOSE AGAINST 70 kPa (10 PSIG)
	TC-XX-01	OUTSIDE-AIR TEMPERATURE CONTROLLER	-1 DEG C (30 DEG F) PROPORTIONAL BAND 37.5 % MANUAL RESET 50%	-35 TO +55 DEG C (-30 TO +130 DEG F)	PV CONTACT STARTS PUMP AT 16 DEG C (60 DEG F) STOPS PUMP AT 17 DEG C (62 DEG F)
	TC-XX-02	SYSTEM-SUPPLY TEMPERATURE CONTROLLER	OA TEMP = -18 DEG C (0 DEG F), HWS TEMP = 93 DEG C (200 DEG F) OA TEMP = 16 DEG C (60 DEG F), HWS TEMP = 38 DEG C (100 DEG F)	PV = 38 TO 121 DEG C (100 TO 250 DEG F) CPA = 38 TO 93 DEG C (100 TO 200 DEG F)	CPA LO-LIMIT = 38 DEG C (100 DEG F) CPA HI-LIMIT = 93 DEG C (200 DEG F)
	TT-XX-01	OUTSIDE-AIR TEMPERATURE TRANSMITTER	_____	-35 TO +55 DEG C (-30 TO +130 DEG F)	_____
	TT-XX-02	SYSTEM-SUPPLY TEMPERATURE TRANSMITTER	_____	38 TO 121 DEG C (100 TO 250 DEG F)	_____
DUAL-TEMP CHANGEOVER	TS-XX-01	SYSTEM RETURN CHANGEOVER THERMOSTAT	_____	-1 TO 116 DEG C (30 TO 240 DEG F)	CONTACT CLOSED AT 24 DEG C (75 DEG F) CONTACT OPEN AT 27 DEG C (80 DEG F)
	VLV-XX-02	SUPPLY CHANGEOVER VALVE	_____	2-POSITION	Kv = 6 (Cv = 7) CLOSE AGAINST 70 kPa (10 PSIG)
	VLV-XX-03	RETURN CHANGEOVER VALVE	_____	2-POSITION	Kv = 6 (Cv = 7) CLOSE AGAINST 70 kPa (10 PSIG)
	TDR-XX-01	TIME-DELAY RELAY	_____	_____	TIME DELAY = COORDINATE WITH CHILLER MANUFACTURER
OCCUPIED MODE	CLK-XX-01 CONTACT	365-DAY SCHEDULE	_____	NORMAL SCHEDULE (M - F) CONTACT CLOSED: 0700 HRS CONTACT OPEN: 1700 HRS	OPEN: SAT, SUN

NOTE : OTHER CONTROL DEVICES SUCH AS IPS AND RELAYS ARE NOT SHOWN

Figure 5-19c. Control system equipment for single building dual-temperature hydronic system with constant volume boiler loop.

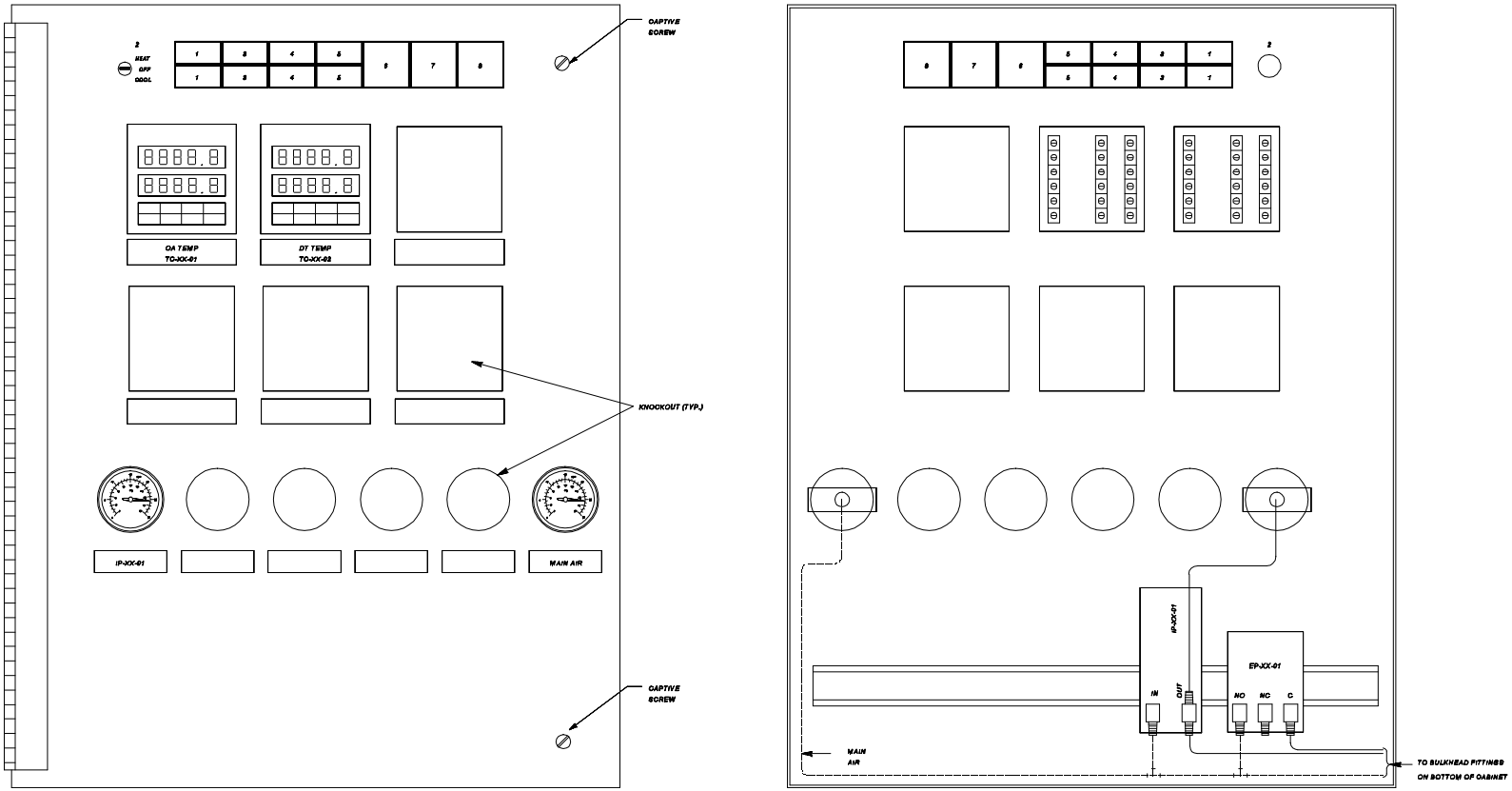

FRONT VIEW

REAR VIEW

SWITCH AND PILOT LIGHT LEGEND

POSITION LEGEND	DEVICE TYPE	IDENTIFIER	POSITION LEGEND	DEVICE TYPE	IDENTIFIER
1 - AUTO/AUTO OVERRIDE	ILLUMINATED MAINTAINED CONTACT INTERLOCKED SWITCHES	HS-XX-01	5 - ENABLE/OFF	ILLUMINATED MAINTAINED CONTACT INTERLOCKED SWITCHES	HS-XX-05
2 - HEAT/OFF/COOL	THREE-POSITION ROTARY SWITCH	HS-XX-02	6 - OCCUPIED	PILOT LIGHT	PL-XX-01
3 - HEAT/COOL	ILLUMINATED MAINTAINED CONTACT INTERLOCKED SWITCHES	HS-XX-03	7 - HEATING	PILOT LIGHT	PL-XX-02
4 - ENABLE/OFF	ILLUMINATED MAINTAINED CONTACT INTERLOCKED SWITCHES	HS-XX-04	8 - COOLING	PILOT LIGHT	PL-XX-03

Figure 5-19d. Control panel interior door layout for single building dual-temperature hydronic system with constant volume boiler loop.

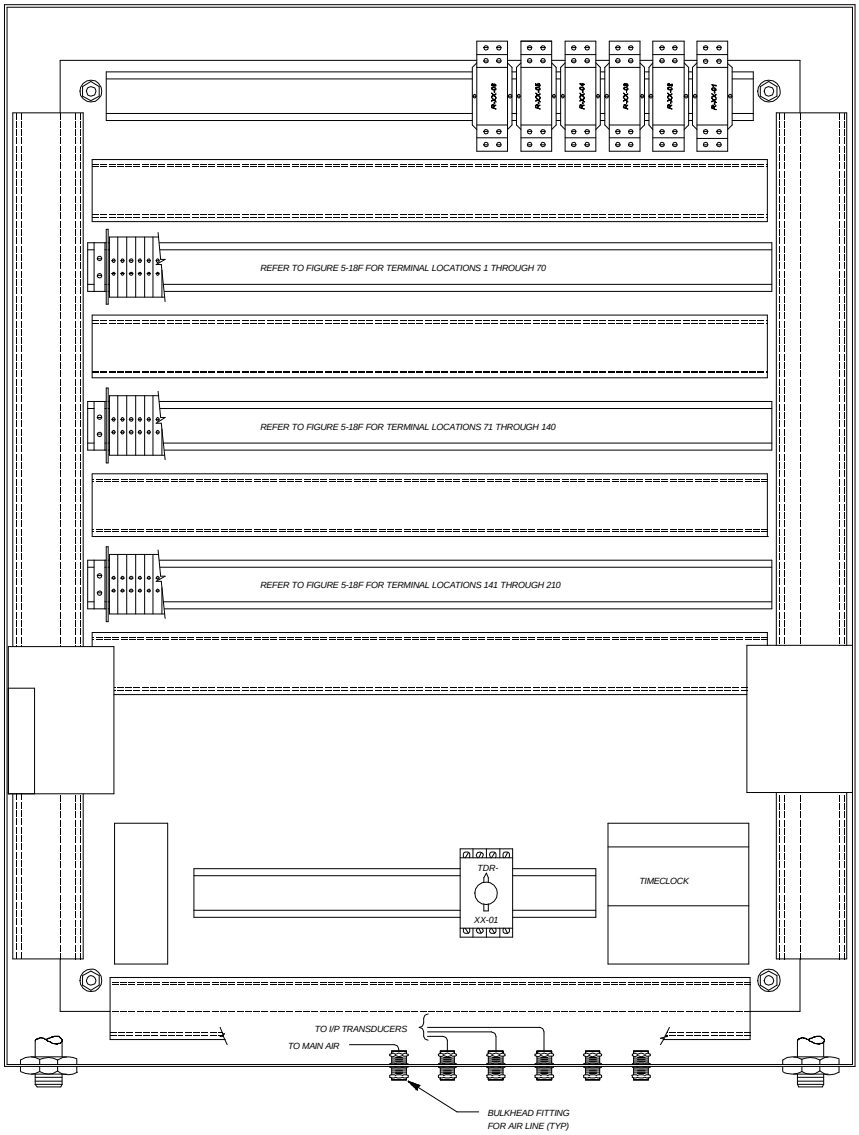

Figure 5-19e. Control panel back panel layout for single building dual-temperature hydronic system with constant volume boiler loop.

1-10	11-20	21-30	31-40	41-50	51-60	61-70
TC-XX-01 OUTSIDE AIR TEMPERATURE CONTROLLER TERMINAL BLOCKS	TC-XX-02 DUAL-TEMP SUPPLY TEMPERATURE CONTROLLER TERMINAL BLOCKS	RESERVED FOR CONTROLLER	RESERVED FOR CONTROLLER	RESERVED FOR CONTROLLER	RESERVED FOR CONTROLLER	RESERVED FOR CONTROLLER

71-80	81-84	85 - 90	91 - 100	101 - 110	111 - 120	121 - 130	131-132	133-140
RESERVED FOR CONTROLLER	CLK-XX-01 EMCS REPLACE-MENT	SPACE	SPACE	SPACE	SPACE	SPACE	TSL-XX-01	SPACE

141-170	171-180	181-190	191-200	201-210
120 V AC POWER DISTRIBUTION TERMINAL BLOCKS	24 V DC POWER DISTRIBUTION TERMINAL BLOCKS	PUMP-XX-01 STARTER CONTROL WIRING TERMINAL BLOCKS	PUMP-XX-02 STARTER CONTROL WIRING TERMINAL BLOCKS	SPACE

Figure 5-19f. Control panel terminal block layout for single building dual-temperature hydronic system with constant volume boiler loop.

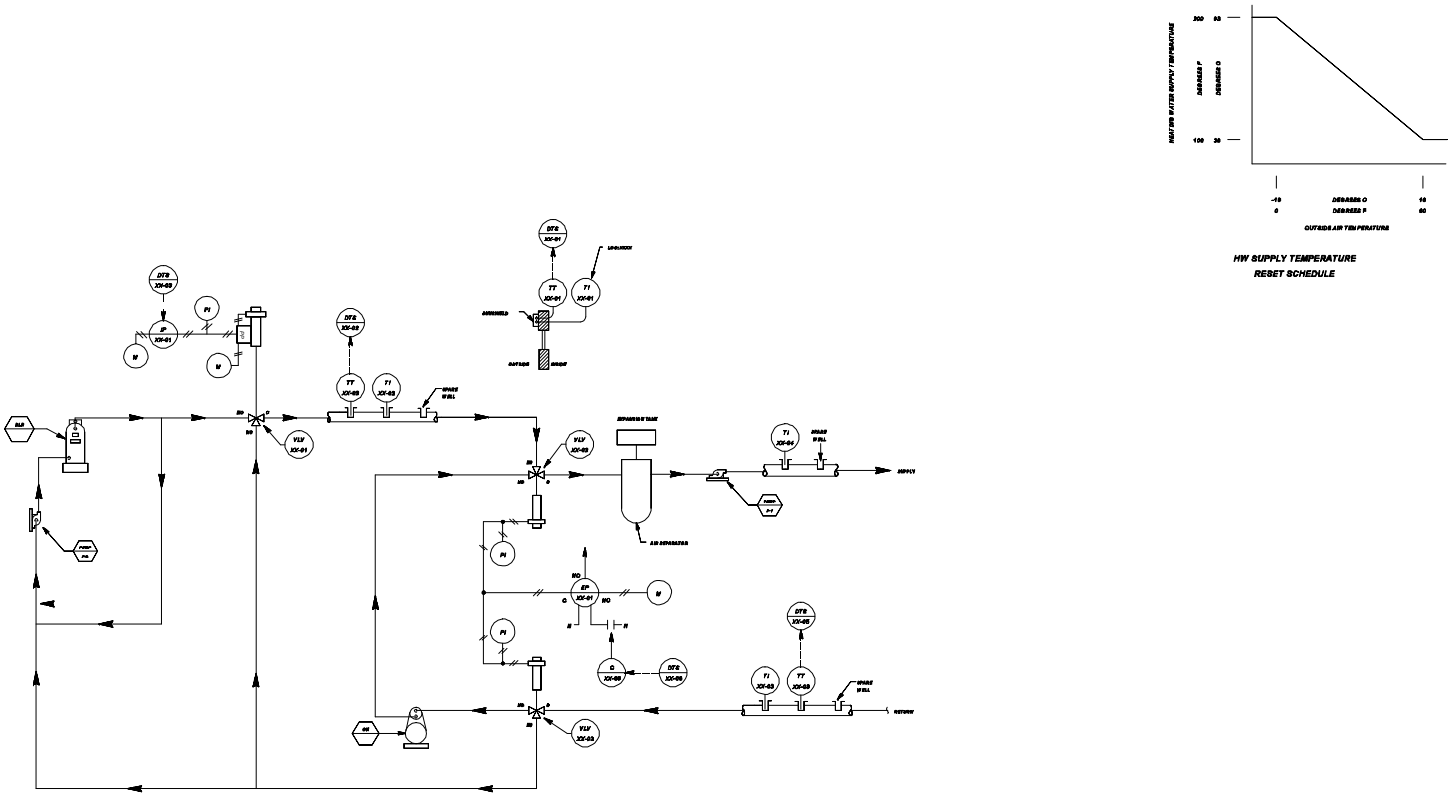

Figure 5-19g. DDC control system schematic for single building dual-temperature hydronic system with constant volume boiler loop.

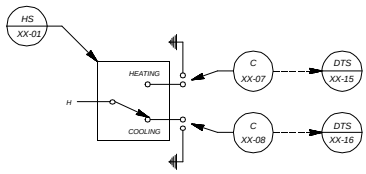

DUAL-TEMP MODE SELECTOR SWITCH
(See Note 1)

Notes:
1. HS-XX-01 shall be located adjacent to the DDC panel.

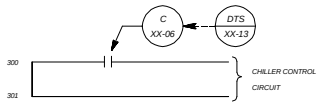

CHILLER INTERLOCK

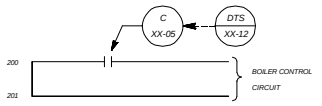

BOILER INTERLOCK

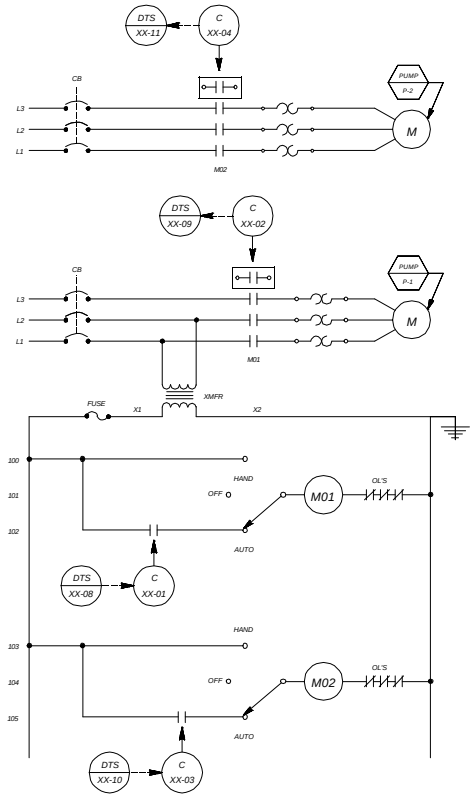

Figure 5-19h. DDC control system ladder diagram for single building dual-temperature hydronic system with constant volume boiler loop.

SENSOR SCHEDULE

IDENTIFIER	FUNCTION	RANGE
TT-XX-01	OUTSIDE AIR TEMPERATURE TRANSMITTER	-35 TO +55 DEG C (-30 TO +130 DEG F)
TT-XX-02	HEATING WATER SUPPLY TEMPERATURE TRANSMITTER	38 TO 121 DEG C (100 TO 250 DEG F)
TT-XX-03	DUAL-TEMP RETURN WATER TEMPERATURE TRANSMITTER	-1 TO 116 DEG C (30 TO 240 DEG F)

CONTROL VALVE SCHEDULE

IDENTIFIER	FUNCTION	TYPE	RANGE	Kv (Cv)	CLOSE-OFF RATING	REMARKS
VLV-XX-01	HW SUPPLY VALVE	3-WAY, MODULATING	21 - 103 kPa (3-15 PSIG)	XX	XX kPa (XX PSIG)	
VLV-XX-02	DUAL-TEMP SUPPLY CHANGEOVER VALVE	3-WAY, 2-POSITION		XX	XX kPa (XX PSIG)	
VLV-XX-03	DUAL-TEMP RETURN CHANGEOVER VALVE	3-WAY, 2-POSITION		XX	XX kPa (XX PSIG)	

OPERATING PARAMETERS

FUNCTION	SETPOINT	REMARKS
OUTSIDE AIR TEMPERATURE		START PUMPS AT OA TEMP = XX DEG C (XX DEG F) STOP PUMPS AT OA TEMP = XX DEG C (XX DEG F)
HEATING WATER SUPPLY TEMPERATURE	XX DEG C (XX DEG F)	OA TEMP = -18 DEG C (0 DEG F): HEATING WATER SUPPLY SETPOINT = 93 DEG C (200 DEG F) OA TEMP = 16 DEG C (60 DEG F): HEATING WATER SUPPLY SETPOINT = 38 DEG C (100 DEG F)
DUAL-TEMP CHANGEOVER	XX DEG C (XX DEG F)	DIFFERENTIAL = XX DEG C (XX DEG F)
OCCUPIED MODE		MONDAY - FRIDAY : 0705 HRS - 1700 HRS

Figure 5-19i. DDC control system equipment for single building dual-temperature hydronic system with constant volume boiler loop.

	HARDWARE																						SOFTWARE														
	OUTPUT											INPUT											ALARMS							APPLICATION PROGRAMS							
	DIGITAL						ANALOG					DIGITAL					ANALOG						DIGITAL				ANALOG										
	CONTROL RELAY						POSITION ADJUSTMENT	CONTROL POINT ADJUST.				AUXILIARY CONTACT	CONTACT CLOSURE					TEMPERATURE	CONTROL POINT ADJUST.	PSIG, PSIA, PSID	FLOW		CONTACT CLOSURE				HIGH LIMIT	LOW LIMIT	RUN TIME		SCHEDULED START/STOP	OPTIMUM START/STO	DUTY CYCLING	DEMAND LIMITING	HW OA RESET			FAILURE MODE **
OUTSIDE AIR																		1										X							X			
HW SUPPLY																		1									X	X							X			
HW SUPPLY VALVE							1																												X			
DUAL-TEMP RETURN																		1									X	X										
DUAL-TEMP CHANGEOVER VALVE	1																																					
DUAL-TEMP SELECTOR SWITCH													2										X															
DUAL-TEMP PUMP	1											1											X						X		X	X	X	X				
BOILER PUMP	1											1											X						X		X	X	X	X				
BOILER	1																												X		X	X						
CHILLER	1																												X		X	X		X				

** C - LAST COMMAND
H - HIGH VALUE
L - LOW VALUE

O - ON (OPEN)
F - OFF (CLOSED)

DDC DATA TERMINAL STRIP LAYOUT

	DEVICE NO.	DESCRIPTION	TYPE
1	TT-XX-01	OUTSIDE AIR TEMPERATURE	AI
2	TT-XX-02	HW SUPPLY TEMPERATURE	AI
3	IP-XX-01	HW SUPPLY VALVE	AO
4			
5	TT-XX-03	DUAL-TEMP RETURN TEMP.	AI
6	C-XX-09	DUAL-TEMP CHANGEOVER	DO
7			
8	C-XX-01	DUAL-TEMP PUMP START/STOP	DO
9	C-XX-02	DUAL-TEMP PUMP STATUS	DI
10	C-XX-03	BOILER PUMP START/STOP	DO
11	C-XX-04	BOILER PUMP STATUS	DI
12	C-XX-05	BOILER INTERLOCK	DO
13	C-XX-06	CHILLER INTERLOCK	DO
14			
15	C-XX-07	D.T. MODE SELECTION - HEAT	DI
16	C-XX-08	D.T. MODE SELECTION - COOL	DI
17			
18			
19			
20			
21			
22			
23			
24			
25			
26			
27			
28			
29			
30			

Figure 5-19j. DDC control system I/O table and data terminal strip layout for single building dual-temperature hydronic system with constant volume boiler loop.