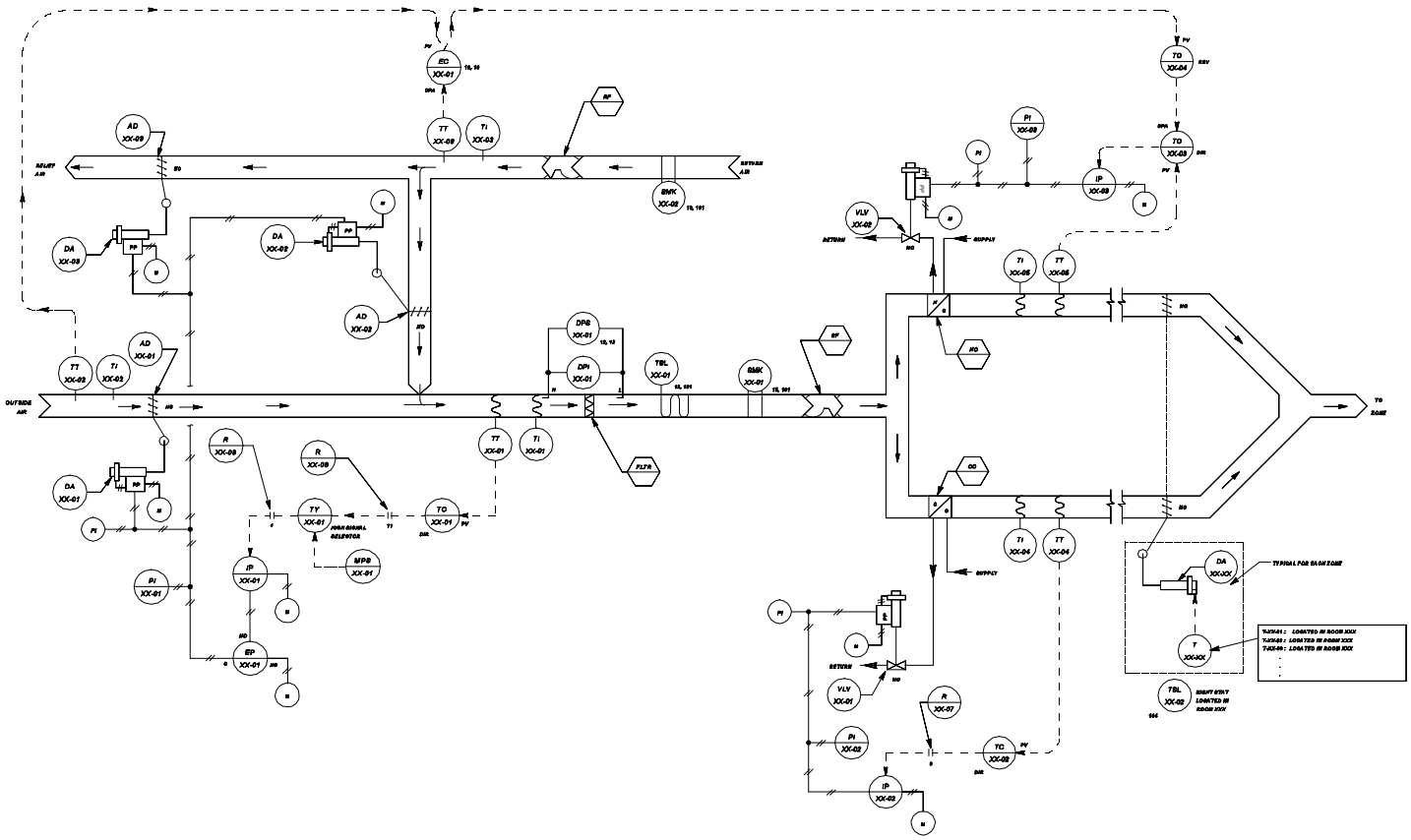

Figure 5-12a. Control system schematic for multizone HVAC system with building flush mode of operation.

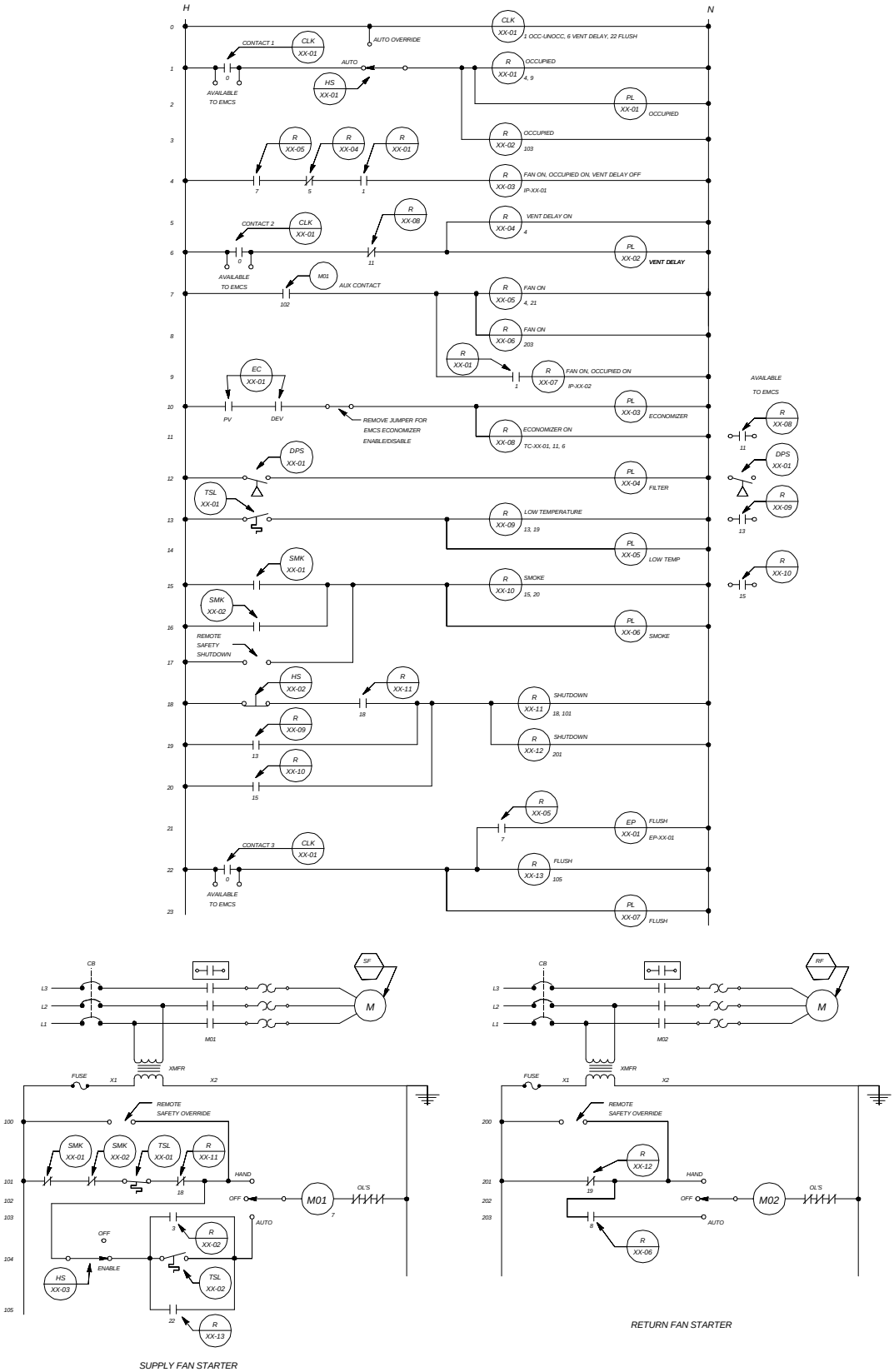

Figure 5-12b. Control system ladder diagram for multizone HVAC system with building flush mode of operation.

LOOP CONTROL FUNCTION	DEVICE NUMBER	DEVICE FUNCTION	SETPOINT	RANGE	ADDITIONAL PARAMETERS
MIXED AIR TEMPERATURE	DA-XX-01 DA-XX-02 DA-XX-03	DAMPER ACTUATOR	____	21-103 kPa (3 - 15 PSIG)	____
	MPS-XX-01	MINIMUM POSITION SWITCH	____	____	SET MIN OA L/s (CFM) EQUAL TO ___ L/s (___ CFM)
	TC-XX-01	MIXED AIR TEMPERATURE CONTROLLER	13 DEG C (55 DEG F)	4 TO 60 DEG C (40 TO 140 DEG F)	____
	TT-XX-01	MIXED AIR TEMPERATURE TRANSMITTER	____	4 TO 60 DEG C (40 TO 140 DEG F)	____
	TT-XX-02	OUTSIDE AIR TEMPERATURE TRANSMITTER	____	-34 TO 54 DEG C (-30 TO +130 DEG F)	____
	TT-XX-03	RETURN AIR TEMPERATURE TRANSMITTER	____	-34 TO 54 DEG C (-30 TO +130 DEG F)	____
	EC-XX-01	ECONOMIZER CONTROLLER	PV CONTACT CLOSE AT___ DEG C (___ DEG F) OPEN AT___ DEG C (___ DEG F)	-34 TO 54 DEG C (-30 TO +130 DEG F)	DEV CONTACT CLOSE @ DELTA T= ___ DEG C (___ DEG F) OPEN @ DELTA T= ___ DEG C (___ DEG F)
	TSL-XX-01	FREEZESTAT	2 DEG C (35 DEG F)	3 DEG C DIFFERENTIAL (5 DEG F DIFFERENTIAL)	____
	DPS-XX-01	FILTER ALARM	PER FILTER MANUFACTURER'S RECOMMENDATION	PER FILTER MANUFACTURER'S RECOMMENDATION	____
SPACE LOW TEMPERATURE	TSL-XX-02	NIGHT STAT - SPACE LOW TEMPERATURE PROTECTION	13 DEG C (55 DEG F)	3 DEG C DIFFERENTIAL (5 DEG F DIFFERENTIAL)	____
COLD DECK AIR TEMPERATURE	VLV-XX-01	COOLING COIL VALVE	____	21-103 kPa (3 - 15 PSIG)	Kv = ___ (Cv = ___) CLOSE AGAINST ___ kPa (___ PSIG)
	TC-XX-02	COLD DECK TEMPERATURE CONTROLLER	14 DEG C (57 DEG F)	4 TO 60 DEG C (40 TO 140 DEG F)	____
	TT-XX-04	COLD DECK TEMPERATURE TRANSMITTER	____	4 TO 60 DEG C (40 TO 140 DEG F)	____
HOT DECK AIR TEMPERATURE	VLV-XX-02	HEATING COIL VALVE	____	21-103 kPa (3 - 15 PSIG)	Kv = ___ (Cv = ___) CLOSE AGAINST ___ kPa (___ PSIG)
	TC-XX-03	HOT DECK TEMPERATURE CONTROLLER	OA TEMP = -18 DEG C (0 DEG F), HOT DECK = 49 DEG C (120 DEG F) OA TEMP = 16 DEG C (60 DEG F), HOT DECK = 32 DEG C (90 DEG F)	PV = 4 TO 60 DEG C (40 TO 140 DEG F) CPA = 32 TO 49 DEG C (90 TO 120 DEG F)	CPA LO-LIMIT = 32 DEG C (90 DEG F) CPA HI-LIMIT = 49 DEG C (120 DEG F)
	TC-XX-04	OUTSIDE AIR TEMPERATURE CONTROLLER	SET POINT = -1 DEG C (30 DEG F) PROPORTIONAL BAND = 87.5 % MANUAL RESET = 50 %	-34 TO 54 DEG C (-30 TO +130 DEG F)	____
	TT-XX-05	HOT DECK TEMPERATURE TRANSMITTER	____	4 TO 60 DEG C (40 TO 140 DEG F)	____
OCCUPIED MODE	CLK-XX-01 CONTACT 1	365 DAY SCHEDULE	____	NORMAL SCHEDULE (M-F) CONTACT CLOSED: 0705 HRS CONTACT OPEN: 1700 HRS	CONTACT OPEN: SAT, SUN
VENTILATION DELAY MODE	CLK-XX-01 CONTACT 2	365 DAY SCHEDULE	____	NORMAL SCHEDULE (M-F) CONTACT CLOSED: 0700 HRS CONTACT OPEN: 0800 HRS	
FLUSH MODE	CLK-XX-01 CONTACT 3	365 DAY SCHEDULE	____	NORMAL SCHEDULE (M-F) CONTACT CLOSED: 0600 HRS CONTACT OPEN: 0700 HRS	

NOTE: OTHER CONTROL DEVICES SUCH AS I/Ps, RELAYS, AND SIGNAL SELECTERS ARE NOT SHOWN.

Figure 5-12c. Control system equipment for multizone HVAC system with building flush mode of operation.

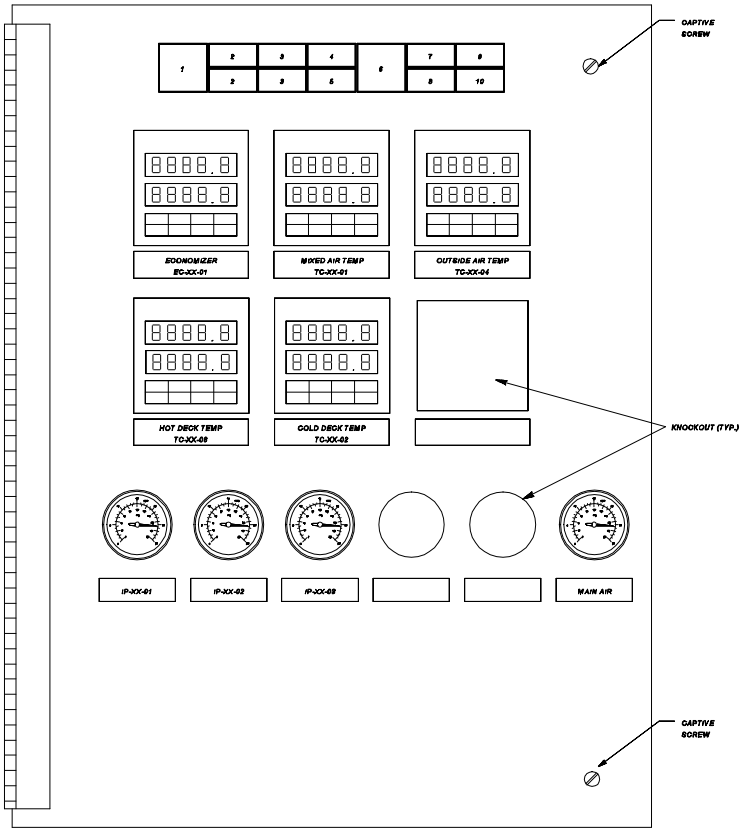

FRONT VIEW

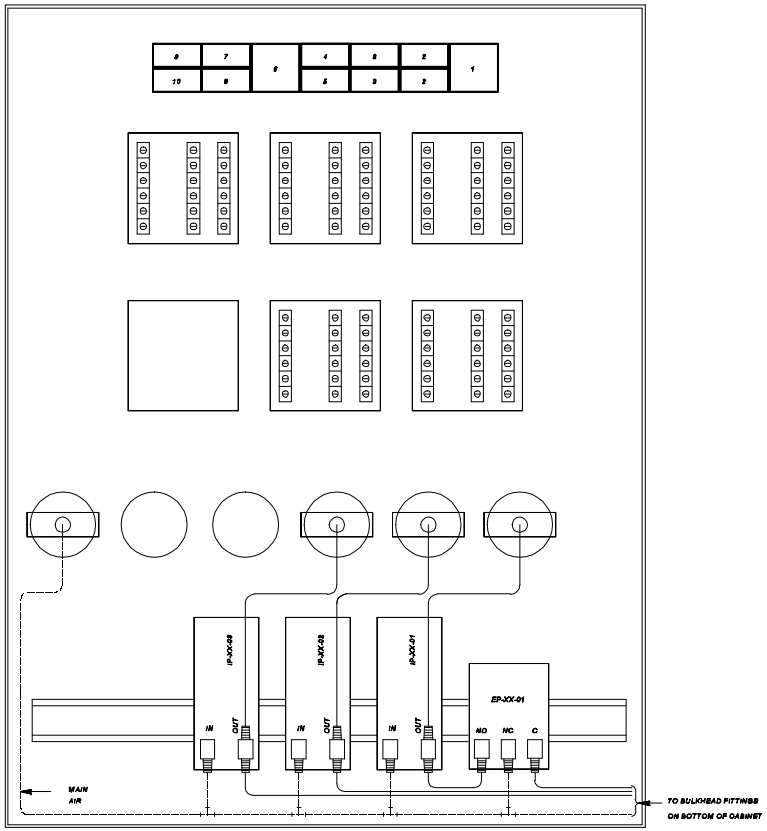

REAR VIEW

SWITCH AND PILOT LIGHT LEGEND

POSITION LEGEND	DEVICE TYPE	IDENTIFIER	POSITION LEGEND	DEVICE TYPE	IDENTIFIER
1 - RESET	NON-ILLUMINATED MOMENTARY CONTACT PUSH BUTTON SWITCH	HS-XX-02	6 - FILTER	PILOT LIGHT	PL-XX-04
2 - AUTO/AUTO OVERRIDE	ILLUMINATED MAINTAINED CONTACT INTERLOCKED SWITCHES	HS-XX-01	7 - OCC	PILOT LIGHT	PL-XX-01
3 - ENABLE/OFF	ILLUMINATED MAINTAINED CONTACT INTERLOCKED SWITCHES	HS-XX-03	8 - VENT DELAY	PILOT LIGHT	PL-XX-02
4 - LOW TEMP	PILOT LIGHT	PL-XX-05	9 - ECONOMIZER	PILOT LIGHT	PL-XX-03
5 - SMOKE	PILOT LIGHT	PL-XX-06	10 - FLUSH	PILOT LIGHT	PL-XX-07

Figure 5-12d. Control panel interior door layout for multizone HVAC system with building flush mode of operation.

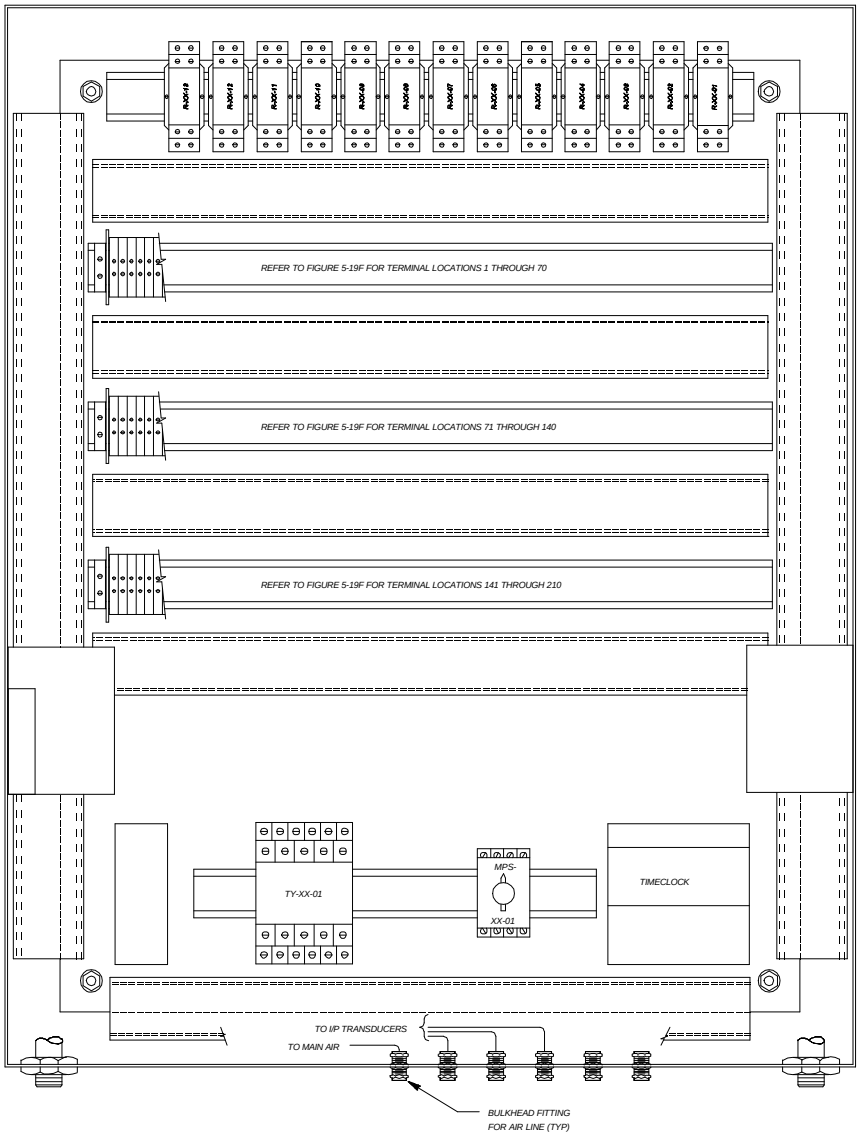

Figure 5-12e. Control panel back panel layout for multizone HVAC system with building flush mode of operation.

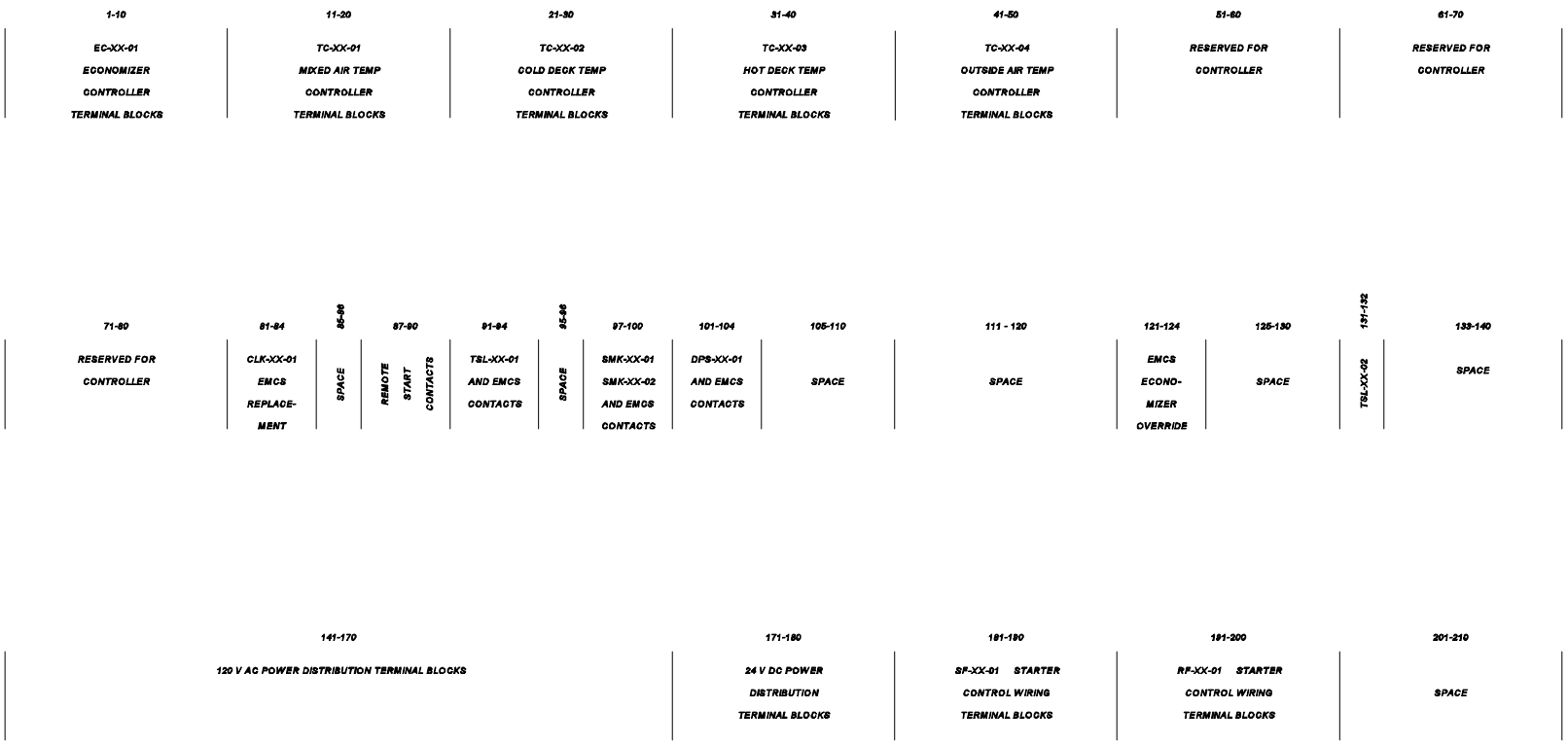

Figure 5-12f. Control panel terminal block layout for multizone HVAC system with building flush mode of operation.