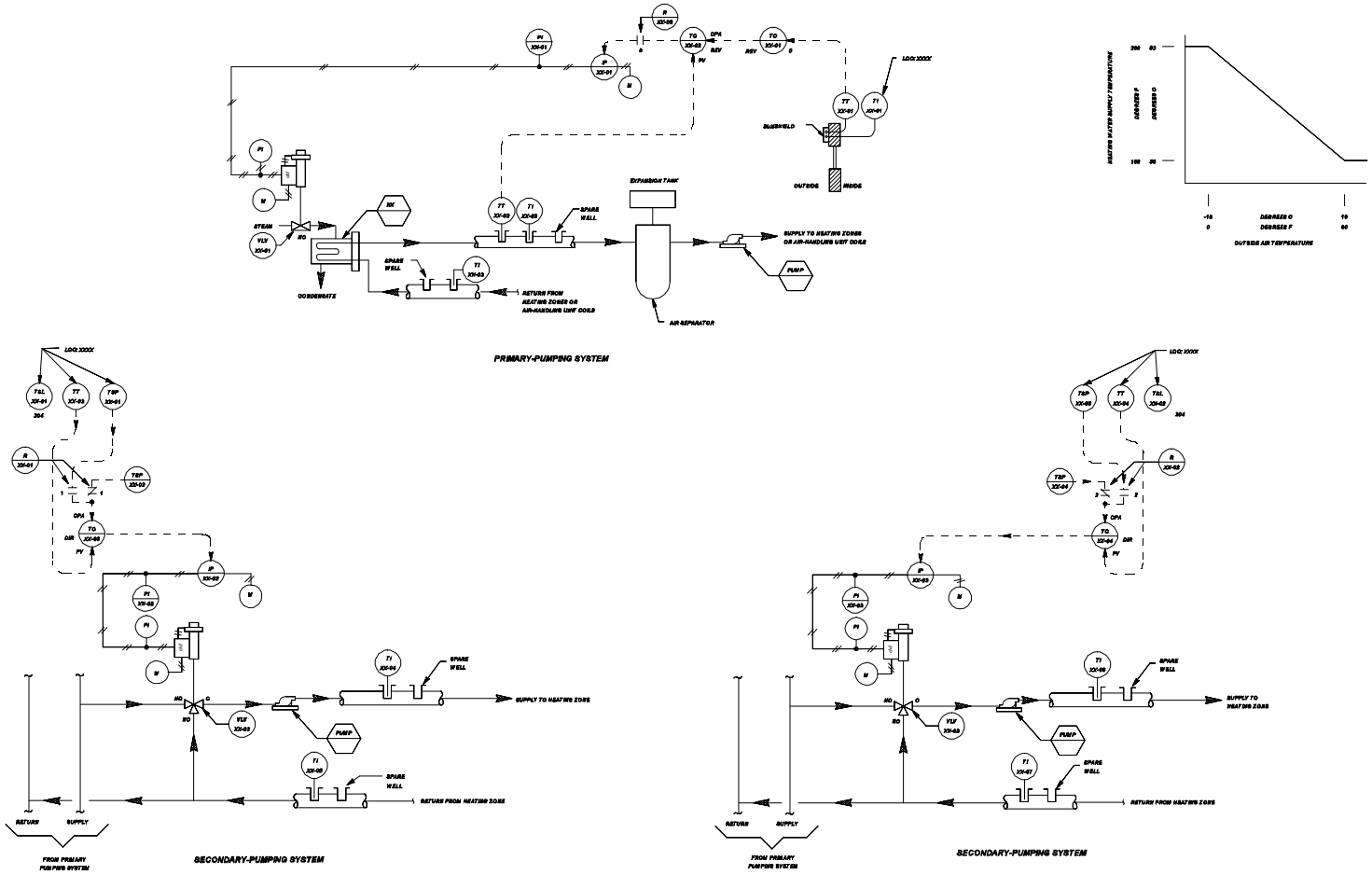

Figure 4-7a. Control system schematic for central plant steam hydronic system.

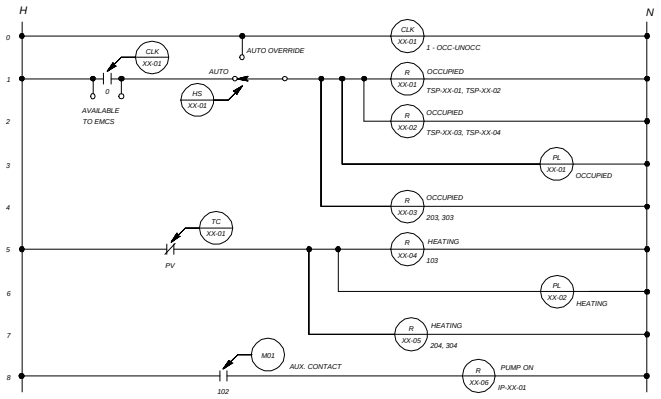

HEATING SYSTEM CONTROL PANEL

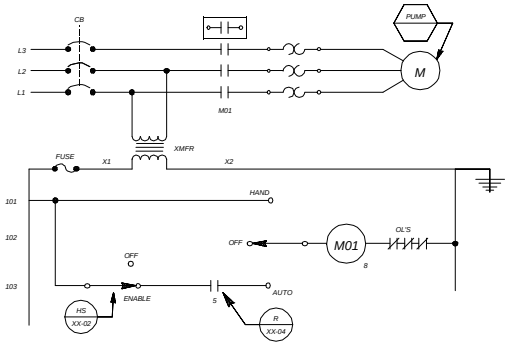

PRIMARY-PUMP STARTER

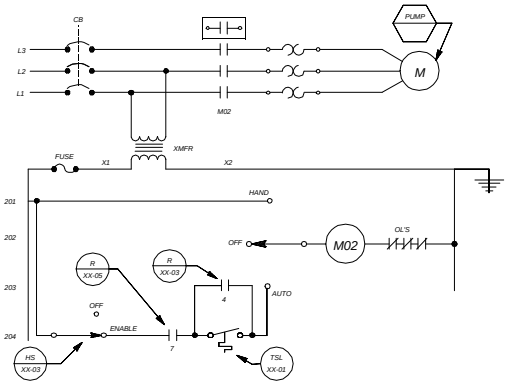

SECONDARY-PUMP STARTER

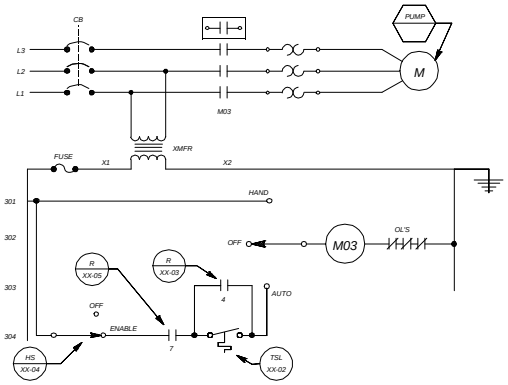

SECONDARY-PUMP STARTER

Figure 4-7b. Control system ladder diagram for central plant steam hydronic system.

LOOP CONTROL FUNCTION	DEVICE NUMBER	DEVICE FUNCTION	SETPOINT	RANGE	ADDITIONAL PARAMETERS
CONVERTER TEMPERATURE	VLV-XX-01	CONVERTER VALVE	_____	21 - 103 kPa (3-15 PSIG)	Kv = 17.3 (Cv = 20) CLOSE AGAINST 70 kPa (10 PSIG)
	TC-XX-01	OUTSIDE-AIR TEMPERATURE CONTROLLER	-1 DEG C (30 DEG F) PROPORTIONAL BAND 37.5% MANUAL RESET 50%	-35 TO +55 DEG C (-30 TO +130 DEG F)	PV CONTACT STARTS PUMP AT 16 DEG C (60 DEG F) STOPS PUMP AT 17 DEG C (62 DEG F)
	TC-XX-02	SYSTEM-SUPPLY TEMPERATURE CONTROLLER	OA TEMP = -18 DEG C (0 DEG F), HWS TEMP = 93 DEG C (200 DEG F) OA TEMP = 16 DEG C (60 DEG F), HWS TEMP = 38 DEG C (100 DEG F)	PV = 38 TO 121 DEG C (100 TO 250 DEG F) CPA = 38 TO 93 DEG C (100 TO 200 DEG F)	CPA LO-LIMIT = 38 DEG C (100 DEG F) CPA HI-LIMIT = 93 DEG C (200 DEG F)
	TT-XX-01	OUTSIDE-AIR TEMPERATURE TRANSMITTER	_____	-35 TO +55 DEG C (-30 TO +130 DEG F)	_____
	TT-XX-02	SYSTEM-SUPPLY TEMPERATURE TRANSMITTER	_____	38 TO 121 DEG C (100 TO 250 DEG F)	_____
SPACE TEMPERATURE	TT-XX-03	SPACE-TEMPERATURE TRANSMITTER	_____	10 TO 30 DEG C (50 TO 85 DEG F)	_____
	VLV-XX-02	ZONE VALVE	_____	21 - 103 kPa (3-15 PSIG)	Kv = 6 (Cv = 7) CLOSE AGAINST 70 kPa (10 PSIG)
	TC-XX-03	SPACE TEMPERATURE CONTROLLER	21 DEG C (70 DEG F)	10 TO 30 DEG C (50 TO 85 DEG F)	SET LIMITS AVAILABLE TO OCCUPANT BY TSP-XX-01 AT 18 TO 22 DEG C (65 TO 72 DEG F)
	TSP-XX-01	MANUAL SETPOINT ADJUSTMENT	4 MA = 10 DEG C (50 DEG F) 20 MA = 29 DEG C (85 DEG F)	_____	AVAILABLE TO OCCUPANT
	TSP-XX-02	MANUAL SETPOINT ADJUSTMENT	14 DEG C (57 DEG F)	_____	_____
SPACE LOW-LIMIT TEMPERATURE	TSL-XX-01	SPACE LOW-LIMIT THERMOSTAT	13 DEG C (55 DEG F)	_____	STARTS PUMP AT 13 DEG C (55 DEG F) STOPS PUMP AT 14 DEG C (57 DEG F)
SPACE TEMPERATURE	TT-XX-04	SPACE TEMPERATURE TRANSMITTER	_____	10 TO 30 DEG C (50 TO 85 DEG F)	_____
	VLV-XX-03	ZONE VALVE	_____	21 - 103 kPa (3-15 PSIG)	Kv = 6 (Cv = 7) CLOSE AGAINST 70 kPa (10 PSIG)
	TC-XX-04	SPACE TEMPERATURE CONTROLLER	21 DEG C (70 DEG F)	10 TO 30 DEG C (50 TO 85 DEG F)	SET LIMITS AVAILABLE TO OCCUPANT BY TSP-XX-03 AT 18 TO 22 DEG C (65 TO 72 DEG F)
	TSP-XX-03	MANUAL SETPOINT ADJUSTMENT	4 MA = 10 DEG C (50 DEG F) 20 MA = 29 DEG C (85 DEG F)	_____	AVAILABLE TO OCCUPANT
	TSP-XX-04	MANUAL SETPOINT ADJUSTMENT	14 DEG C (57 DEG F)	_____	_____
SPACE LOW-LIMIT TEMPERATURE	TSL-XX-02	SPACE LOW-LIMIT THERMOSTAT	13 DEG C (55 DEG F)	_____	STARTS PUMP AT 13 DEG C (55 DEG F) STOPS PUMP AT 14 DEG C (57 DEG F)
OCCUPIED MODE	CLK-XX-01 CONTACT	365-DAY SCHEDULE	_____	NORMAL SCHEDULE: M - F CONTACT CLOSED: 0700 HRS CONTACT OPEN: 1700 HRS	CONTACT OPEN: SAT, SUN

NOTE : OTHER CONTROL DEVICES SUCH AS IPS AND RELAYS ARE NOT SHOWN

Figure 4-7c. Control system equipment for central plant steam hydronic system.

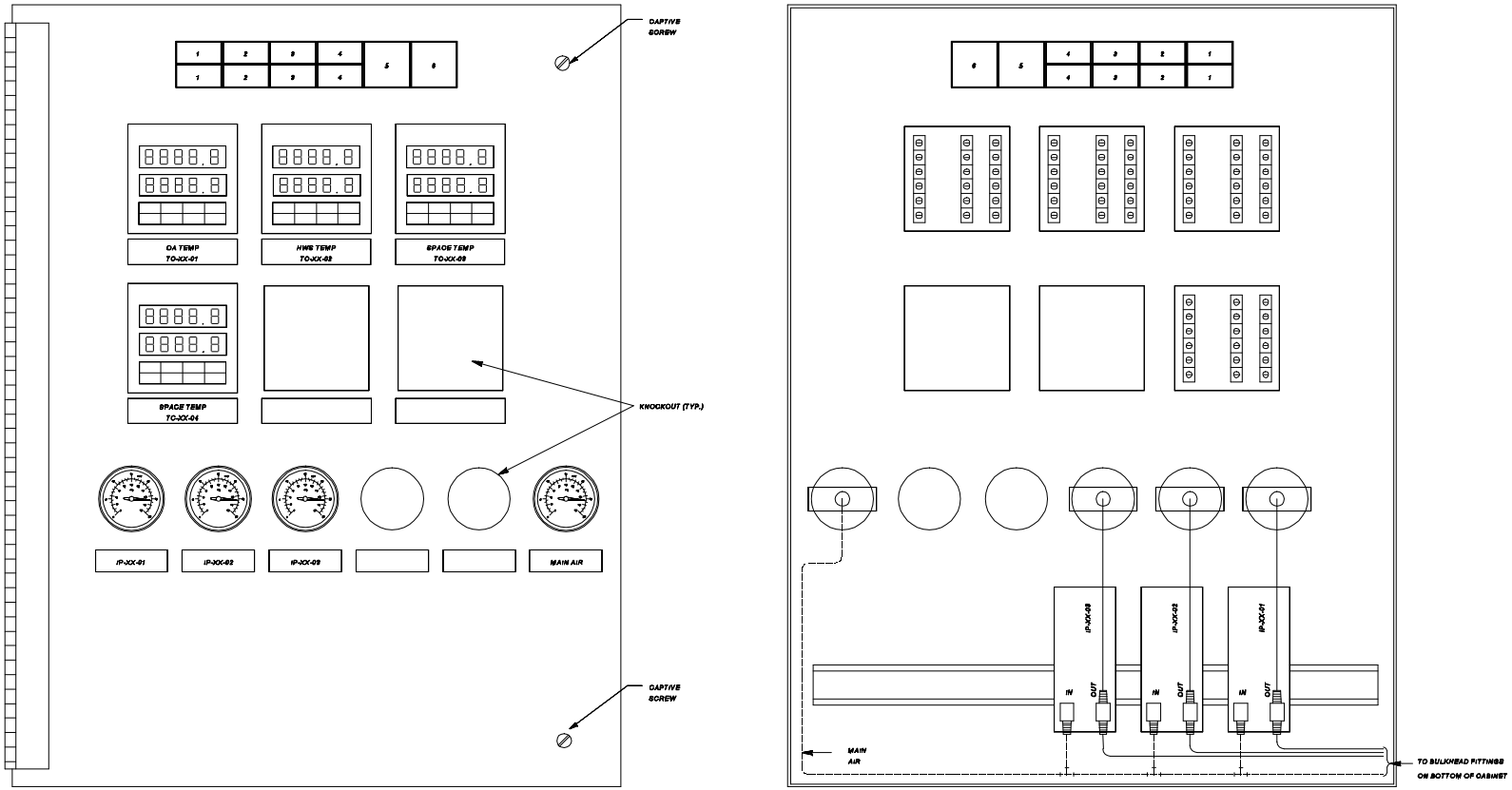

FRONT VIEW

REAR VIEW

SWITCH AND PILOT LIGHT LEGEND

POSITION LEGEND	DEVICE TYPE	IDENTIFIER	POSITION LEGEND	DEVICE TYPE	IDENTIFIER
1 - AUTO/AUTO OVERRIDE	ILLUMINATED MAINTAINED CONTACT INTERLOCKED SWITCHES	HS-XX-01	4 - ENABLE/OFF	ILLUMINATED MAINTAINED CONTACT INTERLOCKED SWITCHES	HS-XX-04
2 - ENABLE/OFF	ILLUMINATED MAINTAINED CONTACT INTERLOCKED SWITCHES	HS-XX-02	5 - OCCUPIED	PILOT LIGHT	PL-XX-01
3 - ENABLE/OFF	ILLUMINATED MAINTAINED CONTACT INTERLOCKED SWITCHES	HS-XX-03	6 - HEATING	PILOT LIGHT	PL-XX-02

Figure 4-7d. Control panel interior door layout for central plant steam hydronic system.

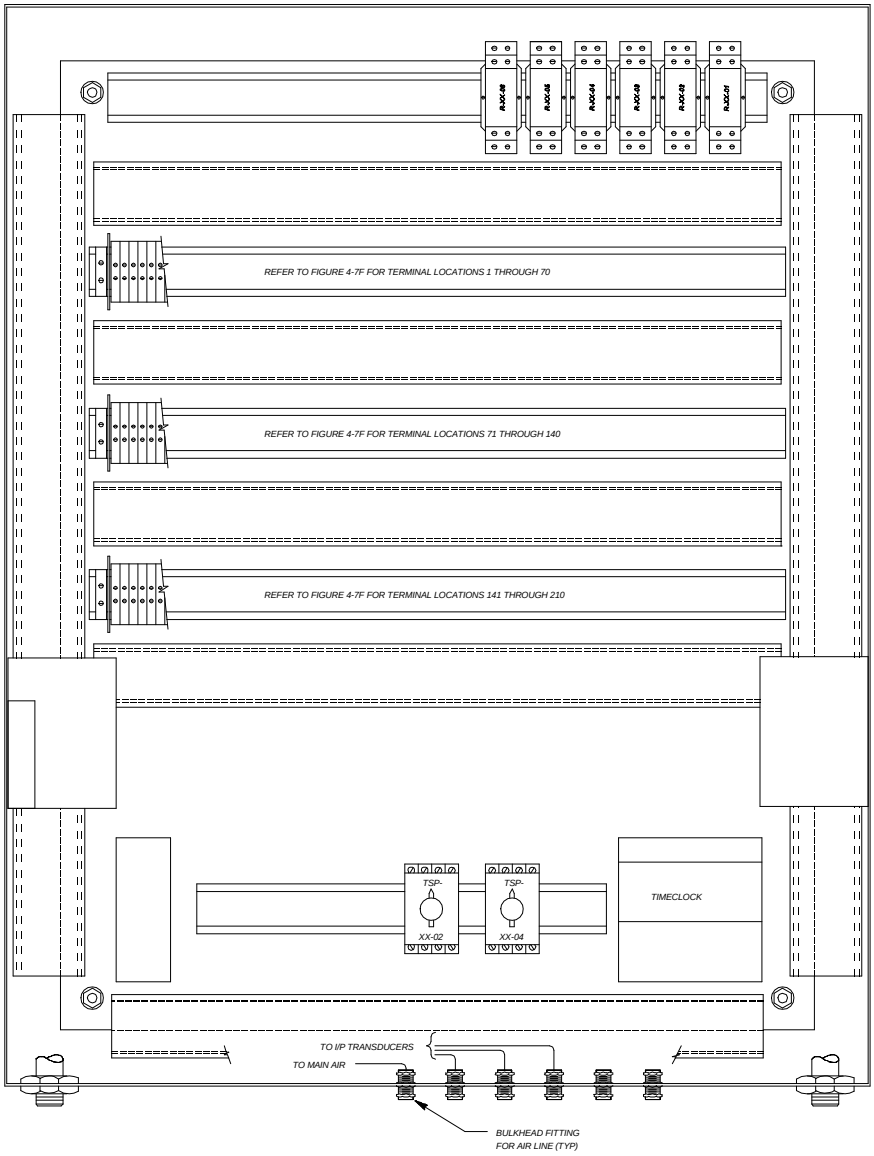

Figure 4-7e. Control panel back panel layout for central plant steam hydronic system.

1-10	11-20	21-30	31-40	41-50	51-60	61-70
TC-XX-01 OUTSIDE AIR TEMPERATURE CONTROLLER TERMINAL BLOCKS	TC-XX-02 HOT WATER SUPPLY TEMPERATURE CONTROLLER TERMINAL BLOCKS	TC-XX-03 SPACE TEMPERATURE CONTROLLER TERMINAL BLOCKS	TC-XX-04 SPACE TEMPERATURE CONTROLLER TERMINAL BLOCKS	RESERVED FOR CONTROLLER	RESERVED FOR CONTROLLER	RESERVED FOR CONTROLLER

71-80	81-84	85 - 90	91 - 100	101 - 110	111 - 120	121 - 130	131-132	133-134	135-140
RESERVED FOR CONTROLLER	CLK-XX-01 EMCS REPLACE-MENT	SPACE	SPACE	SPACE	SPACE	SPACE	TSL-XX-01	TSL-XX-02	SPACE

141-170	171-180	181-190	191-200	201-210
120 V AC POWER DISTRIBUTION TERMINAL BLOCKS	24 V DC POWER DISTRIBUTION TERMINAL BLOCKS	PUMP-XX-01 STARTER CONTROL WIRING TERMINAL BLOCKS	PUMP-XX-02 STARTER CONTROL WIRING TERMINAL BLOCKS	PUMP-XX-03 STARTER CONTROL WIRING TERMINAL BLOCKS

Figure 4-7f. Control panel terminal block layout for central plant steam hydronic system.

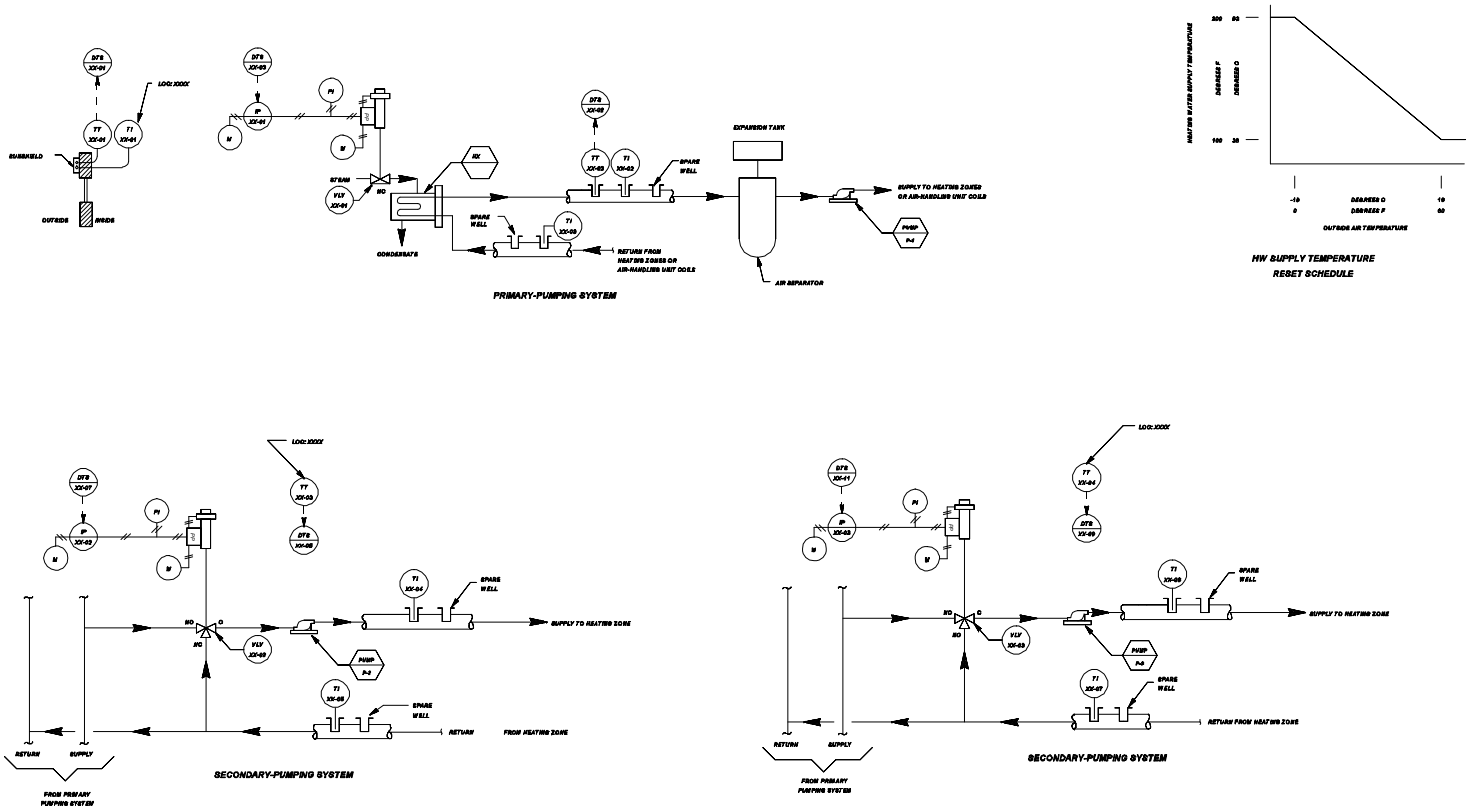

Figure 4-7g. DDC control system schematic for central plant steam hydronic system.

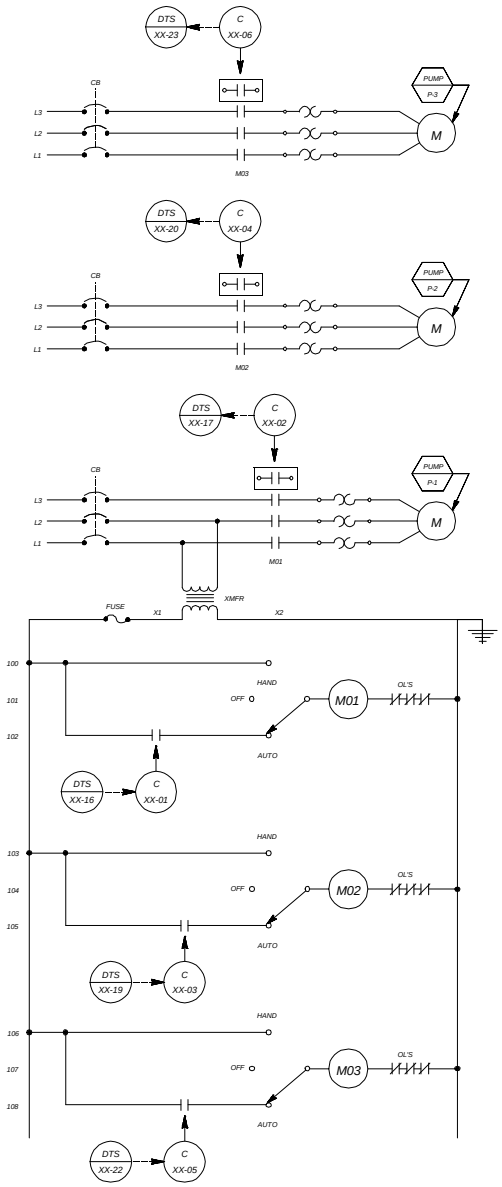

Figure 4-7h. DDC control system ladder diagram for central plant steam hydronic system.

SENSOR SCHEDULE

IDENTIFIER	FUNCTION	RANGE
TT-XX-01	OUTSIDE AIR TEMPERATURE TRANSMITTER	-35 TO +55 DEG C (-30 TO +130 DEG F)
TT-XX-02	PRIMARY SYSTEM SUPPLY TEMPERATURE TRANSMITTER	38 TO 121 DEG C (100 TO 250 DEG F)
TT-XX-03	SPACE TEMPERATURE TRANSMITTER	10 TO 30 DEG C (50 TO 85 DEG F)
TT-XX-04	SPACE TEMPERATURE TRANSMITTER	10 TO 30 DEG C (50 TO 85 DEG F)

CONTROL VALVE SCHEDULE

IDENTIFIER	FUNCTION	TYPE	RANGE	Kv (Cv)	CLOSE-OFF RATING	REMARKS
VLV-XX-01	CONVERTER STEAM VALVE	2-WAY, MODULATING	21 - 103 kPa (3-15 PSIG)	XX	XX kPa (XX PSIG)	
VLV-XX-02	ZONE VALVE	3-WAY, MODULATING	21 - 103 kPa (3-15 PSIG)	XX	XX kPa (XX PSIG)	
VLV-XX-03	ZONE VALVE	3-WAY, MODULATING	21 - 103 kPa (3-15 PSIG)	XX	XX kPa (XX PSIG)	

OPERATING PARAMETERS

FUNCTION	SETPOINT	REMARKS
OUTSIDE AIR TEMPERATURE		START PRIMARY PUMP AT OA TEMP = XX DEG C (XX DEG F) STOP PRIMARY PUMP AT OA TEMP = XX DEG C (XX DEG F)
PRIMARY SYSTEM SUPPLY TEMPERATURE	XX DEG C (XX DEG F)	OA TEMP = -18 DEG C (0 DEG F): PRIMARY SYSTEM SUPPLY SETPOINT = 93 DEG C (200 DEG F) OA TEMP = 16 DEG C (60 DEG F): PRIMARY SYSTEM SUPPLY SETPOINT = 38 DEG C (100 DEG F)
SPACE TEMP. (OCCUPIED)	XX DEG C (XX DEG F)	
SPACE TEMP. (UNOCCUPIED)	XX DEG C (XX DEG F)	
OCCUPIED MODE		MONDAY - FRIDAY : 0705 HRS - 1700 HRS

Figure 4-7i. DDC control system equipment for central plant steam hydronic system.

	HARDWARE																							SOFTWARE																
	OUTPUT												INPUT											ALARMS								APPLICATION PROGRAMS								
	DIGITAL						ANALOG						DIGITAL						ANALOG					DIGITAL				ANALOG												
	CONTROL RELAY						POSITION ADJUSTMENT	CONTROL POINT ADJUST.					AUXILARY CONTACT						TEMPERATURE	CONTROL POINT ADJUST.	PRES, PSIA, PSID	FLOW		CONTACT CLOSURE				HIGH LIMIT	LOW LIMIT	RUN TIME		SCHEDULED START/STOP	OPTIMUM START/STOP	DUTY CYCLING	DEMAND LIMITING			HW OA RESET		FAILURE MODE **
OUTSIDE AIR																			1																				X		
PRIMARY SYSTEM HW SUPPLY																			1									X	X												
ZONE																			1									X	X												
ZONE																			1									X	X												
CONVERTER VALVE							1																																		
ZONE VALVE							1																																		
ZONE VALVE							1																																		
PRIMARY PUMP	1												1											X						X		X	X	X	X					
ZONE PUMP	1												1											X						X		X	X	X	X					
ZONE PUMP	1												1											X						X		X	X	X	X					

** C - LAST COMMAND
H - HIGH VALUE
L - LOW VALUE

O - ON (OPEN)
F - OFF (CLOSED)

DDC DATA TERMINAL STRIP LAYOUT

	DEVICE NO.	DESCRIPTION	TYPE
1	TT-XX-01	OUTSIDE AIR TEMPERATURE	AI
2	TT-XX-02	PRIMARY SYSTEM SUPPLY TEMP.	AI
3	IP-XX-01	CONVERTER VALVE	AO
4			
5	TT-XX-03	SPACE TEMPERATURE	AI
6			
7	IP-XX-02	ZONE VALVE	AO
8			
9	TT-XX-04	SPACE TEMPERATURE	AI
10			
11	IP-XX-03	ZONE VALVE	AO
12			
13			
14			
15			
16	C-XX-01	PRIMARY PUMP START/STOP	DO
17	C-XX-02	PRIMARY PUMP STATUS	DI
18			
19	C-XX-03	ZONE PUMP START/STOP	DO
20	C-XX-04	ZONE PUMP STATUS	DI
21			
22	C-XX-05	ZONE PUMP START/STOP	DO
23	C-XX-06	ZONE PUMP STATUS	DI
24			
25			
26			
27			
28			
29			
30			

Figure 4-7j. DDC control system I/O table and data terminal strip layout for central plant steam hydronic system.