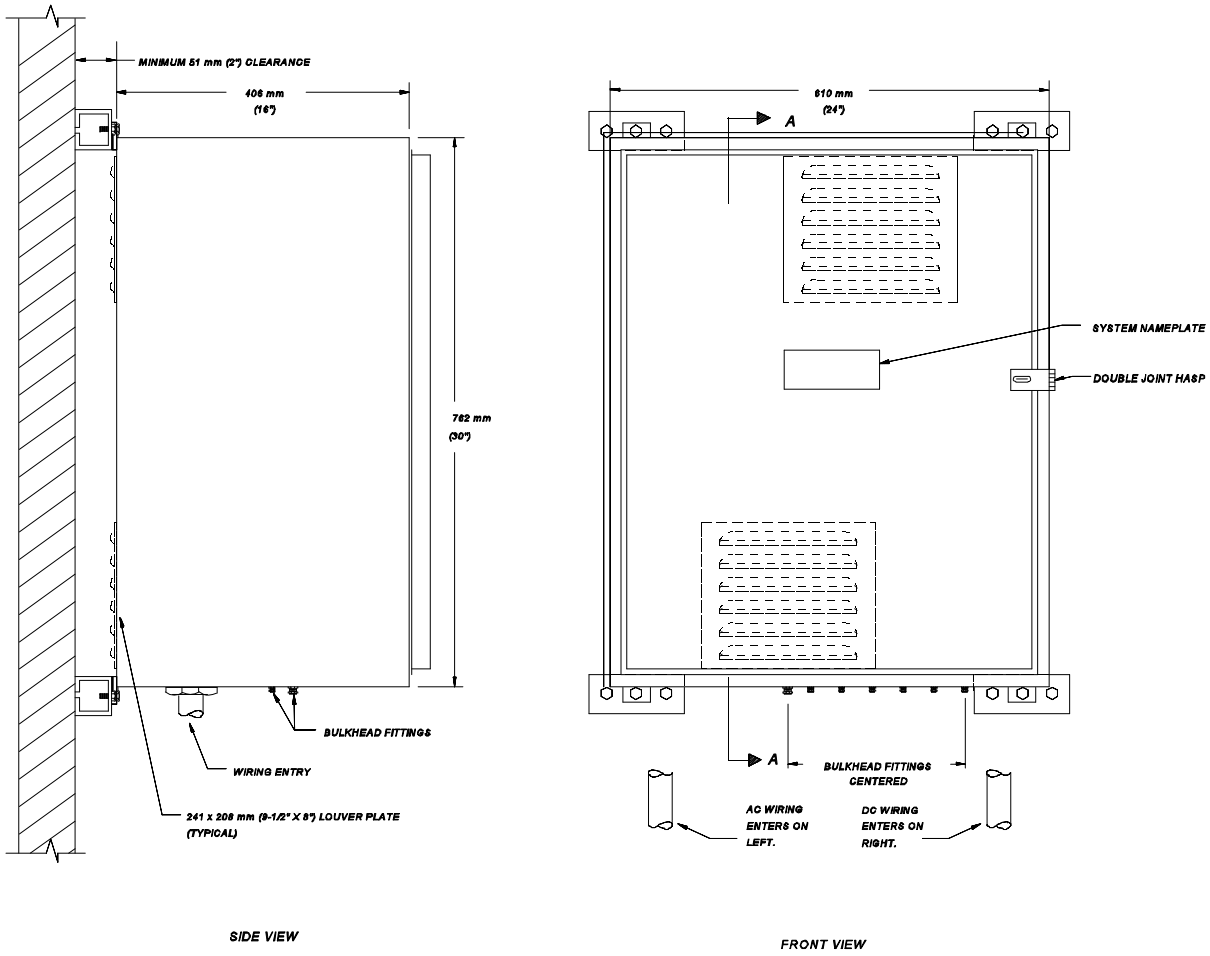

Figure 4-6a. Standard wall-mounted HVAC control panel arrangement.

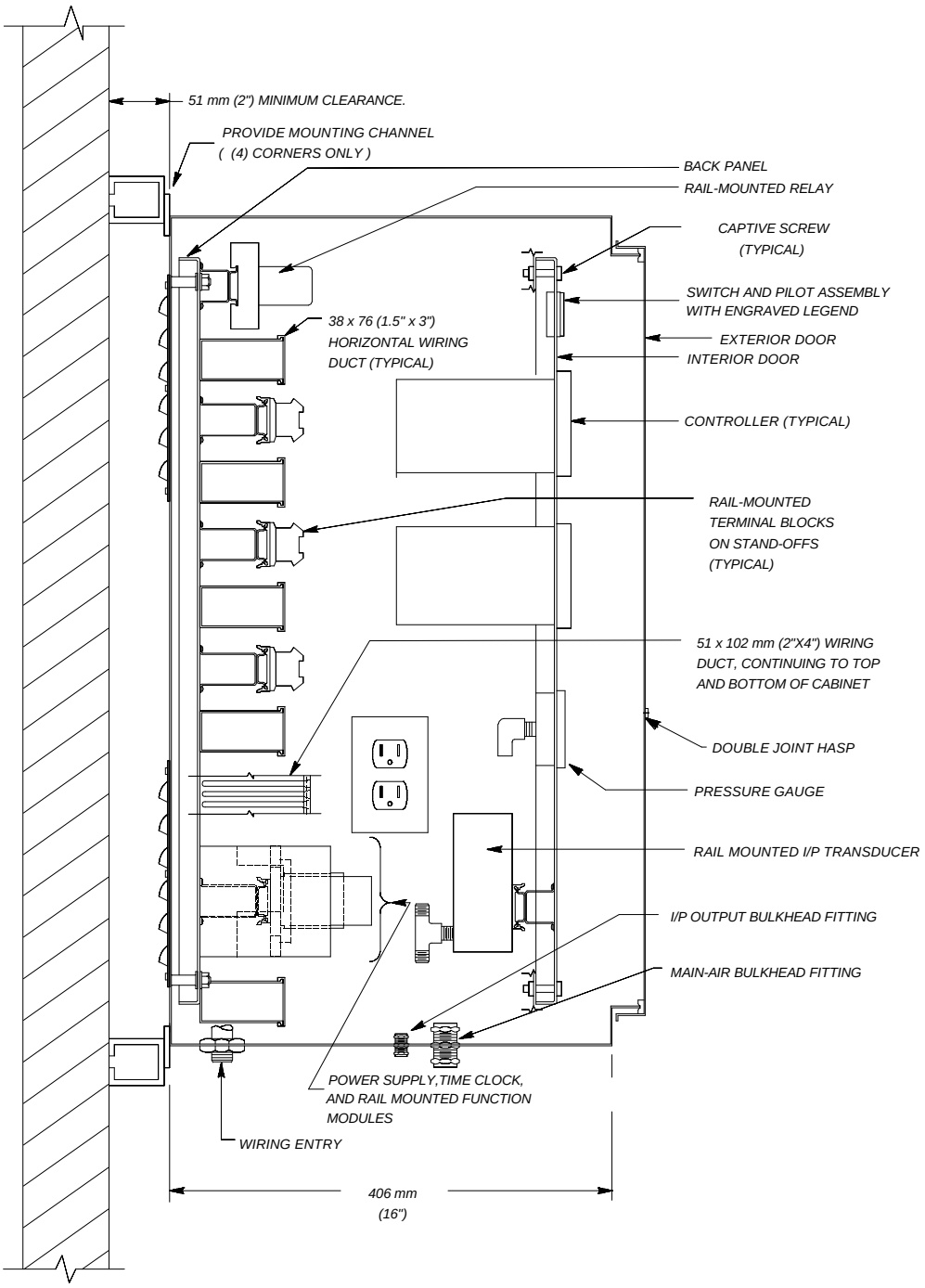

Figure 4-6b. Section “A-A” through standard HVAC control panel.

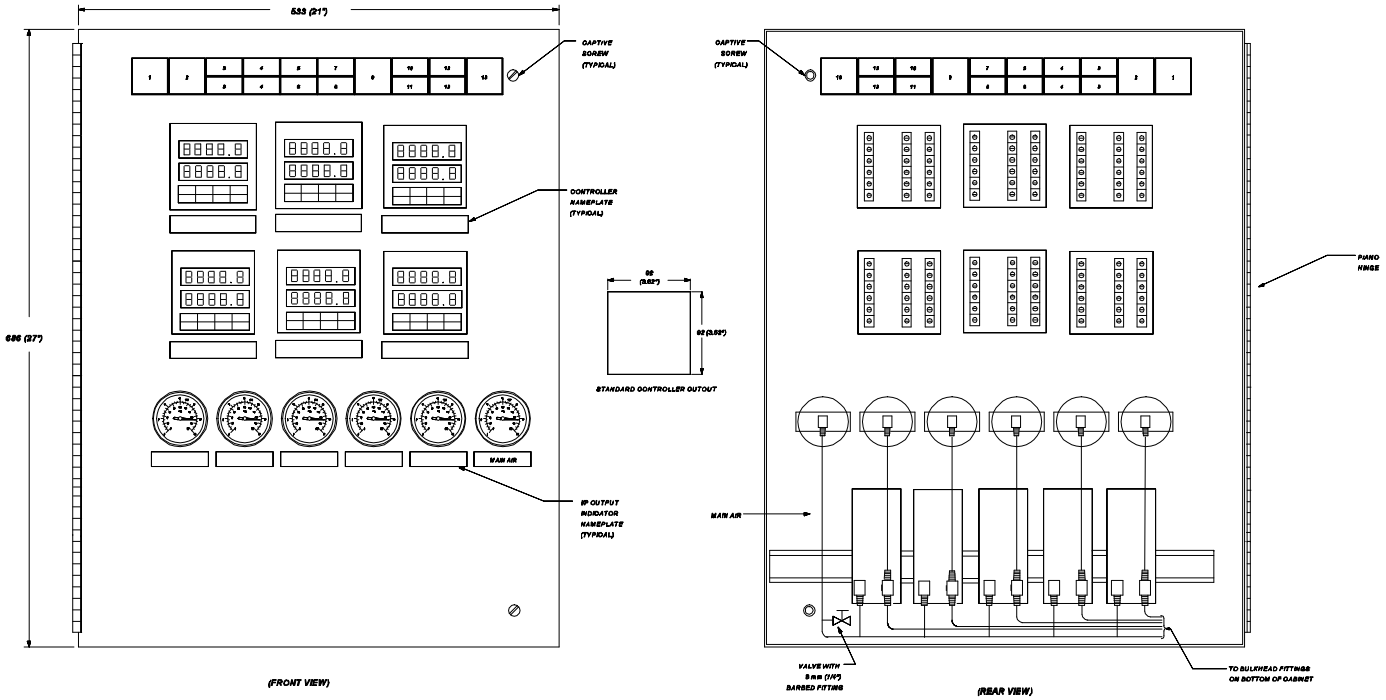

SWITCH AND PILOT LIGHT LEGEND

POSITION LEGEND	DEVICE TYPE	POSITION LEGEND	DEVICE TYPE	POSITION LEGEND	DEVICE TYPE
1 - RESET	NON-ILLUMINATED MOMENTARY PUSHBUTTON SWITCH	5 - LOW TEMP	PILOT LIGHT	9 - OOO	PILOT LIGHT
2 - STATIC RESET	NON-ILLUMINATED MOMENTARY PUSHBUTTON SWITCH	6 - SMOKE	PILOT LIGHT	10 - VENT DELAY	PILOT LIGHT
3 - AUTO/AUTO OVERRIDE	ILLUMINATED MAINTAINED-CONTACT INTERLOCKED SWITCHES	7 - HIGH STATIC	PILOT LIGHT	11 - ECON	PILOT LIGHT
4 - ENABLE/OFF	ILLUMINATED MAINTAINED-CONTACT INTERLOCKED SWITCHES	8 - FILTER	PILOT LIGHT	12 - HEAT/COOL	ILLUMINATED MAINTAINED-CONTACT INTERLOCKED SWITCHES
				13 -	ASSIGNABLE

Figure 4-6c. Standard HVAC control panel interior door.

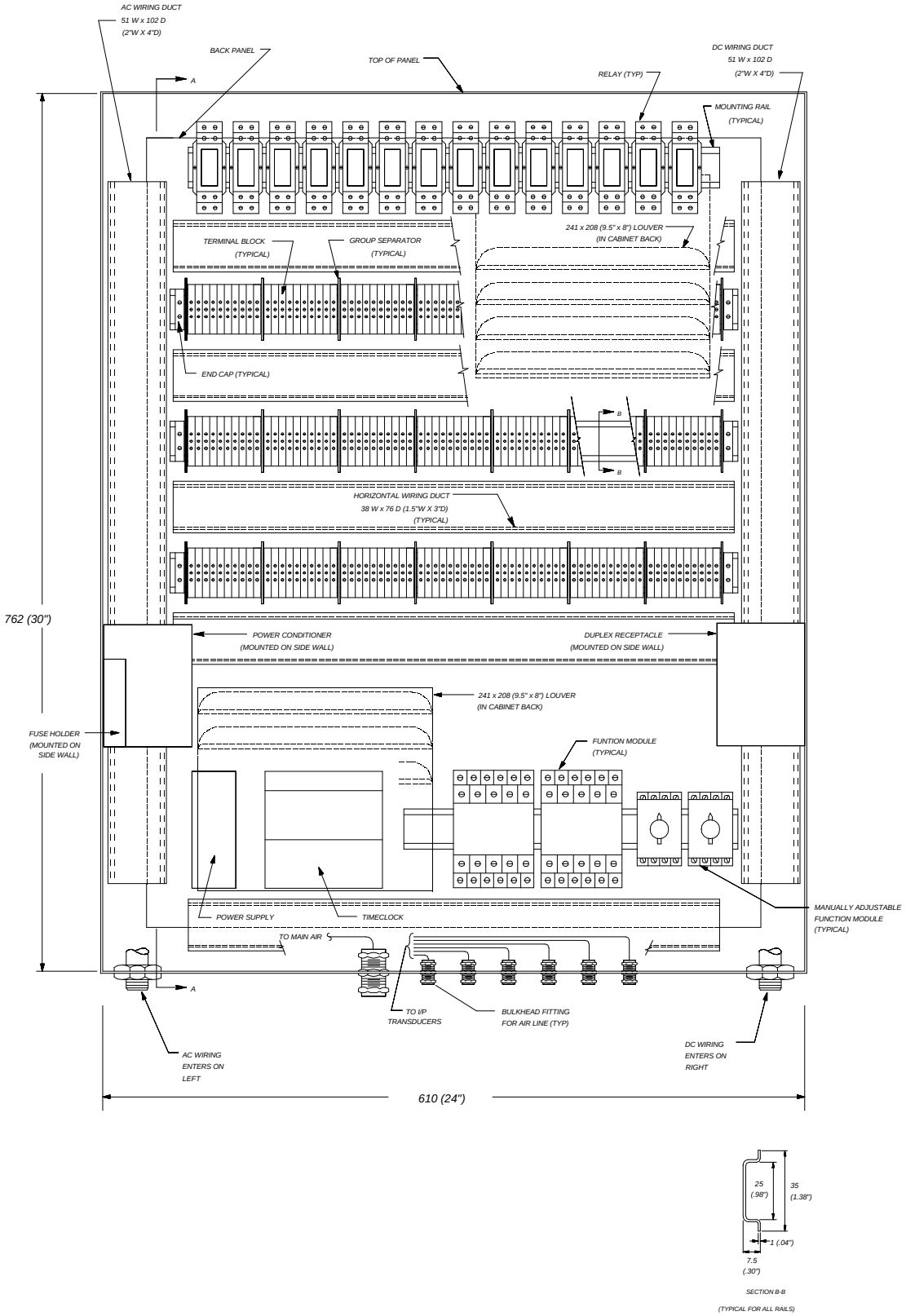

Figure 4-6d. Standard HVAC control panel back panel layout.

1-10	11-20	21-30	31-40	41-50	51-60	61-70
CONTROLLER	CONTROLLER	CONTROLLER	CONTROLLER	CONTROLLER	CONTROLLER	SPACE

71-80	81-90	91-100	101-110	111-120	121-130	131-140
SPACE	EMCS START/STOP INTERLOCKS	LOW-TEMP TSTAT SMOKE DET & EMCS	FILTER DPS & EMCS	DUCT STATIC-PRESSURE SWITCH	EMCS ECONOMIZER OVERRIDE	NIGHT LOW-LIMIT T-STAT & HYDRONIC SYSTEM INTERLOCK

141-170	171-180	181-190	191-200	201-210
120V AC POWER-DISTRIBUTION TERMINAL BLOCKS	24V DC POWER-DISTRIBU-TION TERMINAL BLOCKS	STARTER WIRING & END SWITCHES	STARTER WIRING & END SWITCHES	SPARE

Figure 4-6e. Standard HVAC control panel terminal block assignments.

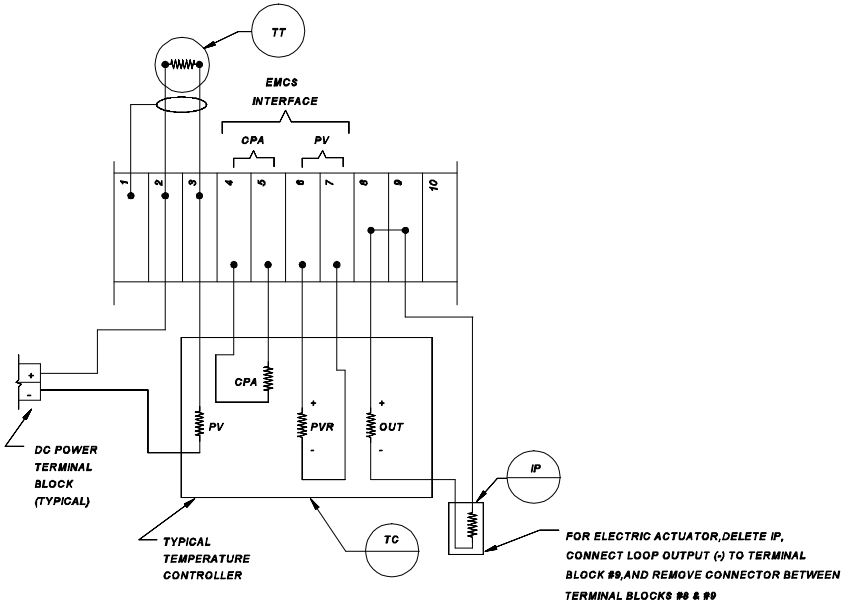

TYPICAL CONTROLLER WIRING
(TEMPERATURE CONTROLLER SHOWN)

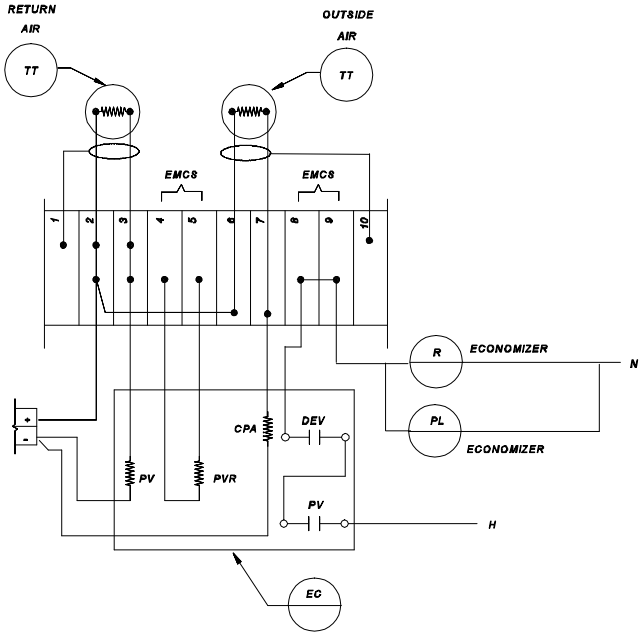

ECONOMIZER-CONTROLLER WIRING
(CONTACTS CONFIGURED AS PV AND DEV)

Figure 4-6f. Controller wiring.

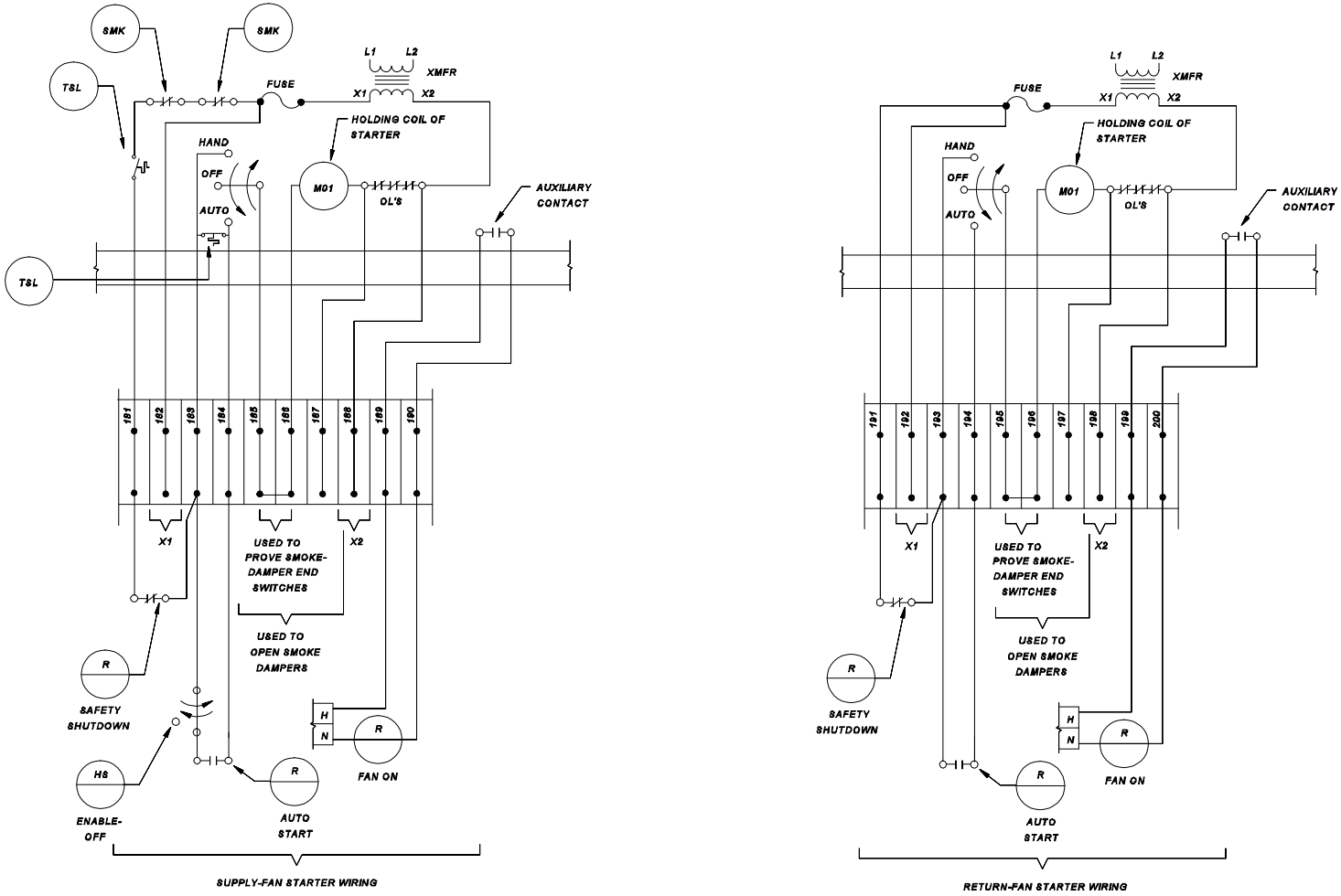

Figure 4-6g. Supply fan and return fan starter wiring.

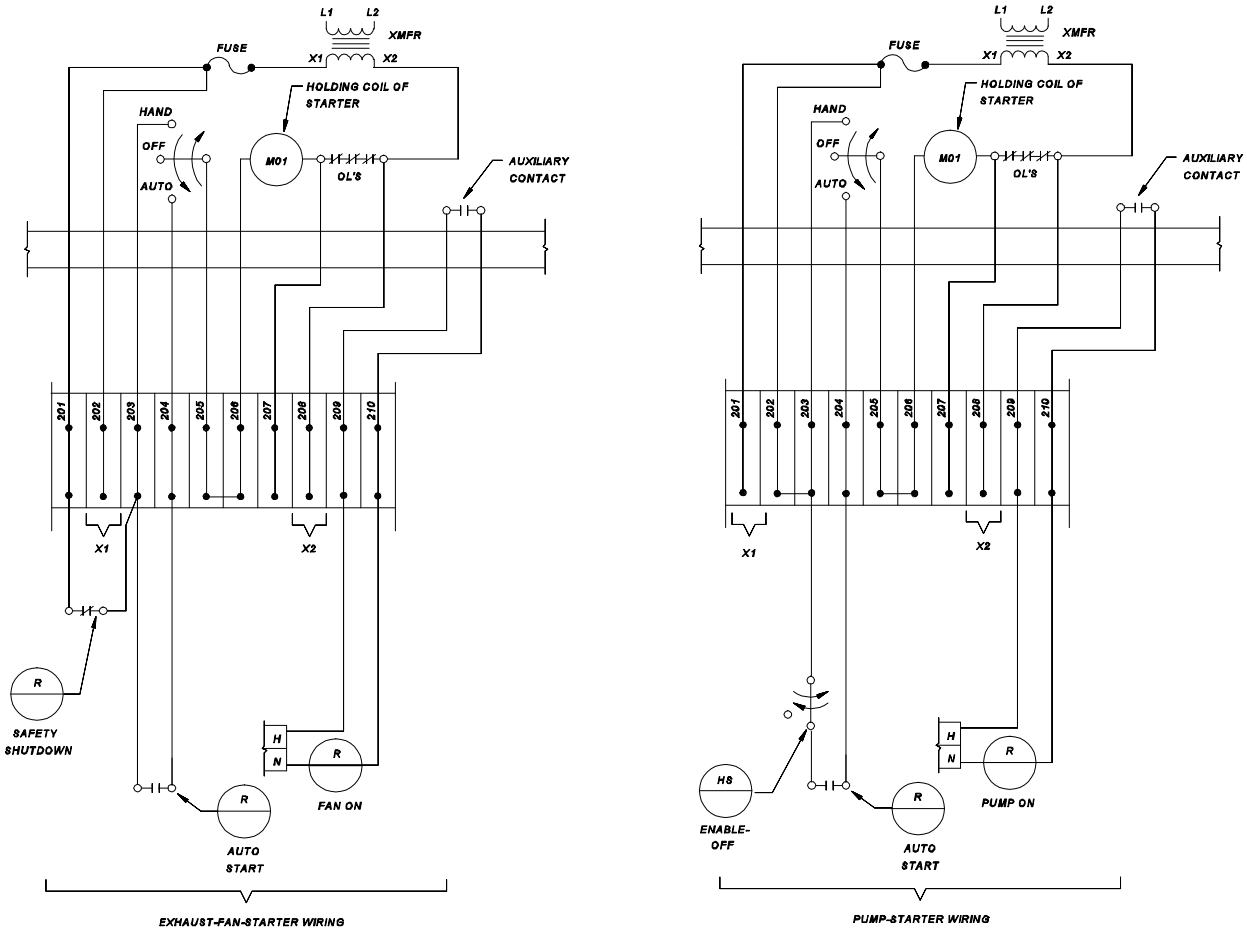

Figure 4-6h. Exhaust fan and pump starter wiring.

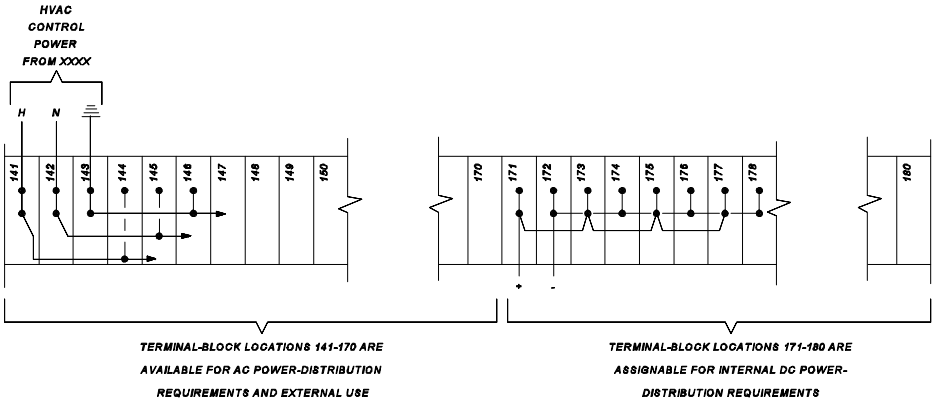

Figure 4-6i. HVAC control panel power wiring.