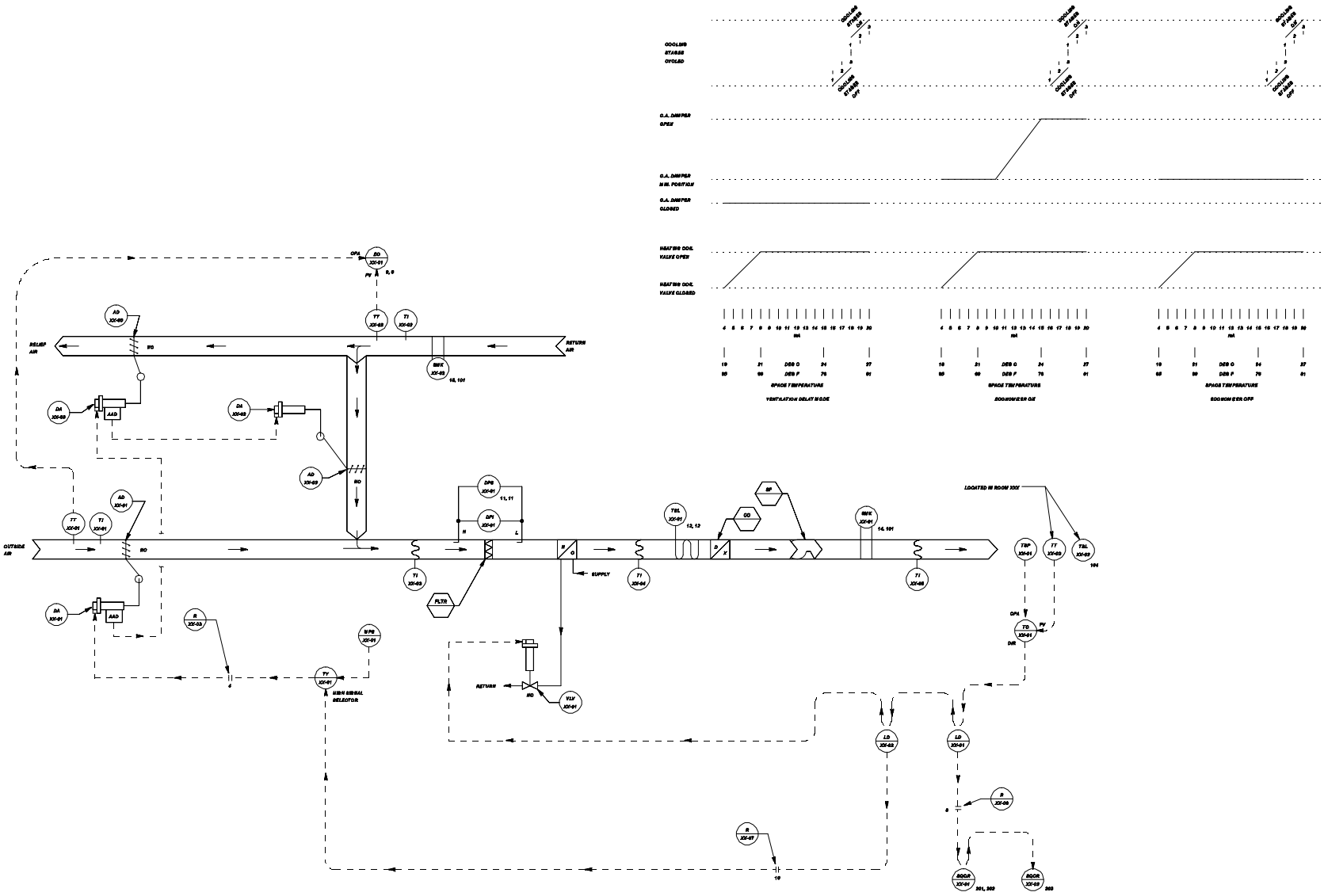

Figure 4-22a. Control system schematic for single zone HVAC system with DX coil.

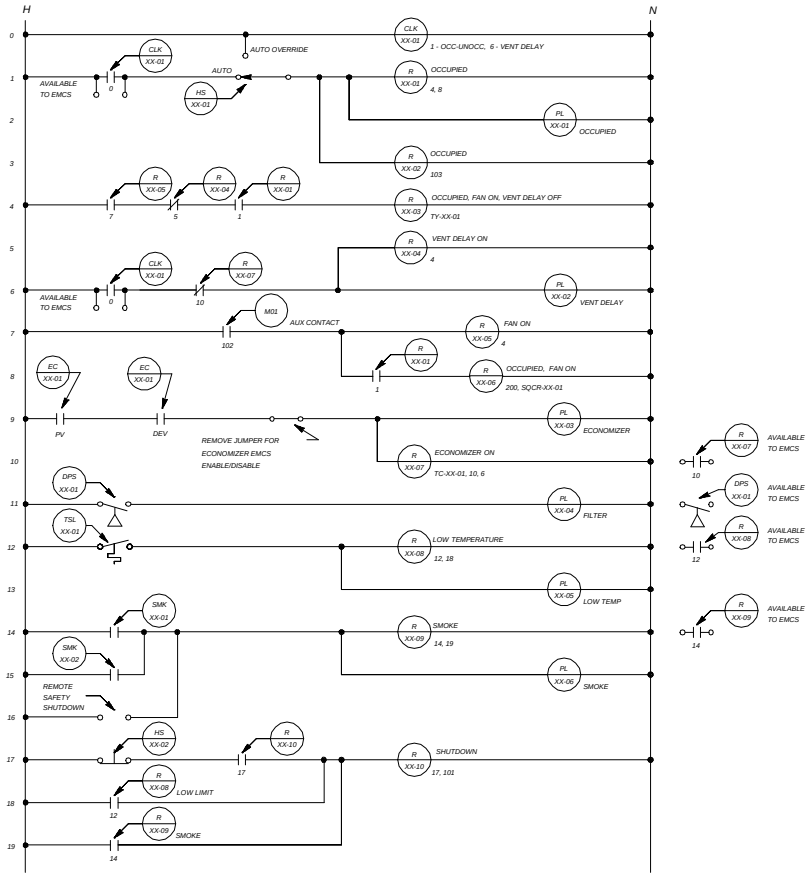

HVAC CONTROL PANEL

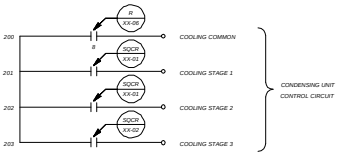

DX CONDENSING UNIT INTERLOCK

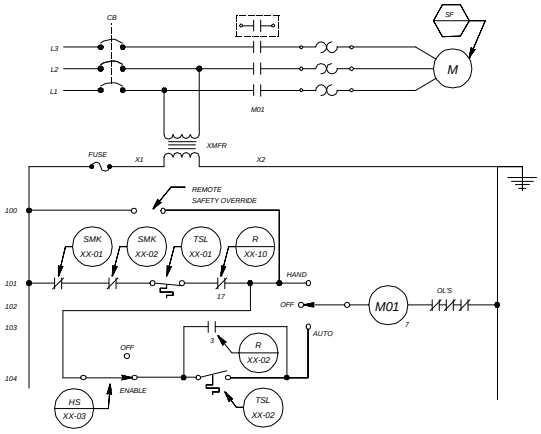

SUPPLY FAN STARTER

Figure 4-22b. Control system ladder diagram for single zone HVAC system with DX coil.

LOOP CONTROL FUNCTION	DEVICE NUMBER	DEVICE FUNCTION	SETPOINT	RANGE	ADDITIONAL PARAMETERS
SPACE TEMPERATURE	DA-XX-01 DA-XX-02 DA-XX-03	DAMPER ACTUATOR	———	10 - 15 mA	———
	MPS-XX-01	MINIMUM POSITION SWITCH	———	———	SET MIN OA L/s (CFM) EQUAL TO ___ L/S (___ CFM)
	TT-XX-01	OUTSIDE AIR TEMPERATURE TRANSMITTER	———	-34 TO +54 DEG C -30 TO +130 DEG F	———
	TT-XX-02	RETURN AIR TEMPERATURE TRANSMITTER	———	-34 TO +54 DEG C -30 TO +130 DEG F	———
	EC-XX-01	ECONOMIZER CONTROLLER	PV CONTACT CLOSE AT __ DEG C (__ DEG F) OPEN AT __ DEG C (__ DEG F)	-34 TO +54 DEG C -30 TO +130 DEG F	DEV CONTACT CLOSE @ DELTA T= __ DEG C (__ DEG F) OPEN @ DELTA T= __ DEG C (__ DEG F)
	TT-XX-03	SPACE TEMPERATURE TRANSMITTER	———	10 TO 30 DEG C 50 TO 85 DEG F	———
	TSP-XX-01	SPACE TEMPERATURE SETPOINT ADJUSTMENT	4 mA = 10 DEG C (50 DEG F) 20 mA = 30 DEG C (85 DEG F)	———	———
	TC-XX-01	SPACE TEMPERATURE CONTROLLER	4 mA = 10 DEG C (50 DEG F) 20 mA = 30 DEG C (85 DEG F)	10 TO 30 DEG C 50 TO 85 DEG F	SET LIMITS AVAILABLE TO OCCUPANT BY TSP-XX-01 AT 19 TO 22 DEG C (66 TO 72 DEG F)
	VLV-XX-01	HEATING COIL VALVE	———	4 - 8 mA	Kv = __ (Cv = __) CLOSE AGAINST __ kPa (__PSIG)
	SQCR-XX-01	CONDENSING UNIT SEQUENCER	———	STAGE 1: ON = 18 mA STAGE 2: ON = 19 mA	STAGE 1: OFF = 16 mA STAGE 2: OFF = 17 mA
	SQCR-XX-02	CONDENSING UNIT SEQUENCER	———	STAGE 3: ON = 20 mA	STAGE 3: OFF = 18 mA
MIXED AIR	TSL-XX-01	LOW TEMPERATURE PROTECTION THERMOSTAT	2 DEG C 35 DEG F	———	———
	DPS-XX-01	FILTER ALARM	PER FILTER MANUFACTURER'S RECOMMENDATION	PER FILTER MANUFACTURER'S RECOMMENDATION	———
SPACE LOW TEMPERATURE	TSL-XX-02	NIGHT STAT - SPACE LOW TEMPERATURE PROTECTION	13 DEG C 55 DEG F	3 DEG C DIFFERENTIAL 5 DEG F DIFFERENTIAL	———
OCCUPIED MODE	CLK-XX-01 CONTACT	365 DAY SCHEDULE	———	NORMAL SCHEDULE (M-F) CONTACT CLOSED: 0705 HRS CONTACT OPEN: 1700 HRS	CONTACT OPEN: SAT, SUN
VENTILATION DELAY MODE	CLK-XX-01 CONTACT	365 DAY SCHEDULE	———	NORMAL SCHEDULE (M-F) CONTACT CLOSED: 0700 HRS CONTACT OPEN: 0800 HRS	

NOTE: OTHER CONTROL DEVICES SUCH AS I/Ps, RELAYS, AND SIGNAL SELECTERS ARE NOT SHOWN.

Figure 4-22c. Control system equipment for single zone HVAC system with DX coil.

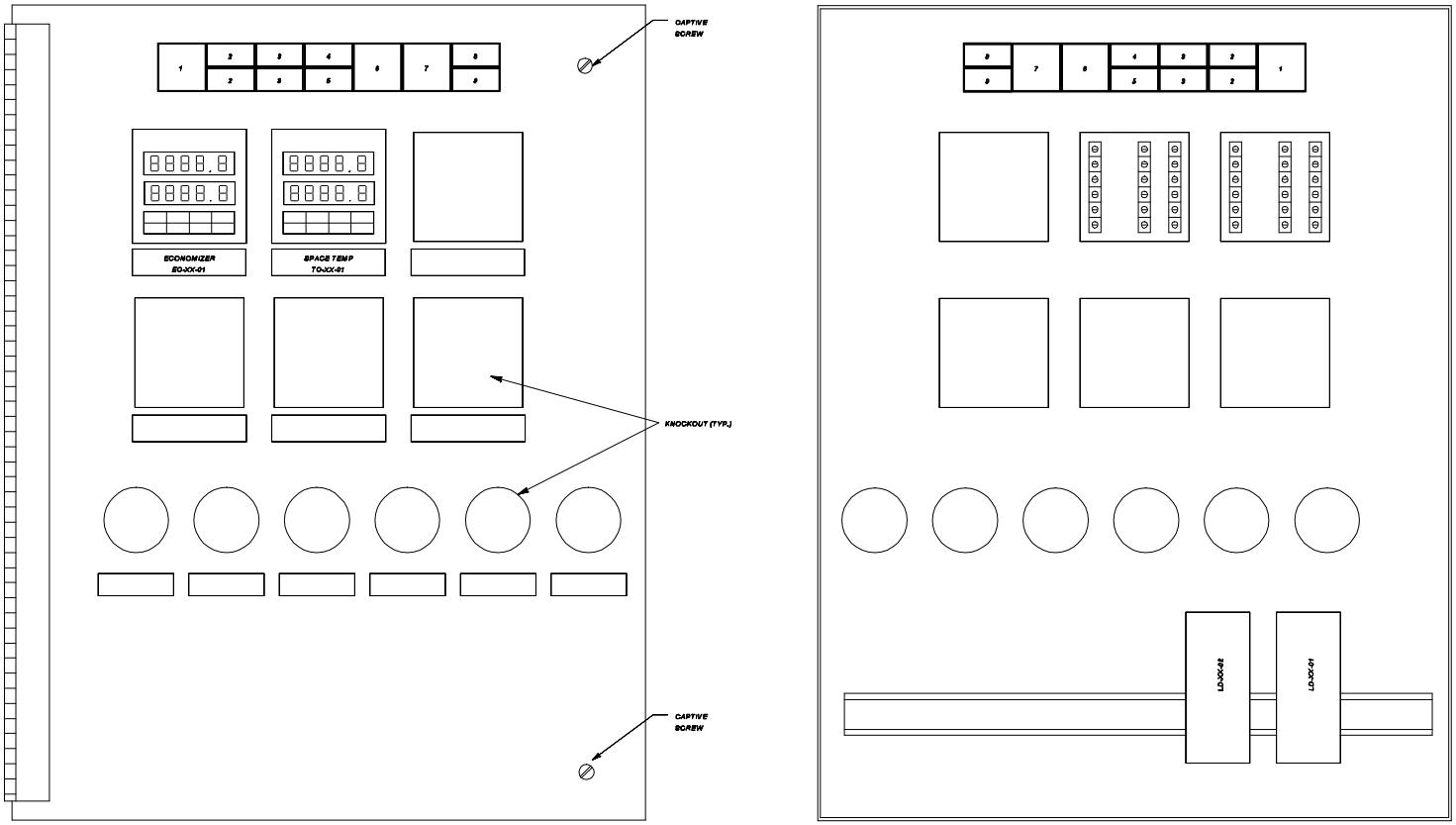

FRONT VIEW

REAR VIEW

SWITCH AND PILOT LIGHT LEGEND

POSITION LEGEND	DEVICE TYPE	IDENTIFIER	POSITION LEGEND	DEVICE TYPE	IDENTIFIER
1 - RESET	NON-ILLUMINATED MOMENTARY CONTACT PUSH BUTTON SWITCH	HS-XX-02	6 - FILTER	PILOT LIGHT	PL-XX-04
2 - AUTO/AUTO OVERRIDE	ILLUMINATED MAINTAINED CONTACT INTERLOCKED SWITCHES	HS-XX-01	7 - OCC	PILOT LIGHT	PL-XX-01
3 - ENABLE/OFF	ILLUMINATED MAINTAINED CONTACT INTERLOCKED SWITCHES	HS-XX-03	8 - VENT DELAY	PILOT LIGHT	PL-XX-02
4 - LOW TEMP	PILOT LIGHT	PL-XX-05	9 - ECON	PILOT LIGHT	PL-XX-03
5 - SMOKE	PILOT LIGHT	PL-XX-06			

Figure 4-22d. Control panel interior door layout for single zone HVAC system with DX coil.

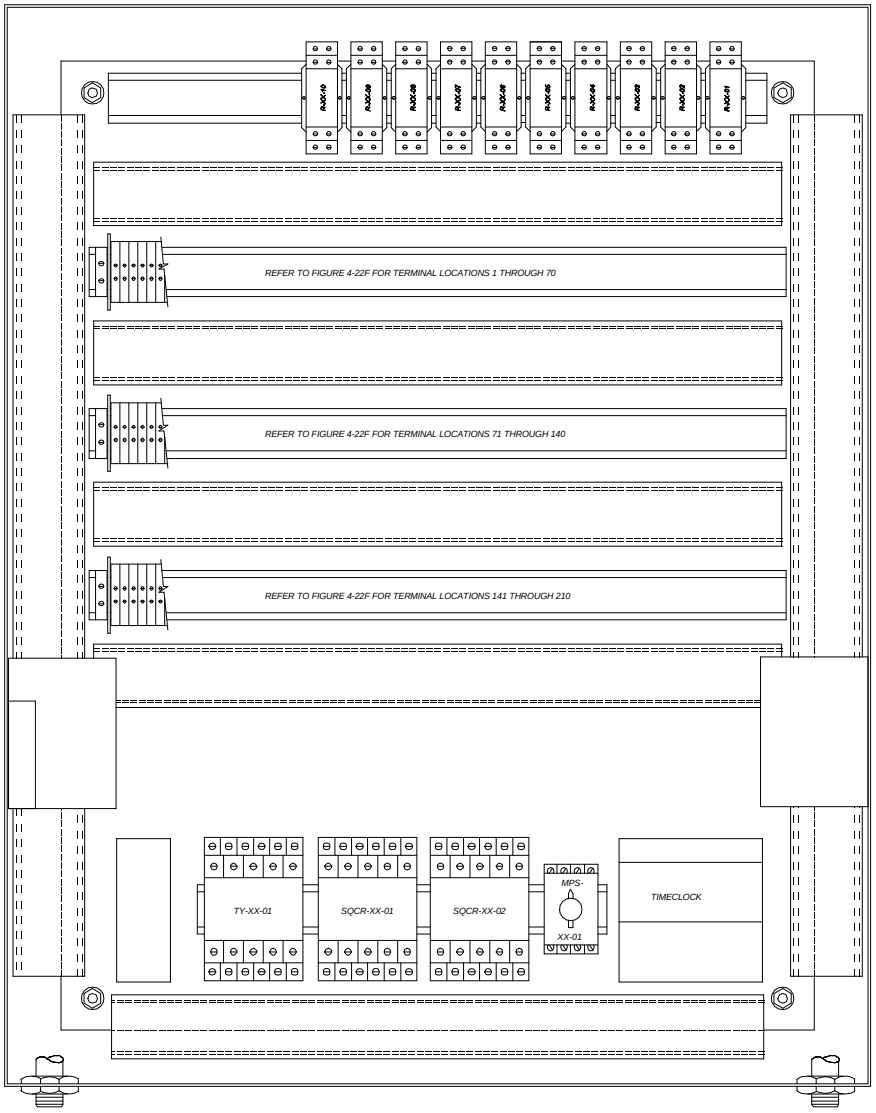

Figure 4-22e. Control panel back panel layout for single zone HVAC system with DX coil.

1-10	11-20	21-30	31-40	41-50	51-60	61-70
EC-XX-01 ECONOMIZER CONTROLLER TERMINAL BLOCKS	TC-XX-01 SPACE TEMP CONTROLLER TERMINAL BLOCKS	RESERVED FOR CONTROLLER	RESERVED FOR CONTROLLER	RESERVED FOR CONTROLLER	RESERVED FOR CONTROLLER	RESERVED FOR CONTROLLER

71-80	81-84	85-86	87-90	91-94	95-96	97-100	101-104	105-110	111-120	121-124	125-130	131-132	133-140
RESERVED FOR CONTROLLER	CLK-XX-01 EMCS REPLACE-MENT	SPACE	REMOTE START CONTACTS	TSL-XX-01 AND EMCS CONTACTS	SPACE	SMK-XX-01 SMK-XX-02 AND EMCS CONTACTS	DPS-XX-01 AND EMCS CONTACTS	SPACE	SPACE	EMCS ECONO-MIZER OVERRIDE	SPACE	TSL-XX-02	SPACE

141-170	171-180	181-190	191-200	201-210
120 V AC POWER DISTRIBUTION TERMINAL BLOCKS	24 V DC POWER DISTRIBUTION TERMINAL BLOCKS	SF-XX-01 STARTER CONTROL WIRING TERMINAL BLOCKS	SPACE	SPACE

Figure 4-22f. Control panel terminal block layout for single zone HVAC system with DX coil.

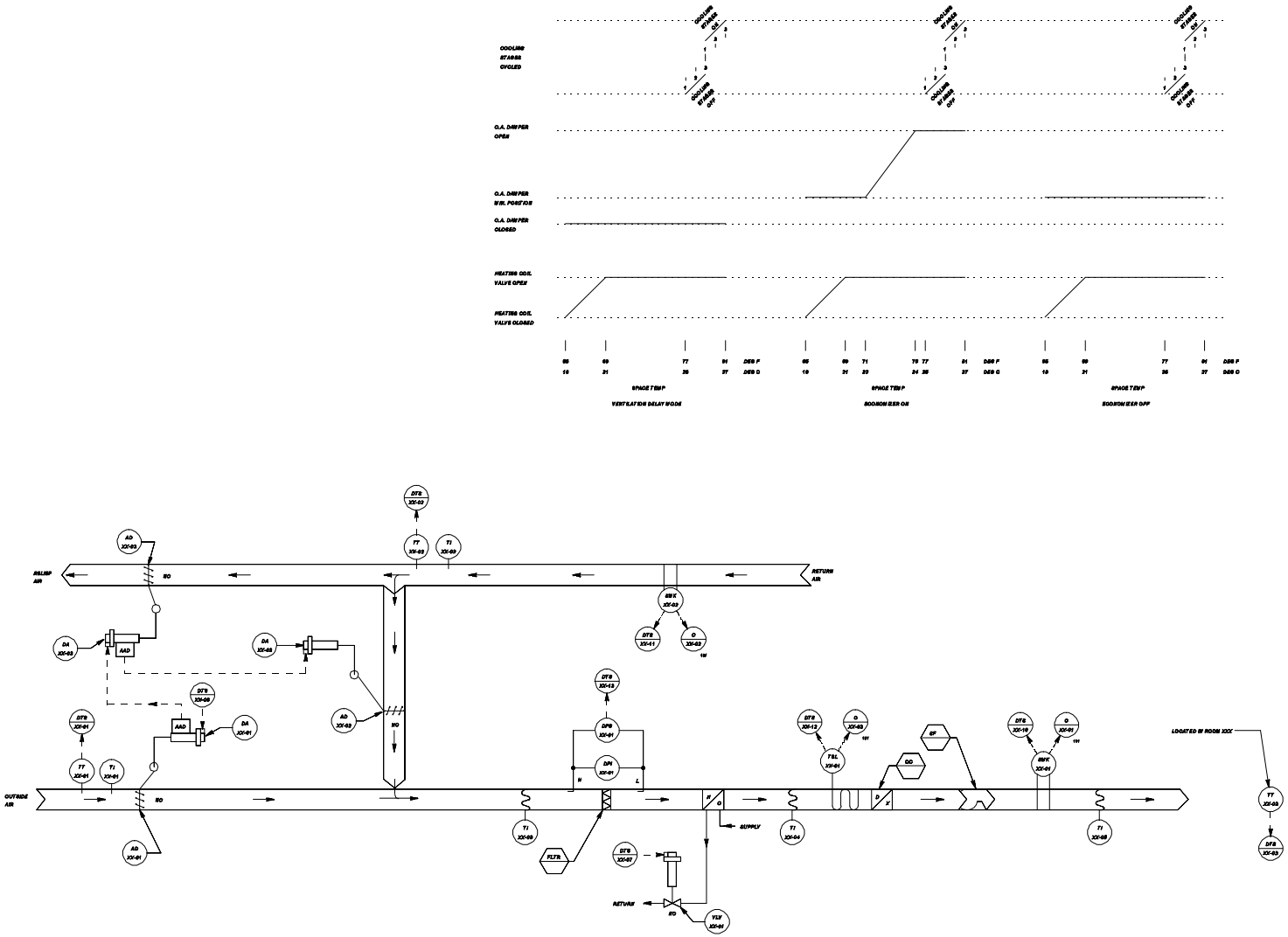

Figure 4-22g. DDC control system schematic for single zone HVAC system with DX coil.

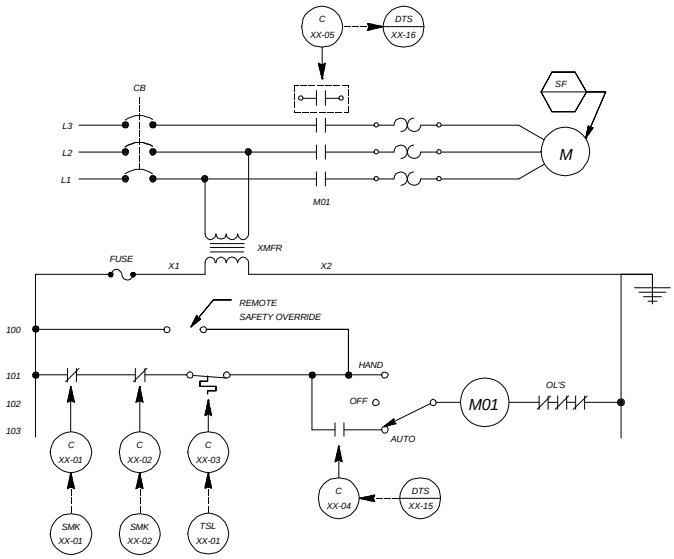

SUPPLY FAN STARTER

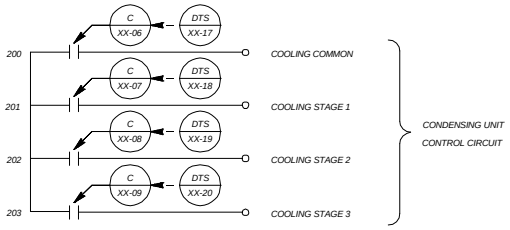

DX CONDENSING UNIT INTERLOCK

Figure 4-22h. DDC control system ladder diagram for single zone HVAC system with DX coil.

SENSOR SCHEDULE

IDENTIFIER	FUNCTION	RANGE
TT-XX-01	OUTSIDE AIR TEMPERATURE TRANSMITTER	-34 TO 54 DEG C (-30 TO +130 DEG F)
TT-XX-02	RETURN AIR TEMPERATURE TRANSMITTER	-34 TO 54 DEG C (-30 TO +130 DEG F)
TT-XX-03	SPACE TEMPERATURE TRANSMITTER	10 TO 30 DEG C (50 TO 85 DEG F)

CONTROL VALVE SCHEDULE

IDENTIFIER	FUNCTION	TYPE	RANGE	Kv (Cv)	CLOSE-OFF RATING	REMARKS
VLV-XX-01	HEATING COIL VALVE	2-WAY, MODULATING	4 - 20 mA	XX	XX kPa (XX PSIG)	

CONTROL DAMPER SCHEDULE

IDENTIFIER	FUNCTION	TYPE	SIZE	RANGE	REMARKS
AD-XX-01	OUTSIDE AIR	MODULATING	W x H (mm) (WW" X HH")	4 - 20 mA	PARALLEL BLADE
AD-XX-02	RETURN AIR	MODULATING	W x H (mm) (WW" X HH")	↓	PARALLEL BLADE
AD-XX-03	RELIEF AIR	MODULATING	W x H (mm) (WW" X HH")	↓	PARALLEL BLADE

OPERATING PARAMETERS

FUNCTION	SETPOINT	REMARKS
MINIMUM OUTSIDE AIR	XXXX L/s (XXXX CFM)	
SPACE TEMPERATURE	XX DEG C (XX DEG F) XX DEG C (XX DEG F)	(HEATING) NIGHT SETBACK (HEATING ONLY)
CONDENSING UNIT STAGING		STAGE 1: ON @ XX DEG C (XX DEG F), OFF @ XX DEG C (XX DEG F) STAGE 2: ON @ XX DEG C (XX DEG F), OFF @ XX DEG C (XX DEG F) STAGE 3: ON @ XX DEG C (XX DEG F), OFF @ XX DEG C (XX DEG F)
ECONOMIZER MODE		ECONOMIZER MODE = ON, WHEN CONDITION 1 AND CONDITION 2 ARE BOTH SATISFIED. CONDITION 1: RETURN AIR TEMP. > XX DEG C (XX DEG F) CONDITION 2: RETURN AIR TEMP. MINUS OUTSIDE AIR TEMP. > XX DEG C (XX DEG F)
OCCUPIED MODE		MONDAY - FRIDAY : 0705 HRS - 1700 HRS
VENT DELAY MODE		MONDAY - FRIDAY : 0700 HRS - 0800 HRS
FREEZESTAT	XX DEG C (XX DEG F)	
FILTER ALARM	XX kPa (XX IN. WATER)	

Figure 4-22i. DDC control system equipment for single zone HVAC system with DX coil.

	HARDWARE																							SOFTWARE																	
	OUTPUT													INPUT										ALARMS								APPLICATION PROGRAMS									
	DIGITAL						ANALOG							DIGITAL						ANALOG				DIGITAL				ANALOG													
	CONTROL RELAY						POSITION ADJUSTMENT							AUXILIARY CONTACT						TEMPERATURE	% RELATIVE HUMIDITY	PSIG, PSIA, PSID	FLOW		CONTACT CLOSURE				HIGH LIMIT	LOW LIMIT	RUN TIME		SCHEDULED START/STOP	OPTIMUM START/STOP	DUTY CYCLING	DEMAND LIMITING	DAY/NIGHT SETBACK	ECONOMIZER	VENTILATION/RECIRCULATION						FAILURE MODE **
SUPPLY FAN	1													1											X						X		X	X	X	X								
OUTSIDE AIR																				1										X														
RETURN AIR																				1									X	X														
SPACE																				1									X	X							X	X							
MIXED AIR DAMPERS							1																															X	X					
HEATING COIL VALVE							1																																					
CONDENSING UNIT	4																													X				X	X									
SMOKE DETECTOR														2											X																			
FREEZESTAT														1											X																			
FILTER														1											X																			

** C - LAST COMMAND
H - HIGH VALUE
L - LOW VALUE

O - ON (OPEN)
F - OFF (CLOSED)

DDC DATA TERMINAL STRIP LAYOUT

		DEVICE NO.	DESCRIPTION	TYPE
1		TT-XX-01	OUTSIDE AIR TEMPERATURE	AI
2		TT-XX-02	RETURN AIR TEMPERATURE	AI
3		TT-XX-03	SPACE TEMPERATURE	AI
4				
5				
6		DA-XX-01	MIXED AIR DAMPERS	AO
7		VLV-XX-01	HEATING COIL VALVE	AO
8				
9				
10		SMK-XX-01	SUPPLY AIR SMOKE DETECTOR	DI
11		SMK-XX-02	RETURN AIR SMOKE DETECTOR	DI
12		TSL-XX-01	FREEZESTAT	DI
13		DPS-XX-01	FILTER ALARM	DI
14				
15		C-XX-04	SUPPLY FAN START/STOP	DO
16		C-XX-05	SUPPLY FAN STATUS	DI
17		C-XX-06	CONDENSING UNIT - COMMON	DO
18		C-XX-07	CONDENSING UNIT - STAGE 1	DO
19		C-XX-08	CONDENSING UNIT - STAGE 2	DO
20		C-XX-09	CONDENSING UNIT - STAGE 3	DO

Figure 4-22j. DDC control system I/O table and data terminal strip layout for single zone HVAC system with DX coil.