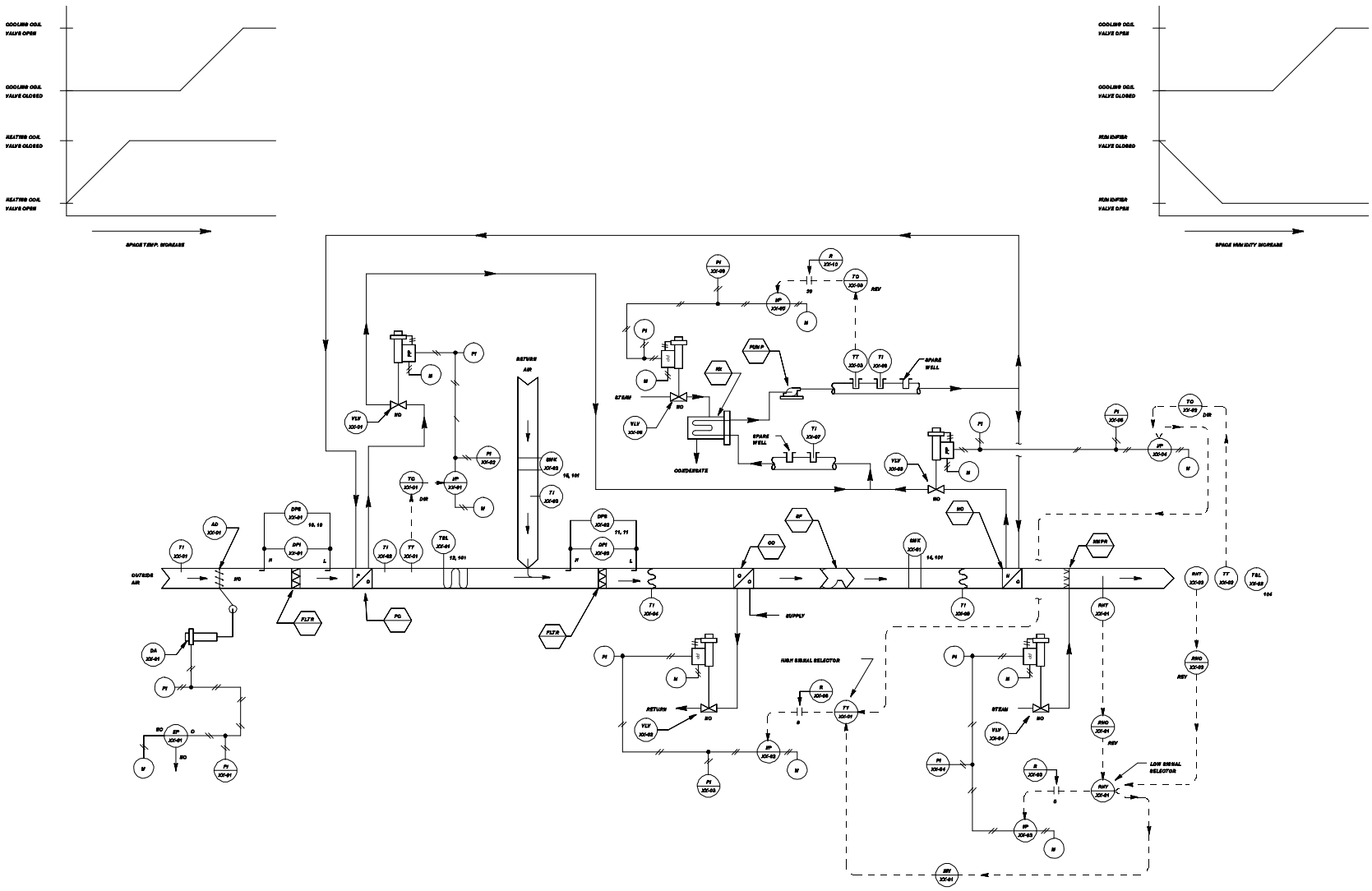

Figure 4-21a. Control system schematic for single zone HVAC system with humidity control.

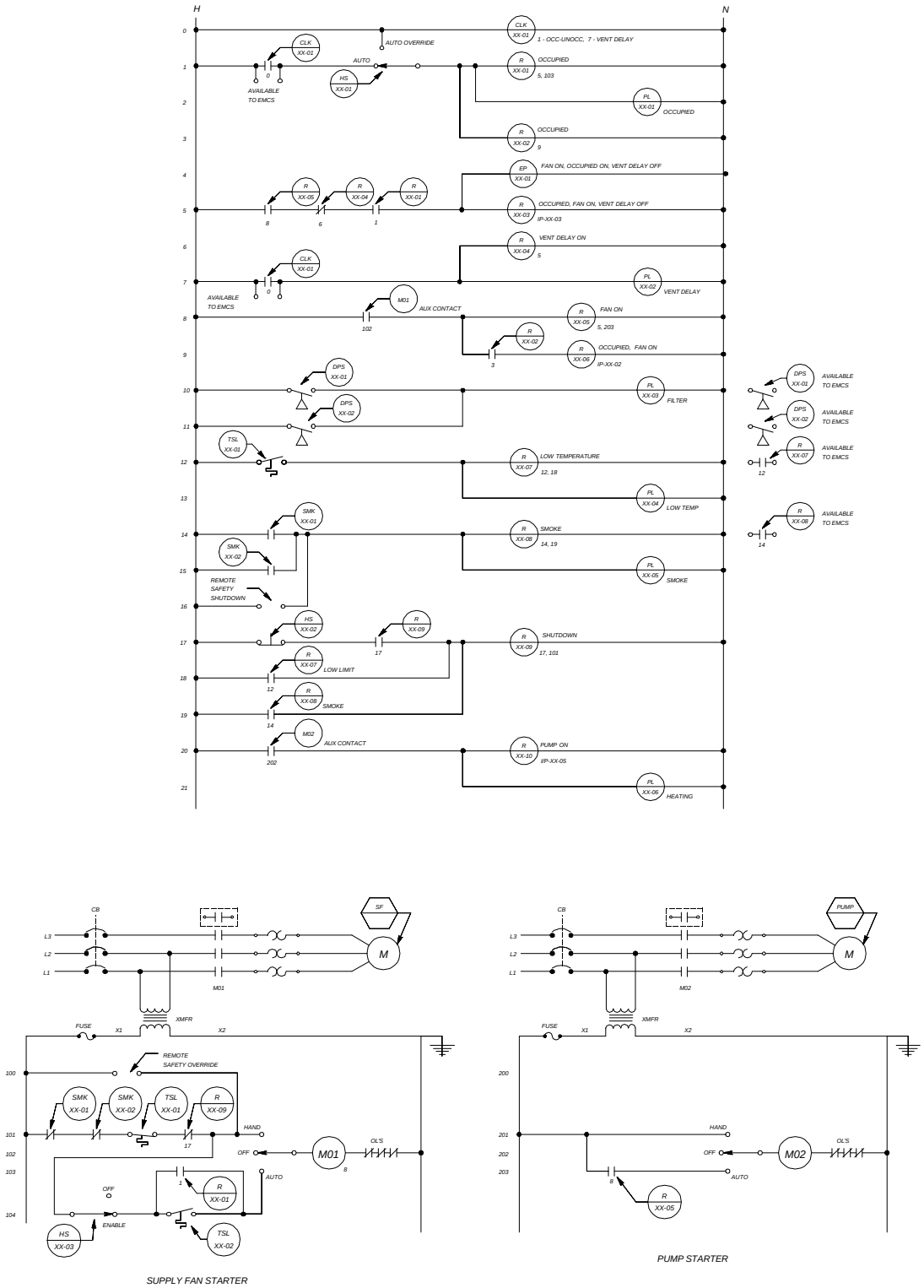

Figure 4-21b. Control system ladder diagram for single zone HVAC system with humidity control.

LOOP CONTROL FUNCTION	DEVICE NUMBER	DEVICE FUNCTION	SETPOINT	RANGE	ADDITIONAL PARAMETERS
OUTSIDE AIR	DA-XX-01	DAMPER ACTUATOR	———	SPRING RANGE	(TWO-POSITION)
PRE-HEAT COIL TEMPERATURE	VLV-XX-01	PRE-HEAT COIL VALVE	———	21 - 103 kPa (3 - 15 PSIG)	Kv=__ (Cv=__) CLOSE AGAINST __ kPa (__ PSIG)
	TT-XX-01	PRE-HEAT TEMPERATURE TRANSMITTER	———	4 TO 60 DEG C (40 TO 140 DEG F)	———
	TC-XX-01	PRE-HEAT TEMPERATURE CONTROLLER	———	4 TO 60 DEG C (40 TO 140 DEG F)	———
	DPS-XX-01	PRE-FILTER ALARM	PER FILTER MANUFACTURER'S RECOMMENDATION	PER FILTER MANUFACTURER'S RECOMMENDATION	———
MIXED AIR	TSL-XX-01	LOW TEMPERATURE PROTECTION THERMOSTAT	2 DEG C (35 DEG F)	———	———
	DPS-XX-02	FILTER ALARM	PER FILTER MANUFACTURER'S RECOMMENDATION	PER FILTER MANUFACTURER'S RECOMMENDATION	———
SPACE LOW TEMPERATURE	TSL-XX-02	NIGHT STAT - SPACE LOW TEMPERATURE PROTECTION	13 DEG C (55 DEG F)	DIFFERENTIAL = 3 DEG C (5 DEG F)	———
SPACE TEMPERATURE	TT-XX-02	SPACE TEMPERATURE TRANSMITTER	———	10 TO 30 DEG C (50 TO 85 DEG F)	———
	TC-XX-02	SPACE TEMPERATURE CONTROLLER	24 DEG C (75 DEG F)	10 TO 30 DEG C (50 TO 85 DEG F)	———
	VLV-XX-02	COOLING COIL VALVE	———	69 - 103 kPa (10 - 15 PSIG)	Kv=__ (Cv=__) CLOSE AGAINST __ kPa (__ PSIG)
	VLV-XX-03	REHEAT COIL VALVE	———	21 - 55 kPa (3 - 8 PSIG)	Kv=__ (Cv=__) CLOSE AGAINST __ kPa (__ PSIG)
RELATIVE HUMIDITY	RHT-XX-01 RHT-XX-02	RELATIVE HUMIDITY TRANSMITTER	———	0 TO 100 % RH	———
	RHC-XX-01	SUPPLY DUCT REL. HUM. HI-LIMIT CONTROLLER	SETPOINT = 90 % RH PROPORTIONAL BAND = 10 % MANUAL RESET = 50 %	0 TO 100 % RH	———
	RHC-XX-02	SPACE RELATIVE HUMIDITY CONTROLLER	50 % RH	0 TO 100 % RH	———
	VLV-XX-04	HUMIDIFIER VALVE	———	69 - 103 kPa (10 - 15 PSIG)	Kv=__ (Cv=__) CLOSE AGAINST __ kPa (__ PSIG)
HYDRONIC HEATING	TT-XX-03	HW SUPPLY TEMPERATURE TRANSMITTER	———	38 TO 121 DEG C (100 TO 250 DEG F)	———
	TC-XX-03	HW SUPPLY TEMPERATURE CONTROLLER	93 DEG C (200 DEG F)	38 TO 121 DEG C (100 TO 250 DEG F)	———
	VLV-XX-05	CONVERTER VALVE	———	21 - 103 kPa (3 - 15 PSIG)	Kv=__ (Cv=__) CLOSE AGAINST __ kPa (__ PSIG)
OCCUPIED MODE	CLK-XX-01 CONTACT	365 DAY SCHEDULE	———	NORMAL SCHEDULE (M-F) CONTACT CLOSED: 0705 HRS CONTACT OPEN: 1700 HRS	CONTACT OPEN: SAT, SUN
VENTILATION DELAY MODE	CLK-XX-01 CONTACT	365 DAY SCHEDULE	———	NORMAL SCHEDULE (M-F) CONTACT CLOSED: 0700 HRS CONTACT OPEN: 0800 HRS	

NOTE: OTHER CONTROL DEVICES SUCH AS I/Ps, RELAYS, AND SIGNAL SELECTERS ARE NOT SHOWN.

Figure 4-21c. Control system equipment for single zone HVAC system with humidity control.

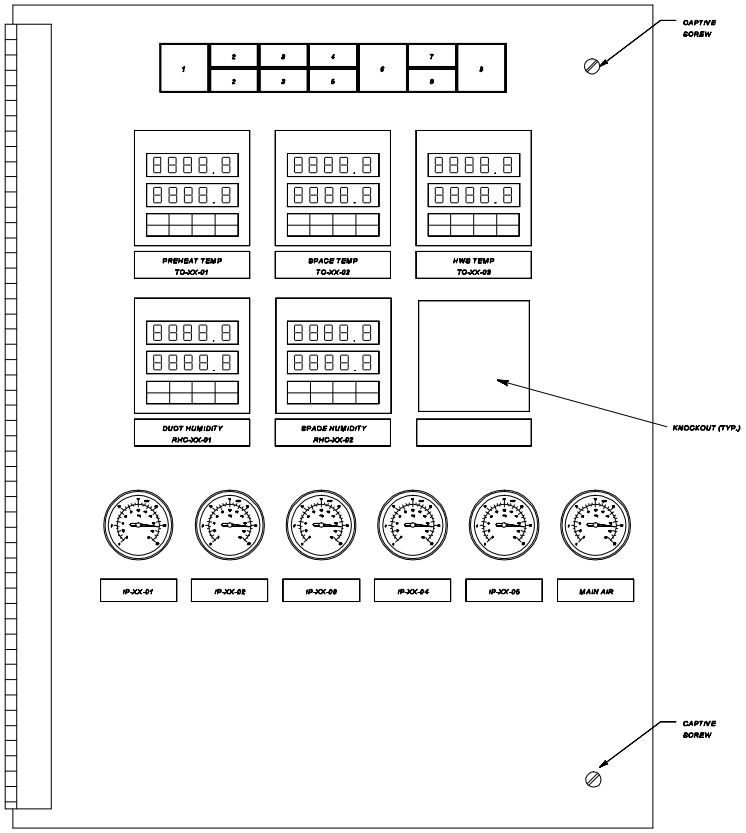

FRONT VIEW

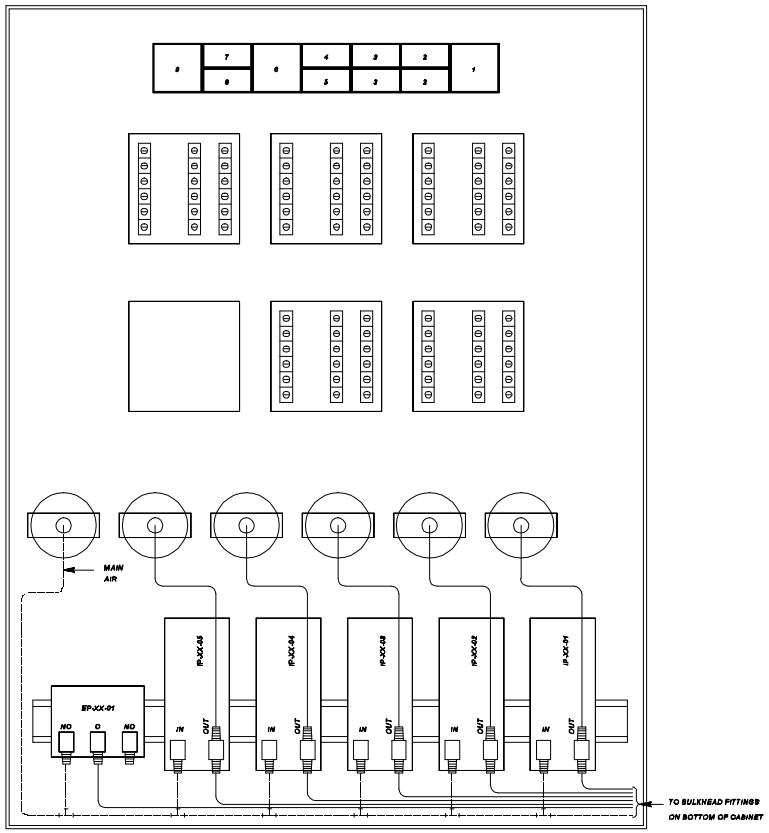

REAR VIEW

SWITCH AND PILOT LIGHT LEGEND

POSITION LEGEND	DEVICE TYPE	IDENTIFIER	POSITION LEGEND	DEVICE TYPE	IDENTIFIER
1 - RESET	NON-ILLUMINATED MOMENTARY CONTACT PUSH BUTTON SWITCH	HS-XX-02	6 - FILTER	PILOT LIGHT	PL-XX-03
2 - AUTO/AUTO OVERRIDE	ILLUMINATED MAINTAINED CONTACT INTERLOCKED SWITCHES	HS-XX-01	7 - DCC	PILOT LIGHT	PL-XX-01
3 - ENABLE/OFF	ILLUMINATED MAINTAINED CONTACT INTERLOCKED SWITCHES	HS-XX-03	8 - VENT DELAY	PILOT LIGHT	PL-XX-02
4 - LOW TEMP	PILOT LIGHT	PL-XX-04	9 - HEATING	PILOT LIGHT	PL-XX-06
5 - SMOKE	PILOT LIGHT	PL-XX-05			

Figure 4-21d. Control panel interior door layout for single zone HVAC system with humidity control.

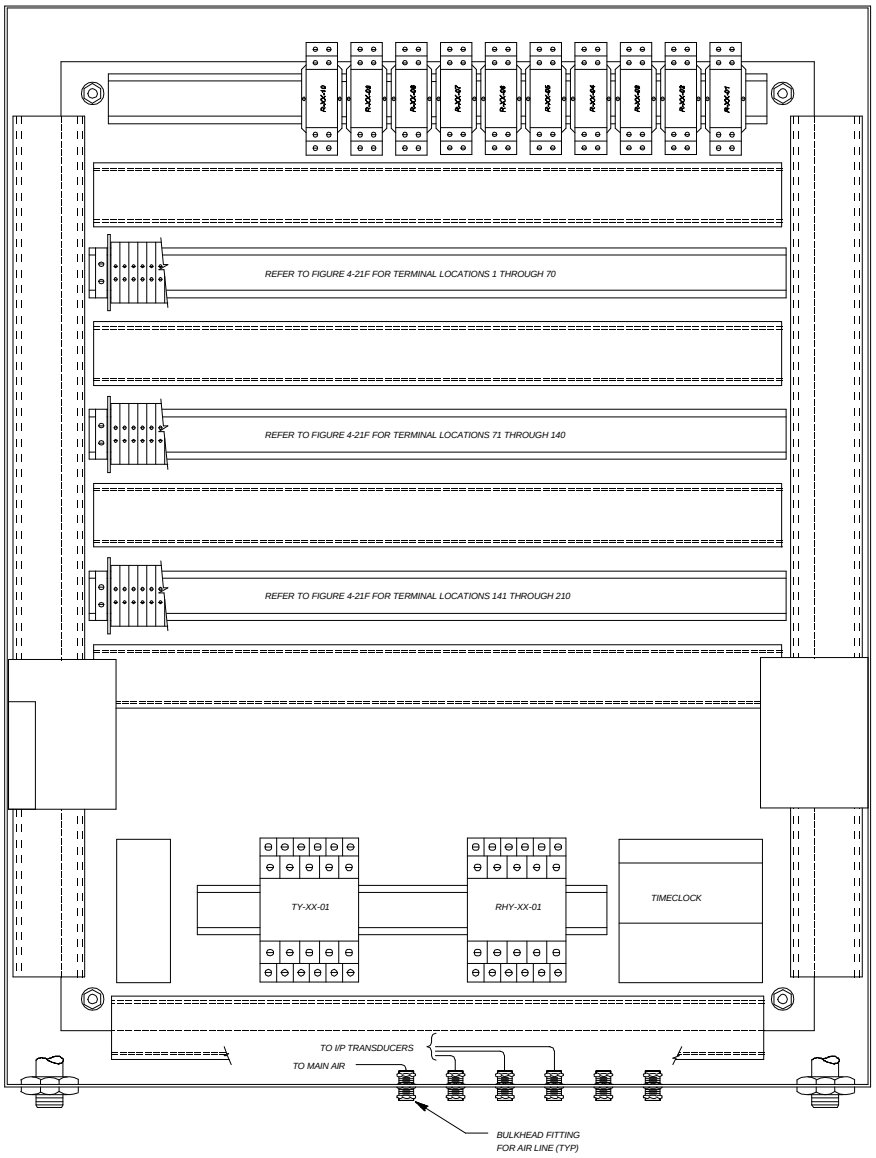

Figure 4-21e. Control panel back panel layout for single zone HVAC system with humidity control.

1-10	11-20	21-30	31-40	41-50	51-60	61-70
TC-XX-01 PREHEAT COIL TEMP CONTROLLER TERMINAL BLOCKS	TC-XX-02 SPACE TEMP CONTROLLER TERMINAL BLOCKS	TC-XX-03 HEATING WATER - SUPPLY TEMP CONTROLLER TERMINAL BLOCKS	RHC-XX-01 DUCT - HIGH LIMIT HUMIDITY CONTROLLER TERMINAL BLOCKS	RHC-XX-02 SPACE RELATIVE HUMIDITY CONTROLLER TERMINAL BLOCKS	RESERVED FOR CONTROLLER	RESERVED FOR CONTROLLER

71-80	81-84	85-86	87-90	91-94	95-96	97-100	101-104	105-108	109-110	111-120	121-130	131-132	133-140
RESERVED FOR CONTROLLER	CLK-XX-01 EMCS REPLACE-MENT	SPACE	REMOTE START CONTACTS	TSL-XX-01 AND EMCS CONTACTS	SPACE	SMK-XX-01 SMK-XX-02 AND EMCS CONTACTS	DPS-XX-01 AND EMCS CONTACTS	DPS-XX-02 AND EMCS CONTACTS	SPACE	SPACE	SPACE	TSL-XX-02	SPACE

141-170	171-180	181-190	191-200	201-210
120 V AC POWER DISTRIBUTION TERMINAL BLOCKS	24 V DC POWER DISTRIBUTION TERMINAL BLOCKS	SF-XX-01 STARTER CONTROL WIRING TERMINAL BLOCKS	PUMP-XX-01 STARTER CONTROL WIRING TERMINAL BLOCKS	SPACE

Figure 4-21f. Control panel terminal block layout for single zone HVAC system with humidity control.

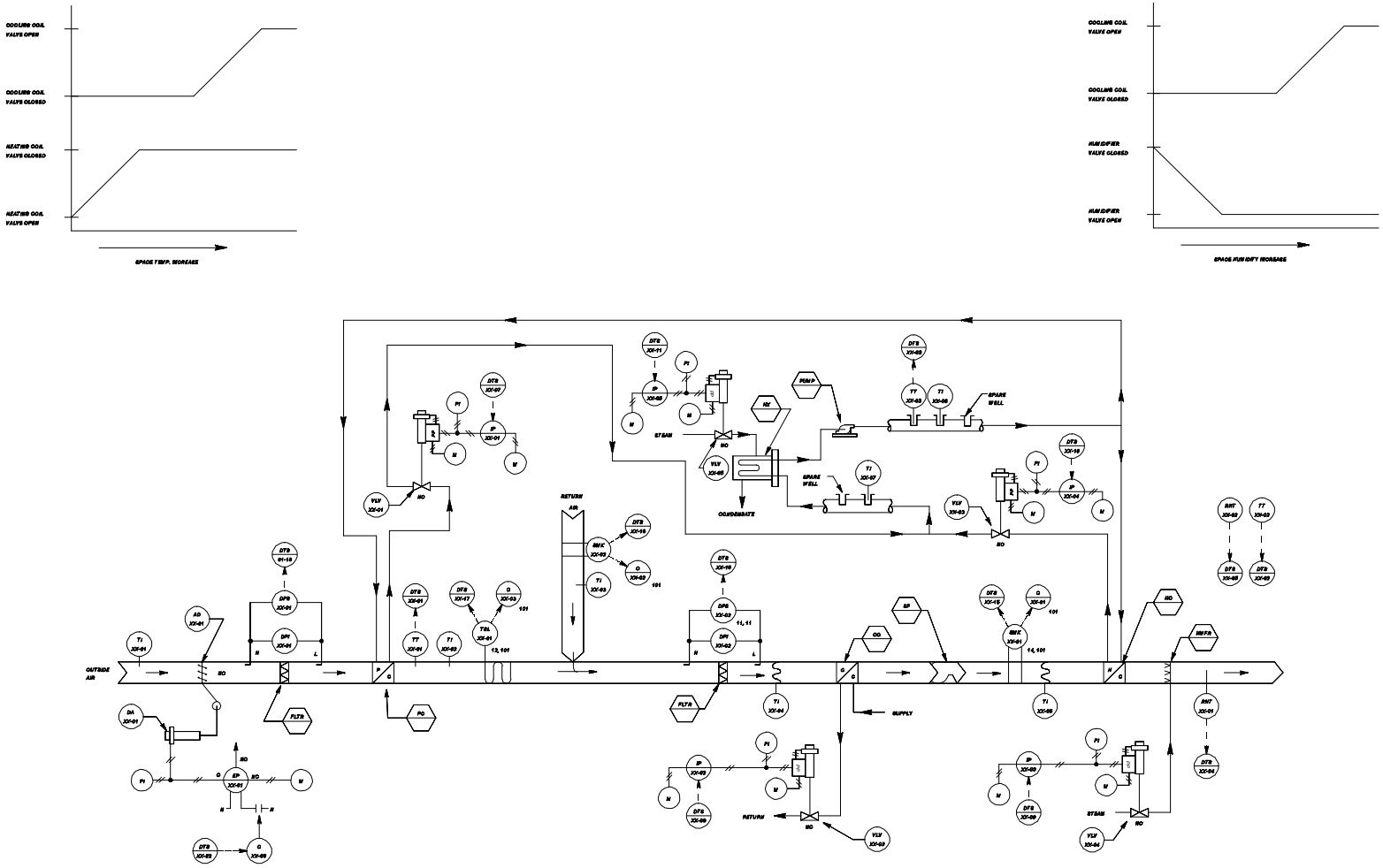

Figure 4-21g. DDC control system schematic for single zone HVAC system with humidity control.

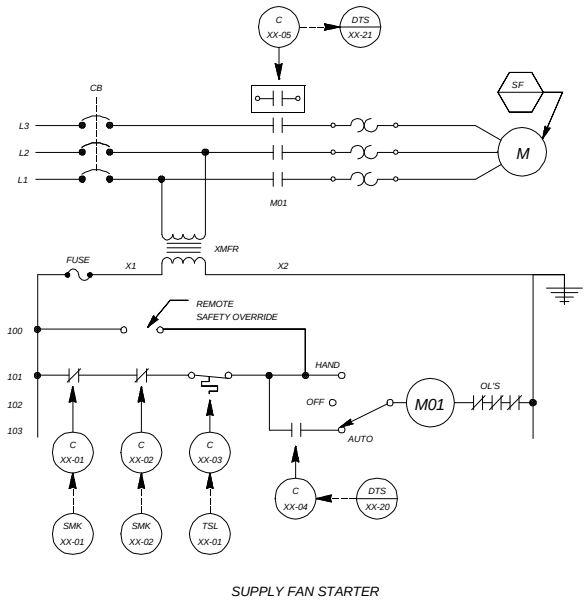

Figure 4-21h. DDC control system ladder diagram for single zone HVAC system with humidity control.

SENSOR SCHEDULE

IDENTIFIER	FUNCTION	RANGE
TT-XX-01	OUTSIDE AIR TEMPERATURE TRANSMITTER	-34 TO 54 DEG C (-30 TO +130 DEG F)
TT-XX-02	SPACE TEMPERATURE TRANSMITTER	10 TO 30 DEG C (50 TO 85 DEG F)
TT-XX-03	HEATING SUPPLY WATER TEMPERATURE TRANSMITTER	38 TO 121 DEG C (100 TO 250 DEG F)
RHT-XX-01	SUPPLY AIR RELATIVE HUMIDITY TRANSMITTER	0 TO 100% R.H.
RHT-XX-02	SPACE RELATIVE HUMIDITY TRANSMITTER	0 TO 100% R.H.

CONTROL VALVE SCHEDULE

IDENTIFIER	FUNCTION	TYPE	RANGE	Kv (Cv)	CLOSE-OFF RATING	REMARKS
VLV-XX-01	PREHEAT COIL VALVE	2-WAY, MODULATING	21 - 103 kPa (3-15 PSIG)	XX	XX kPa (XX PSIG)	
VLV-XX-02	COOLING COIL VALVE	2-WAY, MODULATING	21 - 103 kPa (3-15 PSIG)	XX	XX kPa (XX PSIG)	
VLV-XX-03	HEATING COIL VALVE	2-WAY, MODULATING	21 - 103 kPa (3-15 PSIG)	XX	XX kPa (XX PSIG)	
VLV-XX-04	HUMIDIFIER VALVE	2-WAY, MODULATING	21 - 103 kPa (3-15 PSIG)	XX	XX kPa (XX PSIG)	
VLV-XX-05	CONVERTER VALVE	2-WAY, MODULATING	21 - 103 kPa (3-15 PSIG)	XX	XX kPa (XX PSIG)	

CONTROL DAMPER SCHEDULE

IDENTIFIER	FUNCTION	TYPE	SIZE	RANGE	REMARKS
AD-XX-01	OUTSIDE AIR	TWO-POSITION	W x H (mm) (WW" X HH")		PARALLEL BLADE

OPERATING PARAMETERS

FUNCTION	SETPOINT	REMARKS
PREHEAT COIL DISCHARGE	XX DEG C (XX DEG F)	
SPACE TEMPERATURE	XX DEG C (XX DEG F) XX DEG C (XX DEG F)	(HEATING) (COOLING)
SPACE TEMP. (NIGHT SETBACK)	XX DEG C (XX DEG F)	(HEATING ONLY)
FREEZESTAT	XX DEG C (XX DEG F)	
SUPPLY AIR HUMIDITY HIGH LIMIT	XX% R.H.	
SPACE HUMIDITY	XX% R.H.	
HYDRONIC HEATING SUPPLY	XX DEG C (XX DEG F)	
OCCUPIED MODE		MONDAY - FRIDAY : 0705 HRS - 1700 HRS
VENT DELAY MODE		MONDAY - FRIDAY : 0700 HRS - 0800 HRS
FILTER ALARM	XX kPa (XX IN. WATER)	

Figure 4-21i. DDC control system equipment for single zone HVAC system with humidity control.

	HARDWARE																							SOFTWARE																
	OUTPUT												INPUT											ALARMS								APPLICATION PROGRAMS									
	DIGITAL					ANALOG						DIGITAL					ANALOG							DIGITAL				ANALOG														
	CONTROL RELAY					POSITION ADJUSTMENT						AUXILIARY CONTACT					TEMPERATURE	% RELATIVE HUMIDITY	PSIG, PSIA, PSID	FLOW				CONTACT CLOSURE				HIGH LIMIT	LOW LIMIT	RUN TIME		SCHEDULED START/STOP	OPTIMUM START/STOP	DUTY CYCLING	DEMAND LIMITING	DAY/NIGHT SETBACK	ECONOMIZER	VENTILATION/RECIRCULATION						FAILURE MODE **
SUPPLY FAN	1											1												X						X		X	X	X	X								
OUTSIDE AIR DAMPER	1																																				X						
PREHEAT COIL DISCHARGE																	1											X	X														
SPACE																	1	1										X	X						X								
SUPPLY AIR																		1										X	X														
HEATING WATER SUPPLY																	1											X	X														
PREHEAT COIL						1																																					
COOLING COIL						1																																					
HUMIDIFIER						1																																					
HEATING COIL						1																																					
CONVERTER						1																																					
SMOKE DETECTOR												2												X																			
FREEZESTAT												1												X																			
FILTER												1												X																			

** C - LAST COMMAND O - ON (OPEN)
H - HIGH VALUE F - OFF (CLOSED)
L - LOW VALUE

DDC DATA TERMINAL STRIP LAYOUT

	DEVICE NO.	DESCRIPTION	TYPE
1	TT-XX-01	PREHEAT DISCHARGE AIR	AI
2	TT-XX-02	SPACE TEMPERATURE	AI
3	TT-XX-03	HEATING SUPPLY WATER	AI
4	RHT-XX-01	SUPPLY AIR RELATIVE HUMIDITY	AI
5	RHT-XX-02	SPACE RELATIVE HUMIDITY	AI
6			
7	IP-XX-01	PREHEAT COIL VALVE	AO
8	IP-XX-02	COOLING COIL VALVE	AO
9	IP-XX-03	HUMIDIFIER VALVE	AO
10	IP-XX-04	HEATING COIL VALVE	AO
11	IP-XX-05	CONVERTER VALVE	AO
12			
13			
14			
15	SMK-XX-01	SUPPLY AIR SMOKE DETECTOR	DI
16	SMK-XX-02	RETURN AIR SMOKE DETECTOR	DI
17	TSL-XX-01	FREEZESTAT	DI
18	DPS-XX-01	PRE-FILTER	DI
19	DPS-XX-02	FILTER	DI
20	C-XX-04	SUPPLY-FAN START/STOP	DO
21	C-XX-05	SUPPLY FAN STATUS	DI
22	EP-XX-01	OUTSIDE-AIR DAMPER	DO
23			
24			
25			

Figure 4-21j. DDC control system I/O table and data terminal strip layout for single zone HVAC system with humidity control.