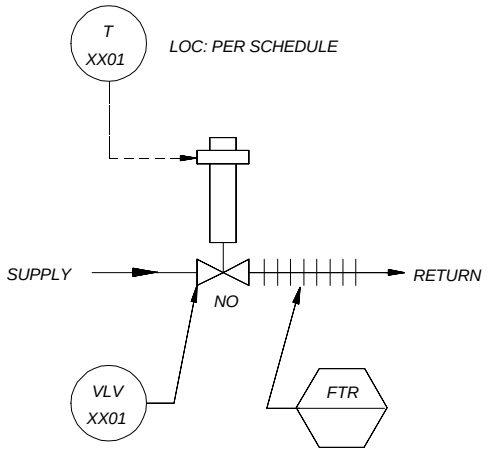

SCHEMATIC FOR MODULATING CONTROL OR 2- POSITION CONTROL

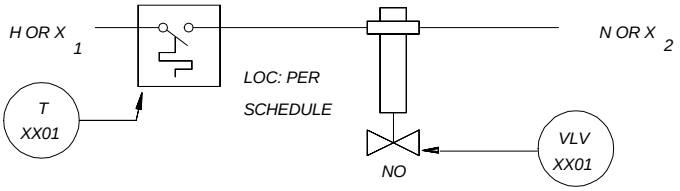

LADDER DIAGRAM FOR 2-POSITION CONTROL

SPACE	FTR	THERMOSTAT	VALVE	REMARKS
XXXX	XX	T-XX01 SET: 20 DEG C (68 DEG F)	VLV-XX01	Kv=.17 (Cv=0.2) CLOSE AGAINST 70 kPa (10 PSIG)
•	•	•	•	•
YYYY	YY	T-XXXX SET: 20 DEG C (68 DEG F)	VLV-XXXX	Kv=.60 (Cv=0.7) CLOSE AGAINST 70 kPa (10 PSIG)

EQUIPMENT SCHEDULE

Figure 4-1. Space temperature controlled perimeter radiation control system.

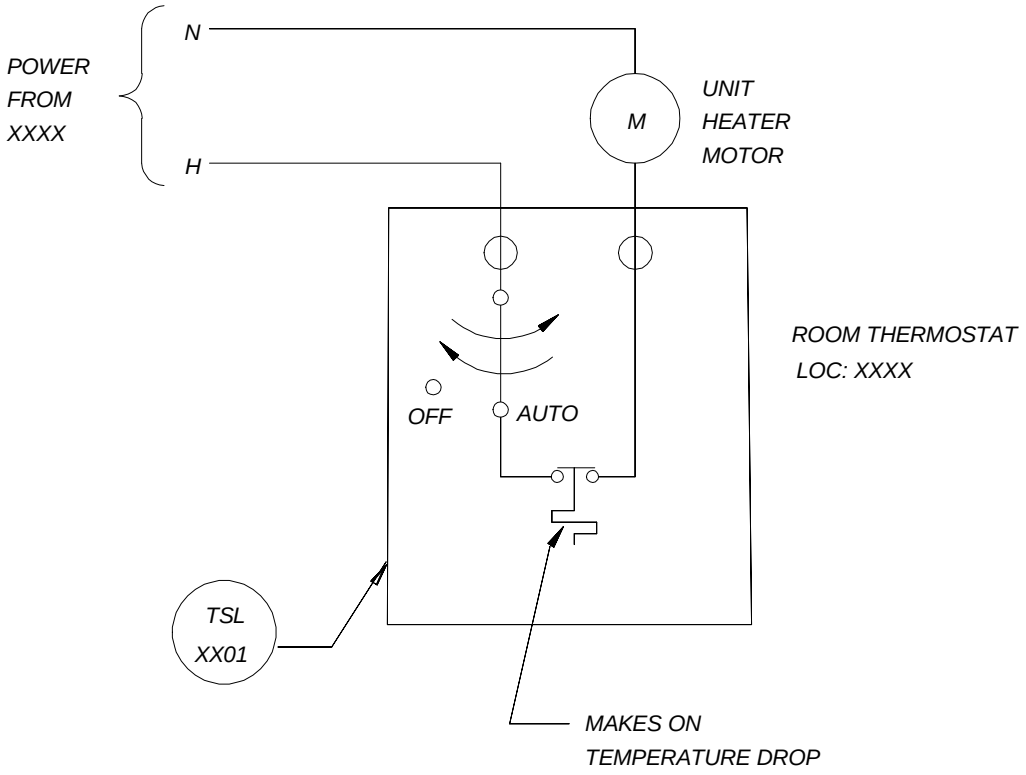

LADDER DIAGRAM

SPACE	UH	THERMOSTAT
XXXX	XX	TSL-XX01 SET: 13 C (55 F)
°	°	°
YYYY	YY	TSL-XXXX SET: 13 C (55 F)

EQUIPMENT SCHEDULE

Figure 4-2. Unit heater temperature control system.

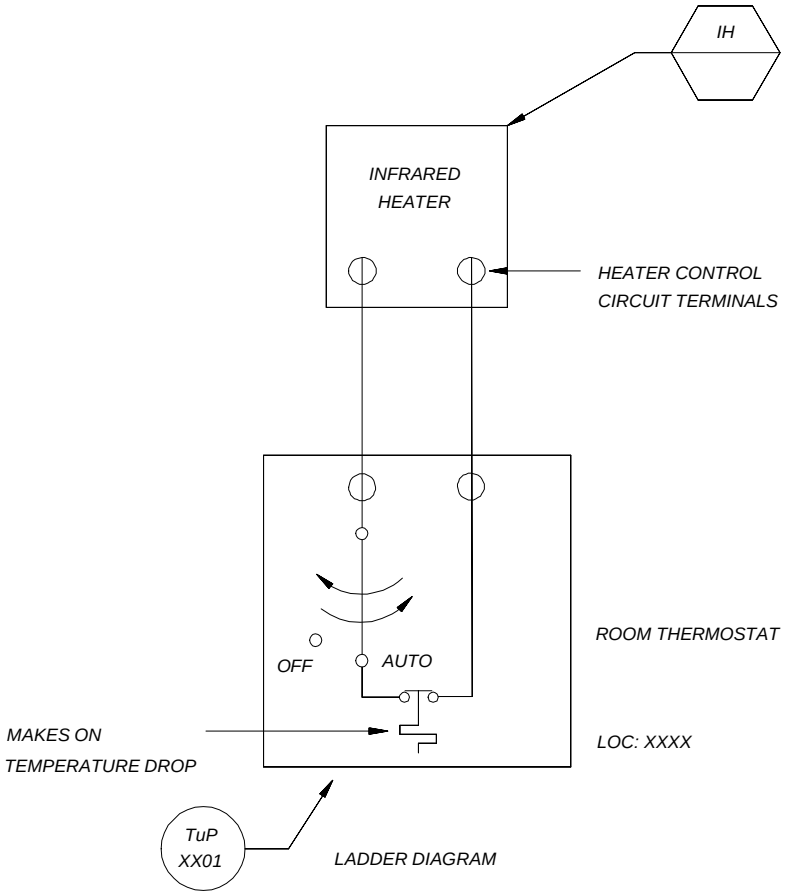

SPACE	IH	THERMOSTAT	OCCUPIED MODE
XXXX	XX	TuP-XX01 SET: 20 C (68 F) - DAY 13 C (55 F) - NIGHT	M - F M - F: 0830 TO 1730 HRS SUN: 0830 TO 1200 HRS
°	°	°	
YYYY	YY	TuP-XXXX SET: 20 C (68 F) - DAY 13 C (55 F) - NIGHT	M - F M - F: 0830 TO 1730 HRS SUN: 0830 TO 1200 HRS

EQUIPMENT SCHEDULE

Figure 4-3. Gas-fired infrared heater temperature control system.

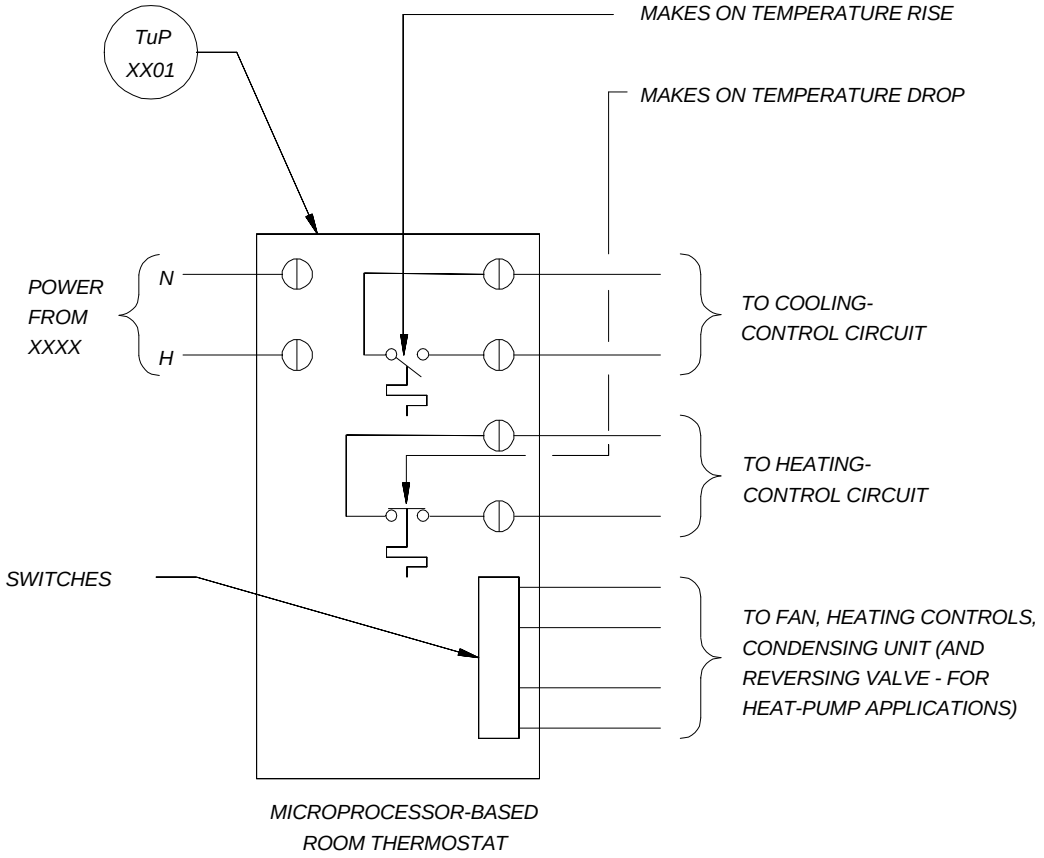

LADDER DIAGRAM

SPACE	AC	THERMOSTAT	OCCUPIED MODE
XXXX	XY	TUP-XX01 SET: 20 DEG C (68 DEG F) - DAY HEATING 13 DEG C (55 DEG F) - NIGHT HEATING 26 DEG C (78 DEG F) - DAY COOLING OFF - NIGHT COOLING	M,T,W,TH,F 0830 HRS TO 1730 HRS

EQUIPMENT SCHEDULE

Figure 4-4. Small packaged unitary system control system.

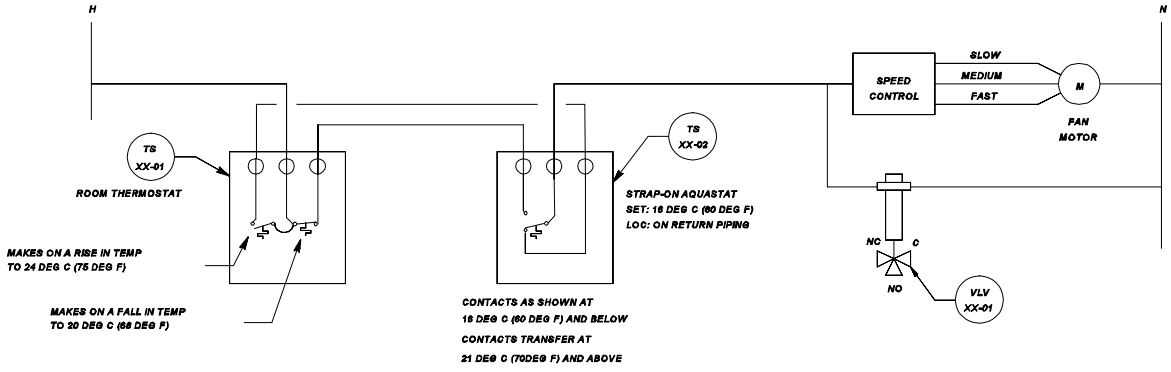

LADDER DIAGRAM

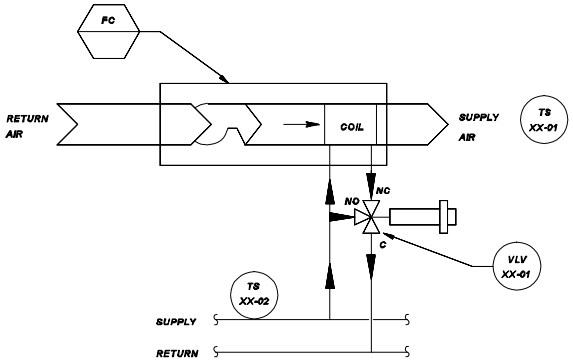

SCHEMATIC

SPACE	FC	THERMOSTAT	AQUASTAT	VALVE AND ACTUATOR	REMARKS
XXXX	XX	TS-XX-01 SET: 20 DEG C (68 DEG F) - HTG 24 DEG C (75 DEG F) - CLG	TS-XX-02 SET: 16 DEG C (60 DEG F)	VLV-XX-01	Kv=1.73 (Cv=2) CLOSE AGAINST 70 kPa (10 PSIG)
	⋮	⋮	⋮	⋮	⋮
ZZZZ	ZZ	TS-XX-XX SET: 20 DEG C (68 DEG F) - HTG 24 DEG C (75 DEG F) - CLG	TS-XX-XY SET: 16 DEG C (60 DEG F)	VLV-XX-XX	Kv=1.0 (Cv=1.2) CLOSE AGAINST 70 kPa (10 PSIG)

EQUIPMENT SCHEDULE

Figure 4-5. Dual-temperature fan coil unit temperature control system.