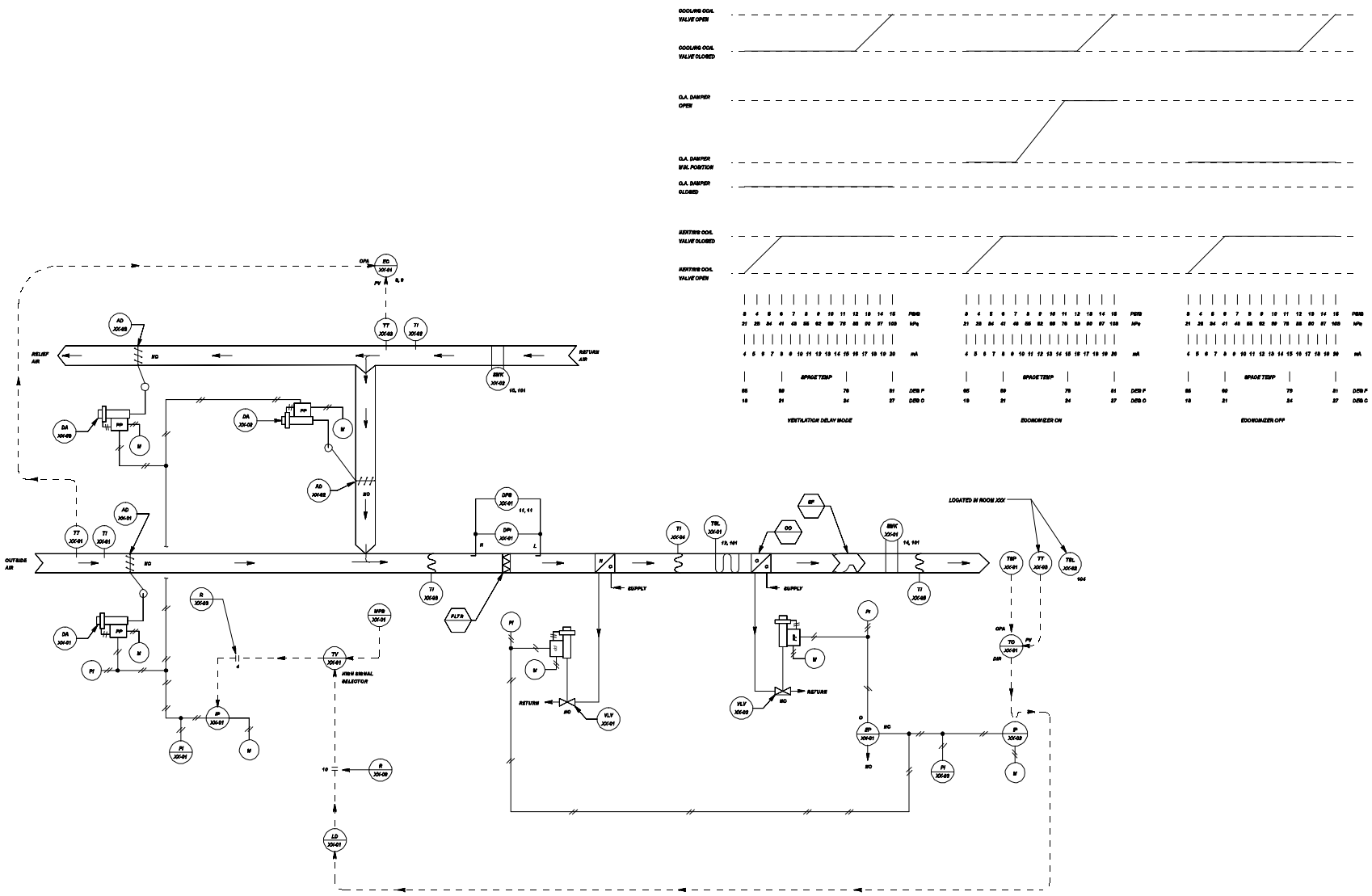

Figure 4-19a. Control system schematic for single zone HVAC system.

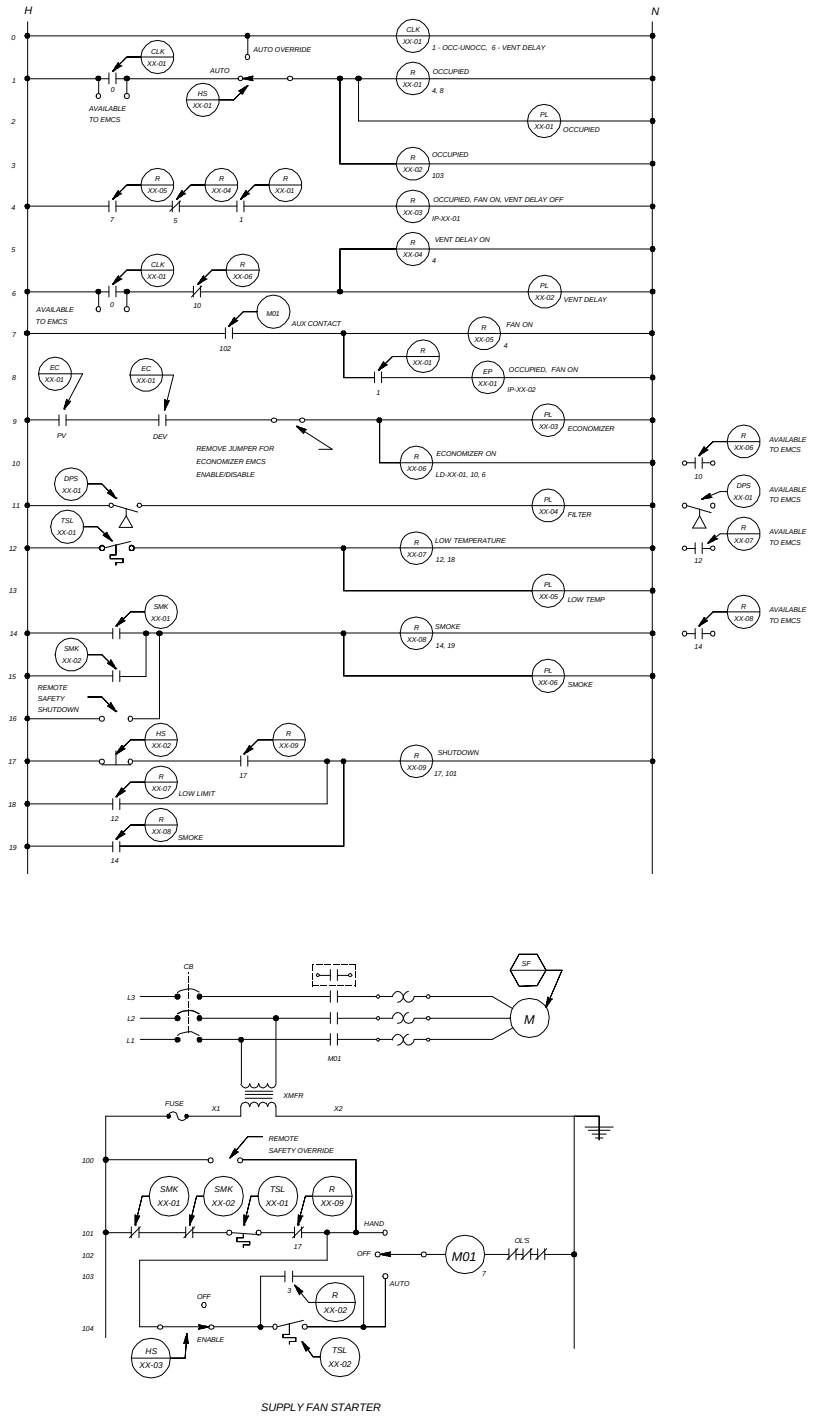

SUPPLY FAN STARTER

Figure 4-19b. Control system ladder diagram for single zone HVAC system.

LOOP CONTROL FUNCTION	DEVICE NUMBER	DEVICE FUNCTION	SETPOINT	RANGE	ADDITIONAL PARAMETERS
SPACE TEMPERATURE	DA-XX-01 DA-XX-02 DA-XX-03	DAMPER ACTUATOR	———	48 - 76 kPa (7 - 11 PSIG)	———
	MPS-XX-01	MINIMUM POSITION SWITCH	———	———	SET MIN OA L/s (CFM) EQUAL TO ___ L/S (___ CFM)
	TT-XX-01	OUTSIDE AIR TEMPERATURE TRANSMITTER	———	-34 TO 54 DEG C (-30 TO +130 DEG F)	———
	TT-XX-02	RETURN AIR TEMPERATURE TRANSMITTER	———	-34 TO 54 DEG C (-30 TO +130 DEG F)	———
	EC-XX-01	ECONOMIZER CONTROLLER	PV CONTACT CLOSE AT__ DEG C (__ DEG F) OPEN AT __ DEG C (__ DEG F)	-34 TO 54 DEG C (-30 TO +130 DEG F)	DEV CONTACT CLOSE @ DELTA T=__ DEG C (__ DEG F) OPEN @ DELTA T=__ DEG C (__ DEG F)
	VLV-XX-01	HEATING COIL VALVE	———	21 - 41 kPa (3 - 6 PSIG)	Kv = __ (Cv = __) CLOSE AGAINST __ kPa (__ PSIG)
	VLV-XX-02	COOLING COIL VALVE	———	83 - 103 kPa (12 - 15 PSIG)	Kv = __ (Cv = __) CLOSE AGAINST __ kPa (__ PSIG)
	TC-XX-01	SPACE TEMPERATURE CONTROLLER	4 mA = 10 DEG C (50 DEG F) 20 mA = 30 DEG C (85 DEG F)	10 TO 30 DEG C (50 TO 85 DEG F)	SET LIMITS AVAILABLE TO OCCUPANT BY TSP-XX-01 AT 19 TO 22 DEG C (66 TO 72 DEG F)
	TT-XX-03	SPACE TEMPERATURE TRANSMITTER	———	10 TO 30 DEG C (50 TO 85 DEG F)	———
	TSP-XX-01	SPACE TEMPERATURE SETPOINT ADJUSTMENT	4 mA = 10 DEG C (50 DEG F) 20 mA = 30 DEG C (85 DEG F)	———	———
MIXED AIR	TSL-XX-01	LOW TEMPERATURE PROTECTION THERMOSTAT	2 DEG C (35 DEG F)	———	———
	DPS-XX-01	FILTER ALARM	PER FILTER MANUFACTURER'S RECOMMENDATION	PER FILTER MANUFACTURER'S RECOMMENDATION	———
SPACE LOW TEMPERATURE	TSL-XX-02	NIGHT STAT - SPACE LOW TEMPERATURE PROTECTION	13 DEG C (55 DEG F)	DIFFERENTIAL = 3 DEG C (5 DEG F)	———
OCCUPIED MODE	CLK-XX-01 CONTACT	365 DAY SCHEDULE	———	NORMAL SCHEDULE (M-F) CONTACT CLOSED: 0705 HRS CONTACT OPEN: 1700 HRS	CONTACT OPEN: SAT, SUN
VENTILATION DELAY MODE	CLK-XX-01 CONTACT	365 DAY SCHEDULE	———	NORMAL SCHEDULE (M-F) CONTACT CLOSED: 0700 HRS CONTACT OPEN: 0800 HRS	

NOTE: OTHER CONTROL DEVICES SUCH AS I/Ps, RELAYS, AND SIGNAL SELECTERS ARE NOT SHOWN.

Figure 4-19c. Control system equipment for single zone HVAC system.

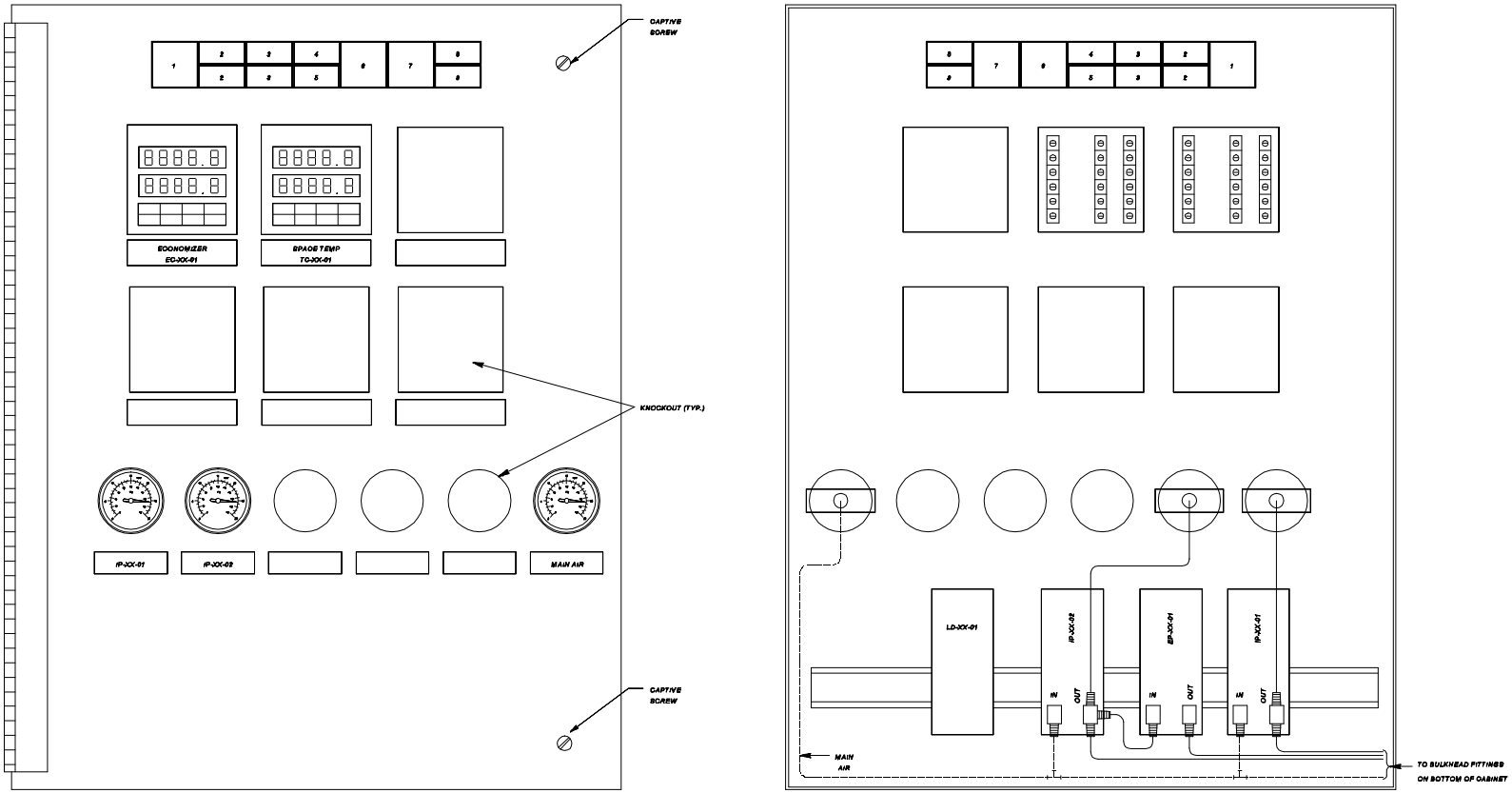

FRONT VIEW

REAR VIEW

SWITCH AND PILOT LIGHT LEGEND

POSITION LEGEND	DEVICE TYPE	IDENTIFIER	POSITION LEGEND	DEVICE TYPE	IDENTIFIER
1 - RESET	NON-ILLUMINATED MOMENTARY CONTACT PUSH BUTTON SWITCH	HS-XX-02	6 - FILTER	PILOT LIGHT	PL-XX-04
2 - AUTO/AUTO OVERRIDE	ILLUMINATED MAINTAINED CONTACT INTERLOCKED SWITCHES	HS-XX-01	7 - OCC	PILOT LIGHT	PL-XX-01
3 - ENABLE/OFF	ILLUMINATED MAINTAINED CONTACT INTERLOCKED SWITCHES	HS-XX-03	8 - VENT DELAY	PILOT LIGHT	PL-XX-02
4 - LOW TEMP	PILOT LIGHT	PL-XX-05	9 - ECON	PILOT LIGHT	PL-XX-03
5 - SMOKE	PILOT LIGHT	PL-XX-06			

Figure 4-19d. Control panel interior door layout for single zone HVAC system.

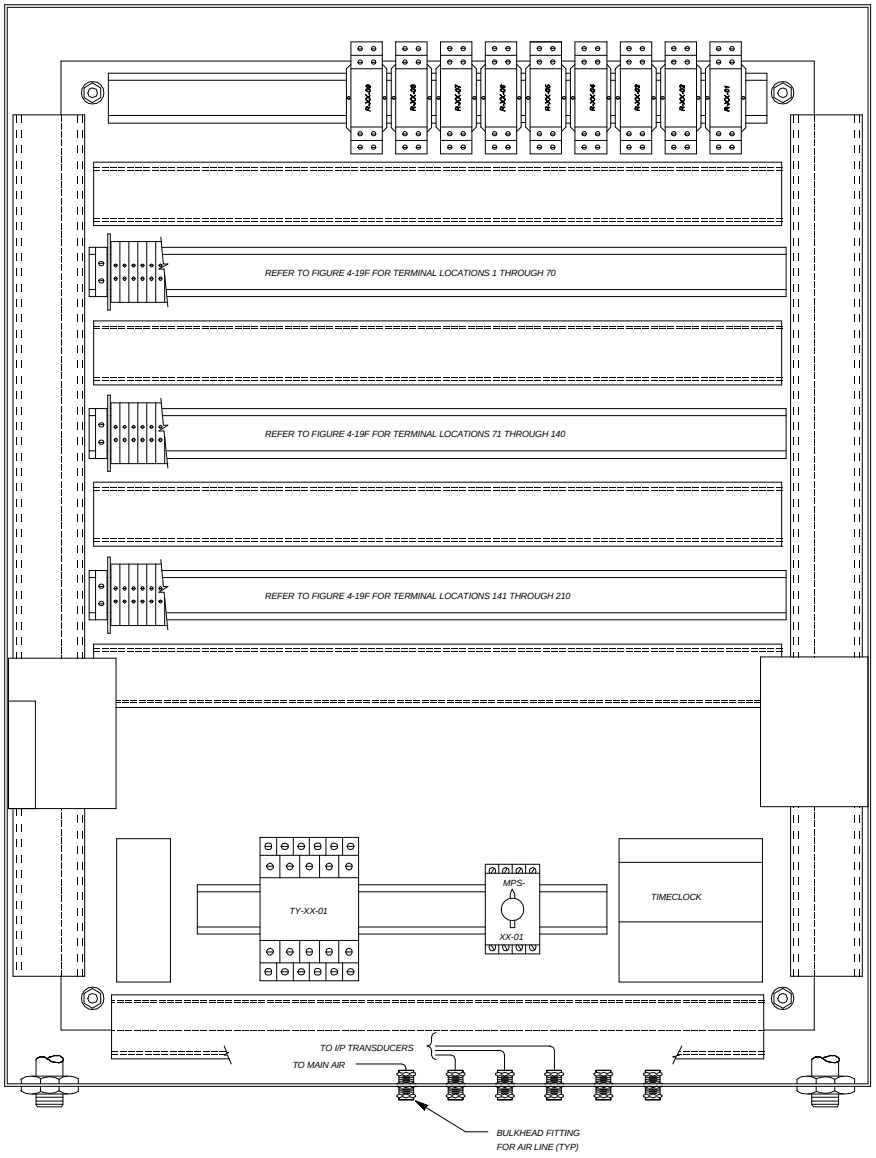

Figure 4-19e. Control panel back panel layout for single zone HVAC system.

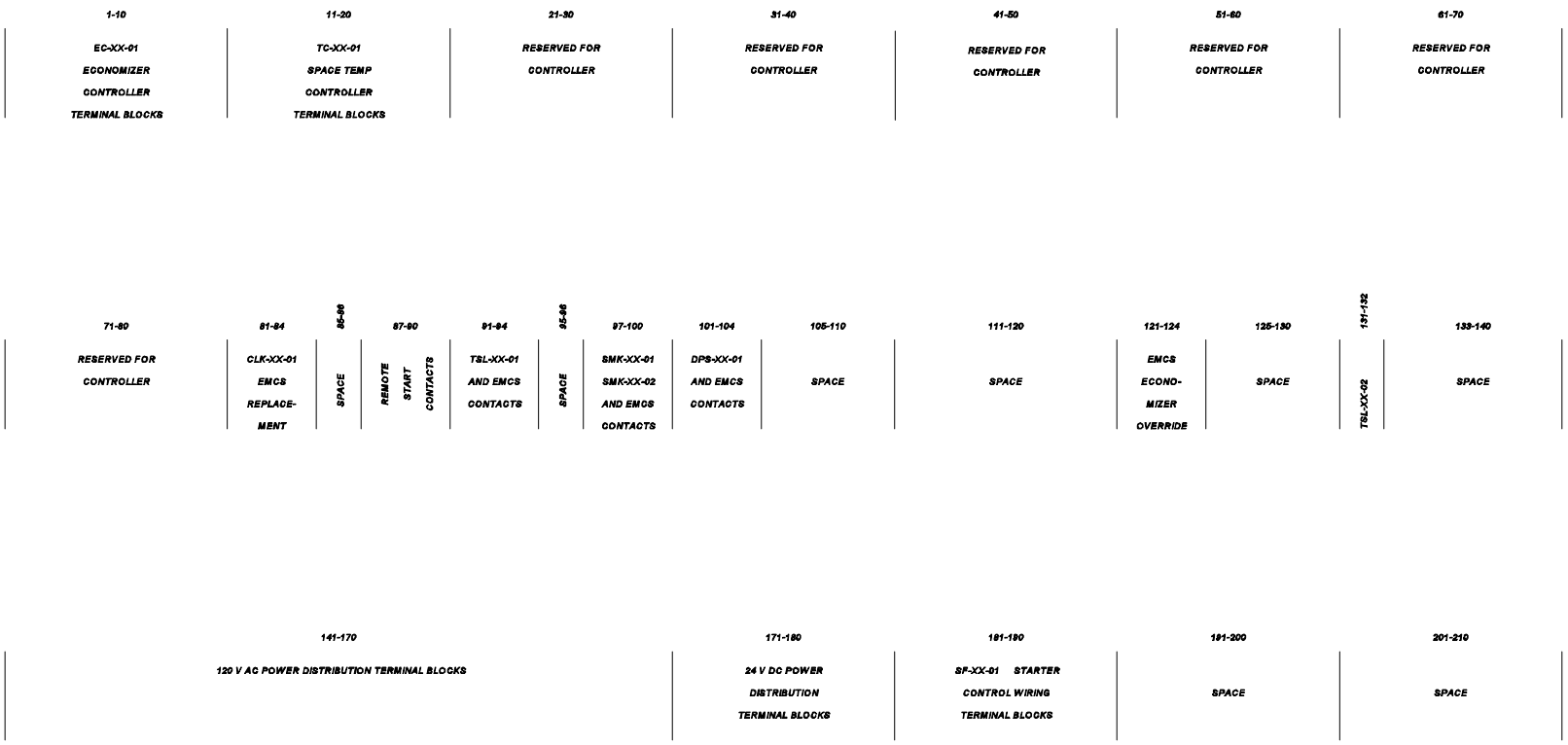

Figure 4-19f. Control panel terminal block layout for single zone HVAC system.

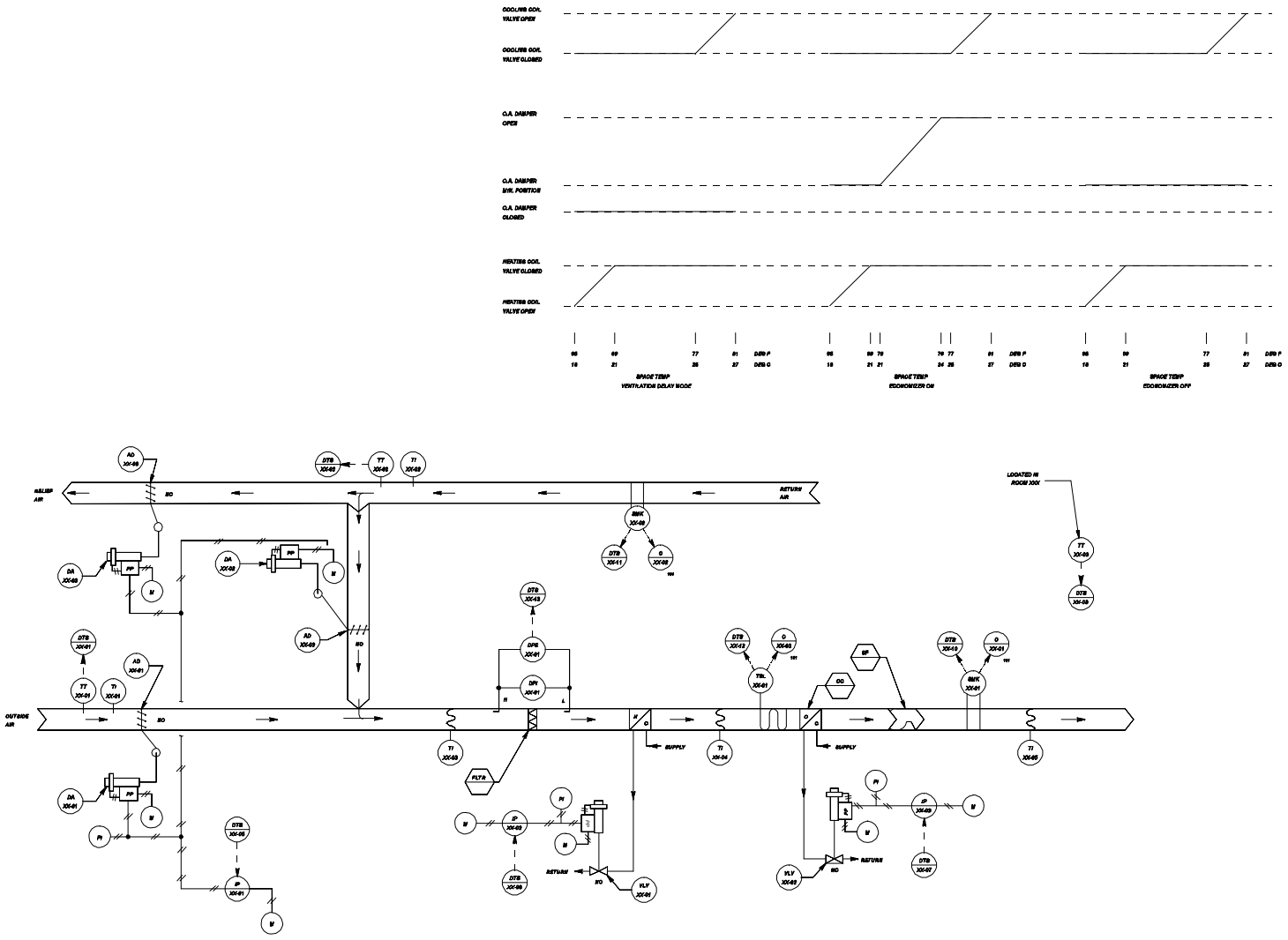

Figure 4-19g. DDC control system schematic for single zone HVAC system.

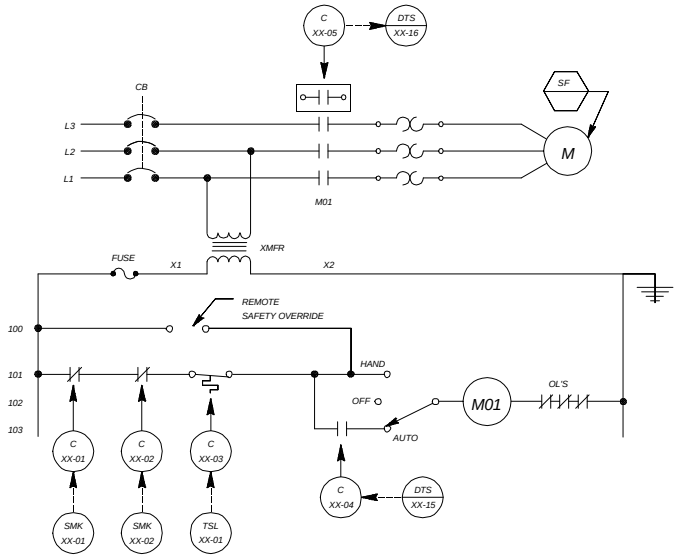

Figure 4-19h. DDC control system ladder diagram for single zone HVAC system.

SENSOR SCHEDULE

IDENTIFIER	FUNCTION	RANGE
TT-XX-01	OUTSIDE AIR TEMPERATURE TRANSMITTER	-34 TO 54 DEG C (-30 TO +130 DEG F)
TT-XX-02	RETURN AIR TEMPERATURE TRANSMITTER	-34 TO 54 DEG C (-30 TO +130 DEG F)
TT-XX-03	SPACE TEMPERATURE TRANSMITTER	10 TO 30 DEG C (50 TO 85 DEG F)

CONTROL VALVE SCHEDULE

IDENTIFIER	FUNCTION	TYPE	RANGE	Kv (Cv)	CLOSE-OFF RATING	REMARKS
VLV-XX-01	HEATING COIL VALVE	2-WAY, MODULATING	21 - 103 kPa (3-15 PSIG)	XX	XX kPa (XX PSIG)	
VLV-XX-02	COOLING COIL VALVE	2-WAY, MODULATING	21 - 103 kPa (3-15 PSIG)	XX	XX kPa (XX PSIG)	

CONTROL DAMPER SCHEDULE

IDENTIFIER	FUNCTION	TYPE	SIZE	RANGE	REMARKS
AD-XX-01	OUTSIDE AIR	MODULATING	W x H (mm) (WW" X HH")	21 - 103 kPa (3-15 PSIG)	PARALLEL BLADE
AD-XX-02	RETURN AIR	MODULATING	W x H (mm) (WW" X HH")		PARALLEL BLADE
AD-XX-03	RELIEF AIR	MODULATING	W x H (mm) (WW" X HH")		PARALLEL BLADE

OPERATING PARAMETERS

FUNCTION	SETPOINT	REMARKS
MINIMUM OUTSIDE AIR	XXXX L/s (XXXX CFM)	
SPACE TEMPERATURE	XX DEG C (XX DEG F) XX DEG C (XX DEG F)	(HEATING) (COOLING)
SPACE TEMP. (NIGHT SETBACK)	XX DEG C (XX DEG F)	(HEATING ONLY)
ECONOMIZER MODE		ECONOMIZER MODE = ON, WHEN CONDITION 1 AND CONDITION 2 ARE BOTH SATISFIED. CONDITION 1: RETURN AIR TEMP. > XX DEG C (XX DEG F) CONDITION 2: RETURN AIR TEMP. MINUS OUTSIDE AIR TEMP. > XX DEG C (XX DEG F)
OCCUPIED MODE		MONDAY - FRIDAY : 0705 HRS - 1700 HRS
VENT DELAY MODE		MONDAY - FRIDAY : 0700 HRS - 0800 HRS
FREEZESTAT	XX DEG C (XX DEG F)	
FILTER ALARM	XX kPa (XX IN. WATER)	

Figure 4-19i. DDC control system equipment for single zone HVAC system.

	HARDWARE																											SOFTWARE															
	OUTPUT												INPUT															ALARMS								APPLICATION PROGRAMS											
	DIGITAL						ANALOG						DIGITAL						ANALOG									DIGITAL				ANALOG															
	CONTROL RELAY						POSITION ADJUSTMENT						AUXILARY CONTACT						TEMPERATURE	% RELATIVE HUMIDITY	PSIG, PSIA, PSID	FLOW						CONTACT CLOSURE				HIGH LIMIT	LOW LIMIT	RUN TIME		SCHEDULED START/STOP	OPTIMUM START/STOP	DUTY CYCLING	DEMAND LIMITING	DAY/NIGHT SETBACK	ECONOMIZER	VENTILATION/RECIRCULATION							FAILURE MODE **
SUPPLY FAN	1												1															X						X		X	X	X	X								
OUTSIDE AIR																			1														X														
RETURN AIR																			1												X	X															
SPACE																			1												X	X							X	X							
MIXED AIR DAMPERS							1																																X	X							
HEATING COIL VALVE							1																																								
COOLING COIL VALVE							1																																								
SMOKE DETECTOR													2															X																			
FREEZESTAT													1															X																			
FILTER													1															X																			

** C - LAST COMMAND
H - HIGH VALUE
L - LOW VALUE

O - ON (OPEN)
F - OFF (CLOSED)

DDC DATA TERMINAL STRIP LAYOUT

	DEVICE NO.	DESCRIPTION	TYPE
1	TT-XX-01	OUTSIDE AIR TEMPERATURE	AI
2	TT-XX-02	RETURN AIR TEMPERATURE	AI
3	TT-XX-03	SPACE TEMPERATURE	AI
4			
5	IP-XX-01	MIXED AIR DAMPERS	AO
6	IP-XX-02	HEATING COIL VALVE	AO
7	IP-XX-03	COOLING COIL VALVE	AO
8			
9			
10	SMK-XX-01	SUPPLY AIR SMOKE DETECTOR	DI
11	SMK-XX-02	RETURN AIR SMOKE DETECTOR	DI
12	TSL-XX-01	FREEZESTAT	DI
13	DPS-XX-01	FILTER ALARM	DI
14			
15	C-XX-04	SUPPLY FAN START/STOP	DO
16	C-XX-05	SUPPLY FAN STATUS	DI
17			
18			
19			
20			

Figure 4-19j. DDC control system I/O table and data terminal strip layout for single zone HVAC system.