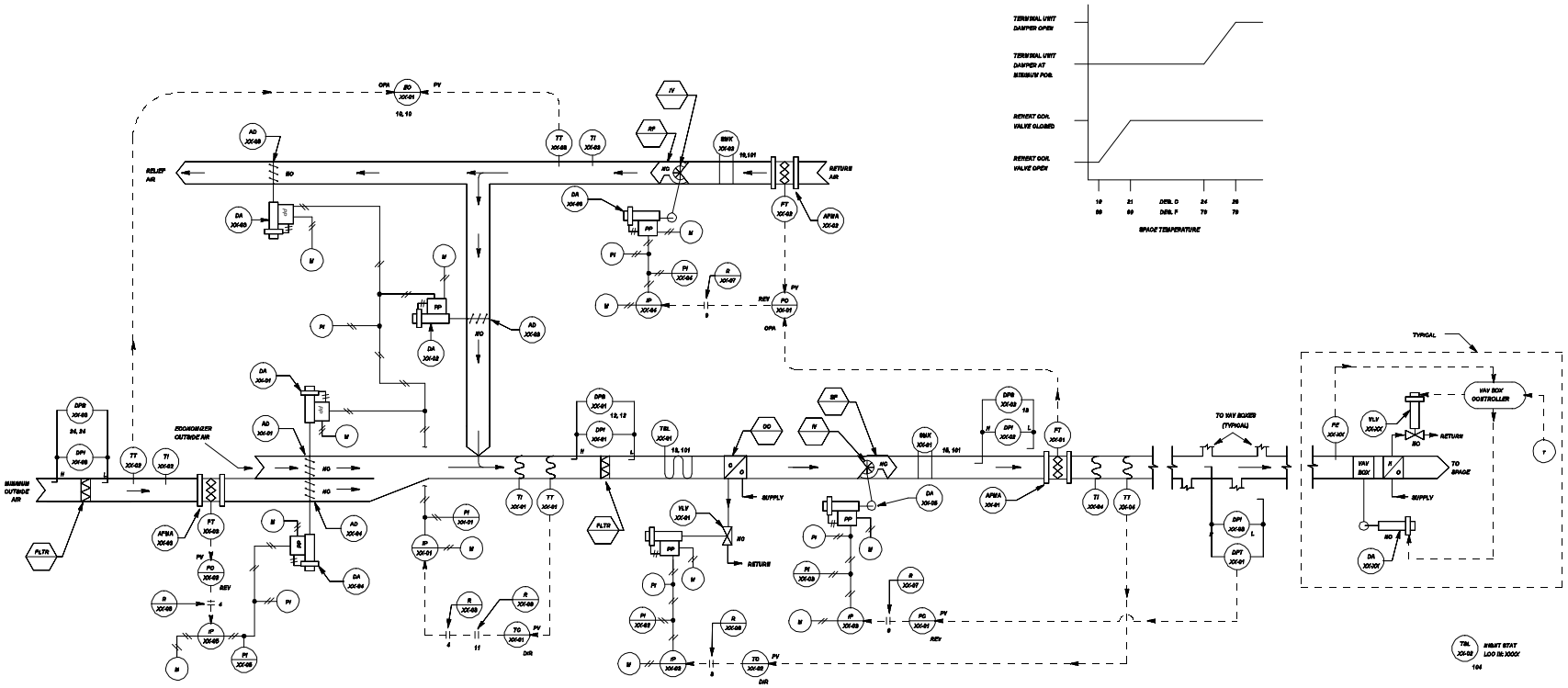

Figure 4-18a. Control system schematic for VAV HVAC system with return fan.

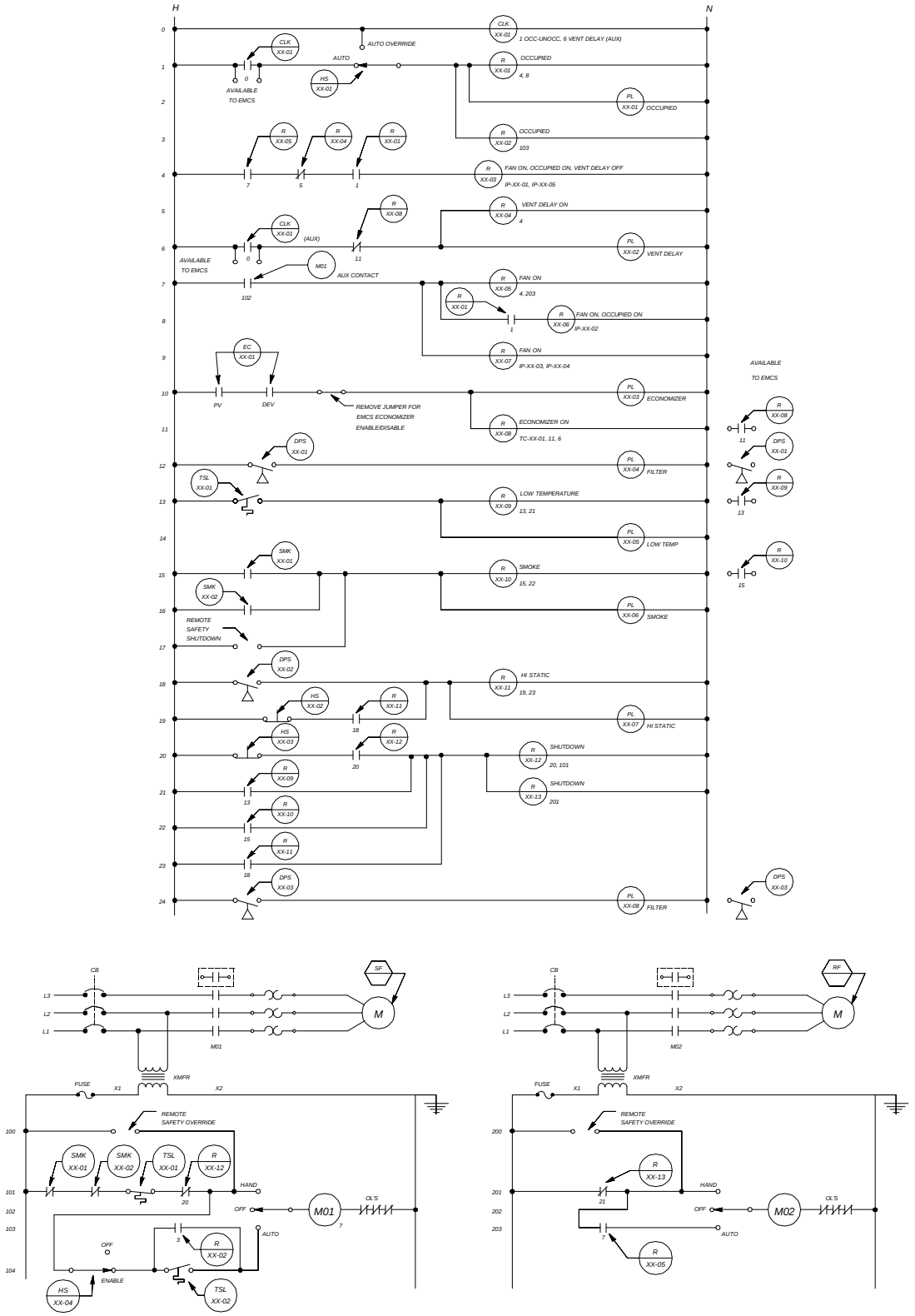

Figure 4-18b. Control system ladder diagram for VAV HVAC system with return fan.

LOOP CONTROL FUNCTION	DEVICE NUMBER	DEVICE FUNCTION	SETPOINT	RANGE	ADDITIONAL PARAMETERS
MIXED AIR TEMPERATURE	DA-XX-01 DA-XX-02 DA-XX-03	DAMPER ACTUATOR	———	21-103 kPa (3-15 PSIG)	———
	TC-XX-01	MIXED AIR TEMPERATURE CONTROLLER	13 DEG C (55 DEG F)	4 TO 60 DEG C (40 TO 140 DEG F)	———
	TT-XX-01	MIXED AIR TEMPERATURE TRANSMITTER	———	4 TO 60 DEG C (40 TO 140 DEG F)	———
	TT-XX-02	OUTSIDE AIR TEMPERATURE TRANSMITTER	———	-34 TO 54 DEG C (-30 TO 130 DEG F)	———
	TT-XX-03	RETURN AIR TEMPERATURE TRANSMITTER	———	-34 TO 54 DEG C (-30 TO 130 DEG F)	———
	EC-XX-01	ECONOMIZER CONTROLLER	PV CONTACT CLOSE AT __ DEG C (__ DEG F) OPEN AT __ DEG C (__ DEG F)	-34 TO 54 DEG C (-30 TO 130 DEG F)	DEV CONTACT CLOSE @ DELTA T= __ DEG C (__ DEG F) OPEN @ DELTA T= __ DEG C (__ DEG F)
	TSL-XX-01	LOW TEMPERATURE PROTECTION THERMOSTAT	2 DEG C (35 DEG F)	———	———
	DPS-XX-01	FILTER ALARM	PER FILTER MANUFACTURER'S RECOMMENDATION	PER FILTER MANUFACTURER'S RECOMMENDATION	———
MIN. OUTSIDE AIR FLOW	DA-XX-04	DAMPER ACTUATOR	———	21 - 103 kPa (3-15 PSIG)	———
	FC-XX-02	MIN. OUTSIDE AIR DUCT FLOW CONTROLLER	Min OA = __ L/s (__ cfm)	0 - ___ L/s (0 - ___ CFM)	(SEE NOTE 1)
	FT-XX-03	MIN. OUTSIDE AIR DUCT FLOW TRANSMITTER	———	0 - ___ m/s (0 - ___ FPM)	UPPER RANGE AS REQUIRED (SEE SPECIFICATIONS)
	DPS-XX-03	PRE-FILTER ALARM	PER FILTER MANUFACTURER'S RECOMMENDATION	PER FILTER MANUFACTURER'S RECOMMENDATION	———
SPACE LOW TEMPERATURE	TSL-XX-02	NIGHT STAT - SPACE LOW TEMPERATURE PROTECTION	13 DEG C (55 DEG F)	DIFFERENTIAL = 3 DEG C (5 DEG F)	———
DISCHARGE AIR TEMPERATURE	VLV-XX-01	COOLING COIL VALVE	———	21-103 kPa (3-15 PSIG)	Kv = __ (Cv = __) CLOSE AGAINST __ kPa (__ PSIG)
	TC-XX-02	FAN DISCHARGE TEMPERATURE CONTROLLER	13 DEG C (55 DEG F)	4 TO 60 DEG C (40 TO 140 DEG F)	———
	TT-XX-04	FAN DISCHARGE TEMPERATURE TRANSMITTER	———	4 TO 60 DEG C (40 TO 140 DEG F)	———
SUPPLY DUCT STATIC PRESSURE	DA-XX-05	SUPPLY FAN INLET VANE ACTUATOR	———	21 - 103 kPa (3-15 PSIG)	———
	PC-XX-01	SUPPLY DUCT STATIC PRESSURE CONTROLLER	300 kPa (1.2 INCHES WATER)	0 - 500 kPa (0.0 - 2.0 INCHES WATER)	———
	DPT-XX-01	SUPPLY DUCT STATIC PRESSURE TRANSMITTER	———	0 - 500 kPa (0.0 - 2.0 INCHES WATER)	———
	DPS-XX-02	SUPPLY DUCT - HIGH STATIC PRESSURE SAFETY	———	1000 - 1500 kPa (4.0 - 6.0 INCHES WATER)	———
RETURN FAN VOLUME	DA-XX-06	RETURN FAN INLET VANE ACTUATOR	———	21 - 103 kPa (3-15 PSIG)	———
	FC-XX-01	RETURN FAN VOLUME CONTROLLER	SUPPLY FAN L/s (CFM) MINUS ___ L/S (___ CFM)	0 - 9500 L/s (0 - 20,000 CFM)	———
	FT-XX-01	SUPPLY DUCT FLOW TRANSMITTER (FPM)	———	0 - 9500 L/s (0 - 20,000 CFM)	———
	FT-XX-02	RETURN DUCT FLOW TRANSMITTER (FPM)	———	0 - 9500 L/s (0 - 20,000 CFM)	———
OCCUPIED MODE	CLK-XX-01 CONTACT	365 DAY SCHEDULE	———	NORMAL SCHEDULE (M-F) CONTACT CLOSED: 0705 HRS CONTACT OPEN: 1700 HRS	CONTACT OPEN: SAT, SUN
VENTILATION DELAY MODE	CLK-XX-01 CONTACT	365 DAY SCHEDULE	———	NORMAL SCHEDULE (M-F) CONTACT CLOSED: 0700 HRS CONTACT OPEN: 0800 HRS	
TERMINAL UNITS	VLV-XX-AA	HEATING COIL VALVE SPACE AA	———	———	Kv = __ (Cv = __) CLOSE AGAINST __ kPa (__ PSIG)
	•	•	•	•	•
	VLV-XX-ZZ	HEATING COIL VALVE SPACE ZZ	———	———	Kv = __ (Cv = __) CLOSE AGAINST __ kPa (__ PSIG)

NOTES:

1. Upper range (L/s) of flow controller (FC-XX-XX) = Upper range (m/s) of associated flow transmitt er (FT-XX-XX) TIMES the duct area (sq m) TIMES 1000 (L/cu. m).
(Upper range (CFM) of flow controller (FC-XX-XX) = Upper range (fpm) of associated flow transmitte r (FT-XX-XX) TIMES the duct area (sq ft).

2. OTHER CONTROL DEVICES SUCH AS I/Ps, RELAYS, SIGNAL SELECTERS AND TERMINAL UNIT CONTROLLERS ARE NOT SHOWN.

Figure 4-18c. Control system equipment for VAV HVAC system with return fan.

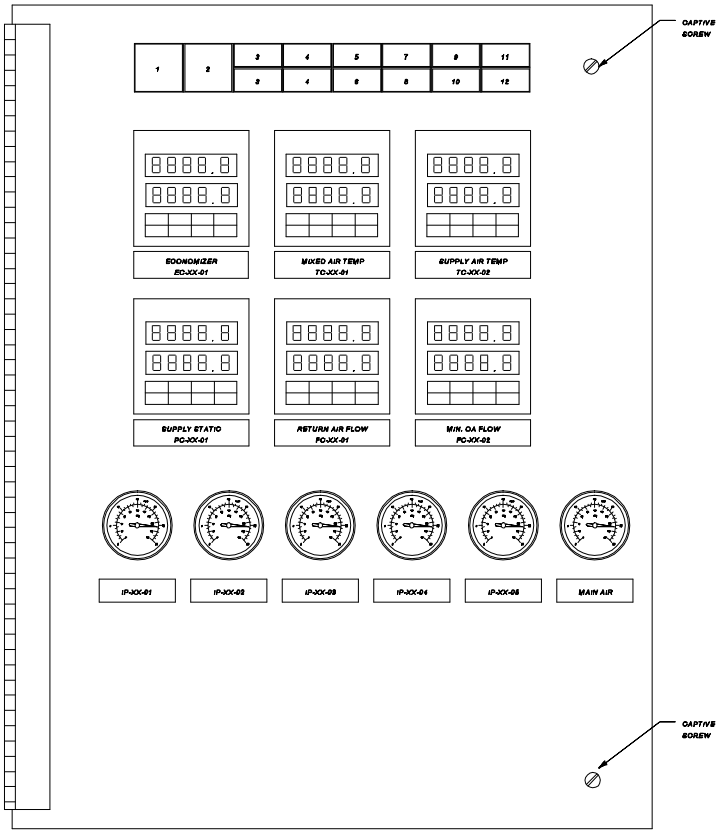

FRONT VIEW

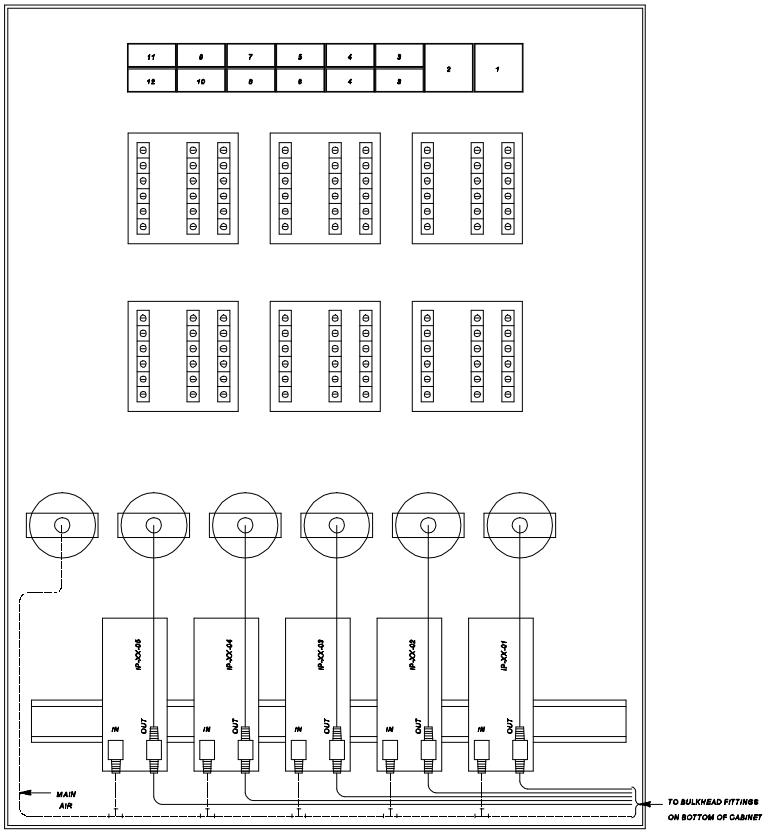

REAR VIEW

SWITCH AND PILOT LIGHT LEGEND

POSITION LEGEND	DEVICE TYPE	IDENTIFIER	POSITION LEGEND	DEVICE TYPE	IDENTIFIER
1 - RESET	NON-ILLUMINATED MOMENTARY CONTACT PUSH BUTTON SWITCH	HS-XX-03	7 - HIGH STATIC	PILOT LIGHT	PL-XX-07
2 - STATIC RESET	NON-ILLUMINATED MOMENTARY CONTACT PUSH BUTTON SWITCH	HS-XX-02	8 - FILTER	PILOT LIGHT	PL-XX-04
3 - AUTO/AUTO OVERRIDE	ILLUMINATED MAINTAINED CONTACT INTERLOCKED SWITCHES	HS-XX-01	9 - OCC	PILOT LIGHT	PL-XX-01
4 - ENABLE/OFF	ILLUMINATED MAINTAINED CONTACT INTERLOCKED SWITCHES	HS-XX-04	10 - VENT DELAY	PILOT LIGHT	PL-XX-02
5 - LOW TEMP	PILOT LIGHT	PL-XX-05	11 - ECON	PILOT LIGHT	PL-XX-03
6 - SMOKE	PILOT LIGHT	PL-XX-06	12 - FILTER	PILOT LIGHT	PL-XX-08

Figure 4-18d. Control panel interior door layout for VAV HVAC system with return fan.

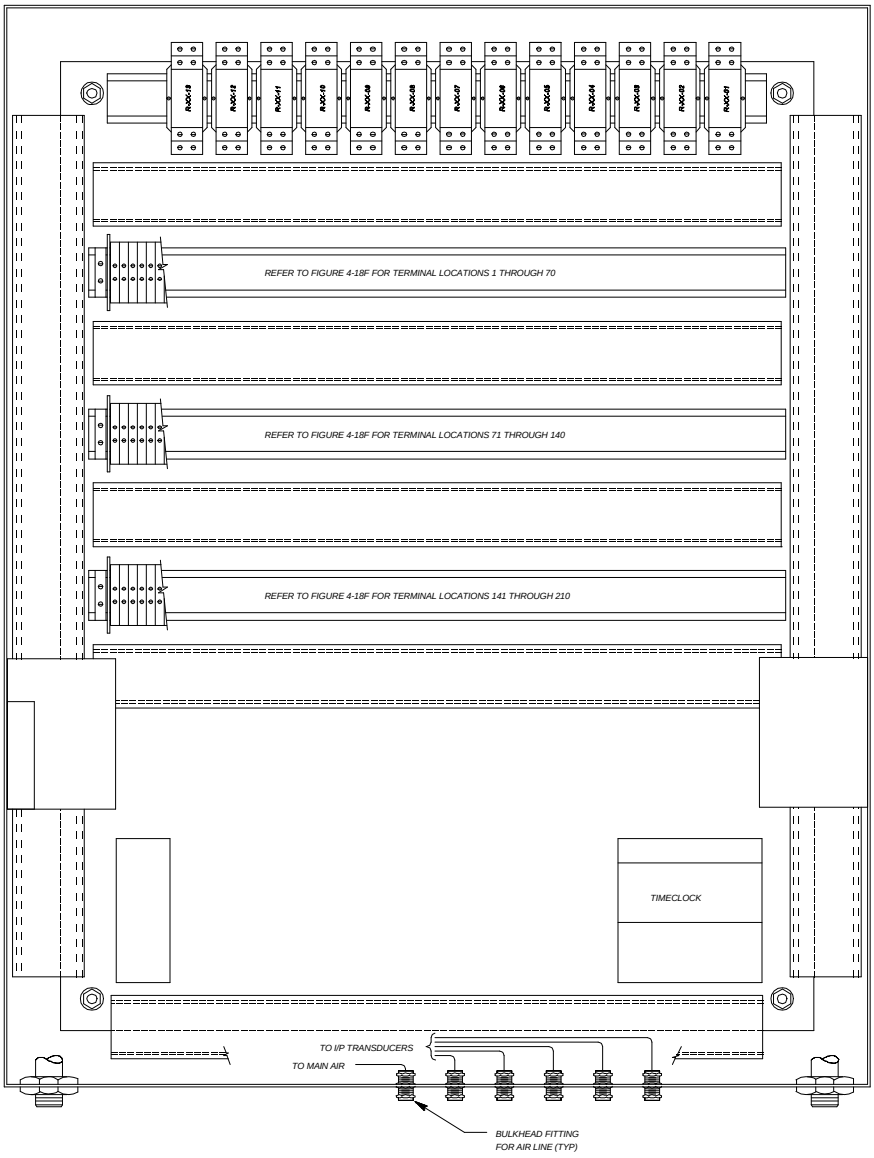

Figure 4-18e. Control panel back panel layout for VAV HVAC system with return fan.

1-10	11-20	21-30	31-40	41-50	51-60	61-70
EC-XX-01 ECONOMIZER CONTROLLER TERMINAL BLOCKS	TC-XX-01 MIXED AIR TEMP CONTROLLER TERMINAL BLOCKS	TC-XX-02 SUPPLY AIR TEMP CONTROLLER TERMINAL BLOCKS	PC-XX-01 SUPPLY DUCT STATIC PRESSURE CONTROLLER TERMINAL BLOCKS	FC-XX-01 RETURN AIR FLOW CONTROLLER TERMINAL BLOCKS	FC-XX-02 MINIMUM OUTSIDE AIR FLOW CONTROLLER TERMINAL BLOCKS	RESERVED FOR CONTROLLER

71-80	81-84	85-86	87-90	91-94	95-96	97-100	101-104	105-108	109-110	111-112	113-120	121-124	125-130	131-132	133-140
RESERVED FOR CONTROLLER	CLK-XX-01 EMCS REPLACE-MENT	SPACE	REMOTE START CONTACTS	TSL-XX-01 AND EMCS CONTACTS	SPACE	SMK-XX-01 SMK-XX-02 AND EMCS CONTACTS	DPS-XX-01 AND EMCS CONTACTS	DPS-XX-03 AND EMCS CONTACTS	SPACE	DPS-XX-02	SPACE	EMCS ECOND-MIZER OVERRIDE	SPACE	TSL-XX-02	SPACE

141-170	171-180	181-190	191-200	201-210
120 V AC POWER DISTRIBUTION TERMINAL BLOCKS	24 V DC POWER DISTRIBUTION TERMINAL BLOCKS	SF-XX-01 STARTER CONTROL WIRING TERMINAL BLOCKS	RF-XX-01 STARTER CONTROL WIRING TERMINAL BLOCKS	SPACE

Figure 4-18f. Control panel terminal block layout for VAV HVAC system with return fan.

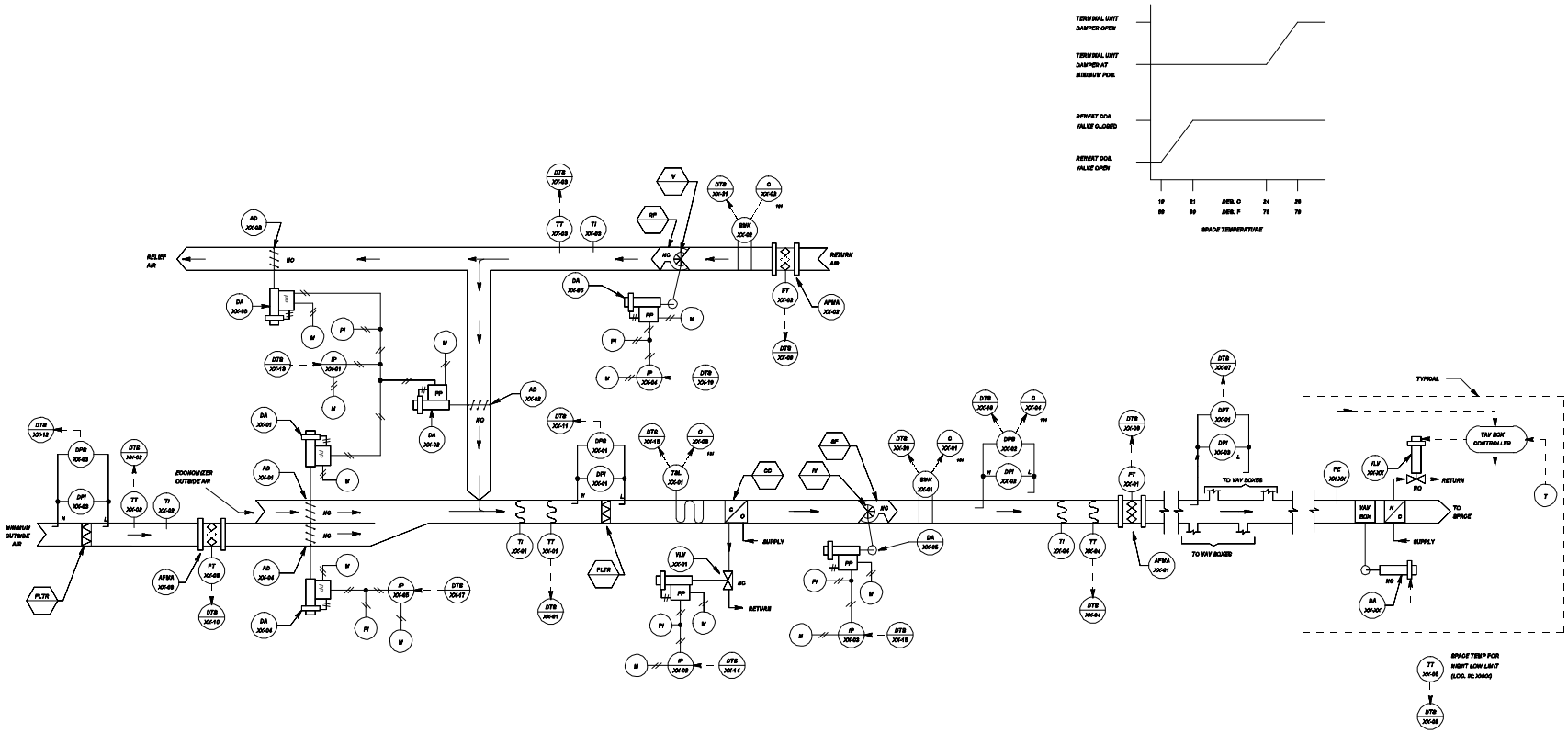

Figure 4-18g. DDC control system schematic for VAV HVAC system with return fan.

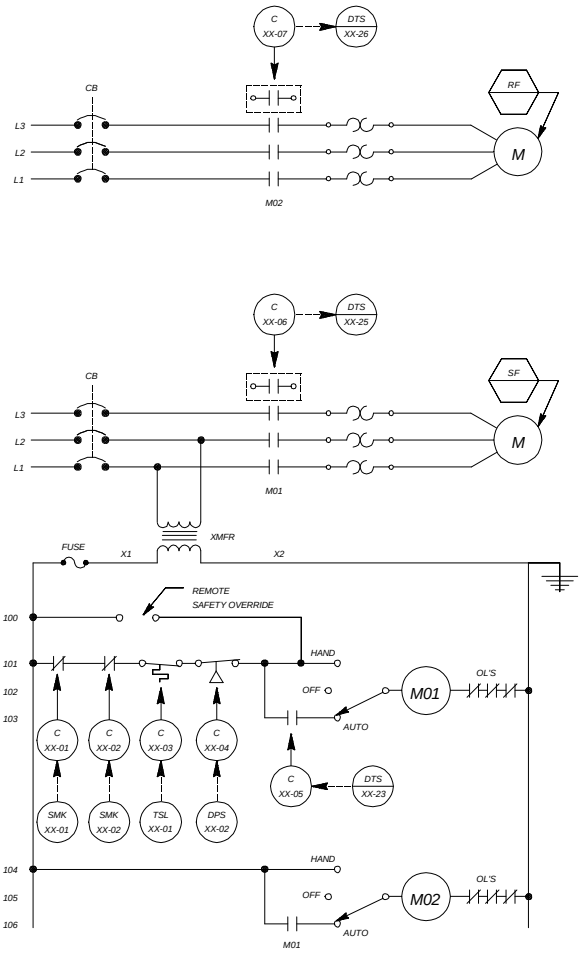

Figure 4-18h. DDC control system ladder diagram for VAV HVAC system with return fan.

SENSOR SCHEDULE

IDENTIFIER	FUNCTION	RANGE
TT-XX-01	MIXED AIR TEMPERATURE TRANSMITTER	4 TO 60 DEG C (40 TO 140 DEG F)
TT-XX-02	OUTSIDE AIR TEMPERATURE TRANSMITTER	-34 TO 54 DEG C (-30 TO +130 DEG F)
TT-XX-03	RETURN AIR TEMPERATURE TRANSMITTER	4 TO 60 DEG C (40 TO 140 DEG F)
TT-XX-04	SUPPLY AIR TEMPERATURE TRANSMITTER	4 TO 60 DEG C (40 TO 140 DEG F)
TT-XX-05	SPACE AIR TEMPERATURE TRANSMITTER	10 TO 30 DEG C (50 TO 85 DEG F)
FT-XX-01	SUPPLY AIR FLOW TRANSMITTER	0 - __ m/s (__ FPM)
FT-XX-02	RETURN AIR FLOW TRANSMITTER	0 - __ m/s (__ FPM)
FT-XX-03	MINIMUM OUTSIDE AIR FLOW TRANSMITTER	0 - __ m/s (__ FPM)
DPT-XX-01	SUPPLY AIR STATIC PRESSURE TRANSMITTER	0 - 500 kPa (0.0 - 2.0 IN. WATER)

CONTROL VALVE SCHEDULE

IDENTIFIER	FUNCTION	TYPE	RANGE	Kv (Cv)	CLOSE-OFF RATING	REMARKS
VLV-XX-01	COOLING COIL VALVE	2-WAY, MODULATING	21 - 103 kPa (3-15 PSIG)	XX	__ kPa (__ PSIG)	
VLV-XX-AA	TERMINAL UNIT HEATING COIL	2-WAY, MODULATING	———	XX	__ kPa (__ PSIG)	
●	●	●	●	●	●	
VLV-XX-ZZ	TERMINAL UNIT HEATING COIL	2-WAY, MODULATING	———	XX	__ kPa (__ PSIG)	

CONTROL DAMPER SCHEDULE

IDENTIFIER	FUNCTION	TYPE	SIZE	RANGE	REMARKS
AD-XX-01	ECONOMIZER OUTSIDE AIR	MODULATING	W X H	21 - 103 kPa (3-15 PSIG)	PARALLEL BLADE
AD-XX-02	RETURN AIR	MODULATING	W X H		PARALLEL BLADE
AD-XX-03	RELIEF AIR	MODULATING	W X H		PARALLEL BLADE
AD-XX-04	MINIMUM OUTSIDE AIR	MODULATING	W X H		PARALLEL BLADE
DA-XX-05	SUPPLY FAN FLOW	INLET VANE	———		
DA-XX-06	RETURN FAN FLOW	INLET VANE	———		

OPERATING PARAMETERS

FUNCTION	SETPOINT	REMARKS
MINIMUM OUTSIDE AIR	__ L/s (__ CFM)	
MIXED AIR TEMPERATURE	__ DEG C (__ DEG F)	
SUPPLY AIR TEMPERATURE	__ DEG C (__ DEG F)	
SPACE TEMP. (NIGHT SETBACK)	__ DEG C (__ DEG F)	(HEATING ONLY)
SUPPLY AIR STATIC PRESSURE	__ kPa (__ IN. WATER)	
RETURN AIR FLOW		SUPPLY AIR FLOW MINUS ____ L/s (____ CFM)
ECONOMIZER MODE		ECONOMIZER MODE = ON, WHEN CONDITION 1 AND CONDITION 2 ARE BOTH SATISFIED. **CONDITION 1: RETURN AIR TEMP. > XX DEG C** (__ DEG F) CONDITION 2: RETURN AIR TEMP. MINUS OUTSIDE AIR TEMP. > __ DEG C (__ DEG F)
OCCUPIED MODE		MONDAY - FRIDAY : 0705 HRS - 1700 HRS
VENT DELAY MODE		MONDAY - FRIDAY : 0700 HRS - 0800 HRS
FREEZESTAT	__ DEG C (__ DEG F)	
MIN OA FILTER ALARM	__ kPa (__ IN. WATER)	
MAIN FILTER ALARM	__ kPa (__ IN. WATER)	
HIGH STATIC ALARM	__ kPa (__ IN. WATER)	

Figure 4-18i. DDC control system equipment for VAV HVAC system with return fan.

	HARDWARE																						SOFTWARE																
	OUTPUT											INPUT											ALARMS								APPLICATION PROGRAMS									
	DIGITAL						ANALOG					DIGITAL					ANALOG						DIGITAL				ANALOG													
	CONTROL RELAY						POSITION ADJUSTMENT					AUXILIARY CONTACT					TEMPERATURE	% RELATIVE HUMIDITY	PSIG, PSIA, PSID	FLOW			CONTACT CLOSURE				HIGH LIMIT	LOW LIMIT	RUN TIME		SCHEDULED START/STOP	OPTIMUM START/STOP	DUTY CYCLING	DEMAND LIMITING	DAY/NIGHT SETBACK	ECONOMIZER	VENTILATION/RECIRCULATION					FAILURE MODE **
SUPPLY FAN	1											1											X						X		X	X	X	X								
SUPPLY FAN INLET VANES							1																																			
RETURN FAN	1											1											X						X		X	X	X	X								
RETURN FAN INLET VANES							1																																			
SUPPLY AIR																	1		1								X	X														
RETURN AIR																	1										X	X														
MIXED AIR																	1										X	X														
MINIMUM OUTSIDE AIR							1										1			1							X	X														
MIXED AIR DAMPERS							1																													X	X					
COOLING COIL VALVE							1																																			
FILTER												2											X																			
FREEZESTAT												1											X																			
SMOKE DETECTOR												2											X																			
SUPPLY AIR HIGH STATIC												1											X																			
SPACE TEMP (NIGHT LOW LIMIT)																	X										X	X						X								

** C - LAST COMMAND
H - HIGH VALUE
L - LOW VALUE

O - ON (OPEN)
F - OFF (CLOSED)

DDC DATA TERMINAL STRIP LAYOUT

	DEVICE NO.	DESCRIPTION	TYPE
1	TT-XX-01	MIXED AIR TEMPERATURE	AI
2	TT-XX-02	OUTSIDE AIR TEMPERATURE	AI
3	TT-XX-03	RETURN AIR TEMPERATURE	AI
4	TT-XX-04	SUPPLY AIR TEMPERATURE	AI
5	TT-XX-05	SPACE TEMP (NITE LOW LIMIT)	AI
6			
7	DPT-XX-01	SUPPLY AIR STATIC PRESSURE	AI
8	FT-XX-01	SUPPLY AIR FLOW	AI
9	FT-XX-02	RETURN AIR FLOW	AI
10	FT-XX-03	MINIMUM OUTSIDE AIR FLOW	AI
11	DPS-XX-01	FILTER ALARM	DI
12	DPS-XX-03	PRE-FILTER ALARM	DI
13	IP-XX-01	MIXED AIR DAMPERS	AO
14	IP-XX-02	COOLING COIL VALVE	AO
15	IP-XX-03	SUPPLY FAN INLET VANES	AO
16	IP-XX-04	RETURN FAN INLET VANES	AO
17	IP-XX-05	MINIMUM OUTSIDE AIR DAMPER	AO
18	TSL-XX-01	FREEZESTAT	DI
19	DPS-XX-02	SUPPLY AIR HIGH STATIC	DI
20	SMK-XX-01	SUPPLY AIR SMOKE DETECTOR	DI
21	SMK-XX-02	RETURN AIR SMOKE DETECTOR	DI
22			
23	C-XX-05	SUPPLY FAN START/STOP	DO
24			
25	C-XX-06	SUPPLY FAN STATUS	DI
26	C-XX-07	RETURN FAN STATUS	DI
27			
28			
29			
30			

Figure 4-18j. DDC control system I/O table and data terminal strip layout for VAV HVAC system with return fan.