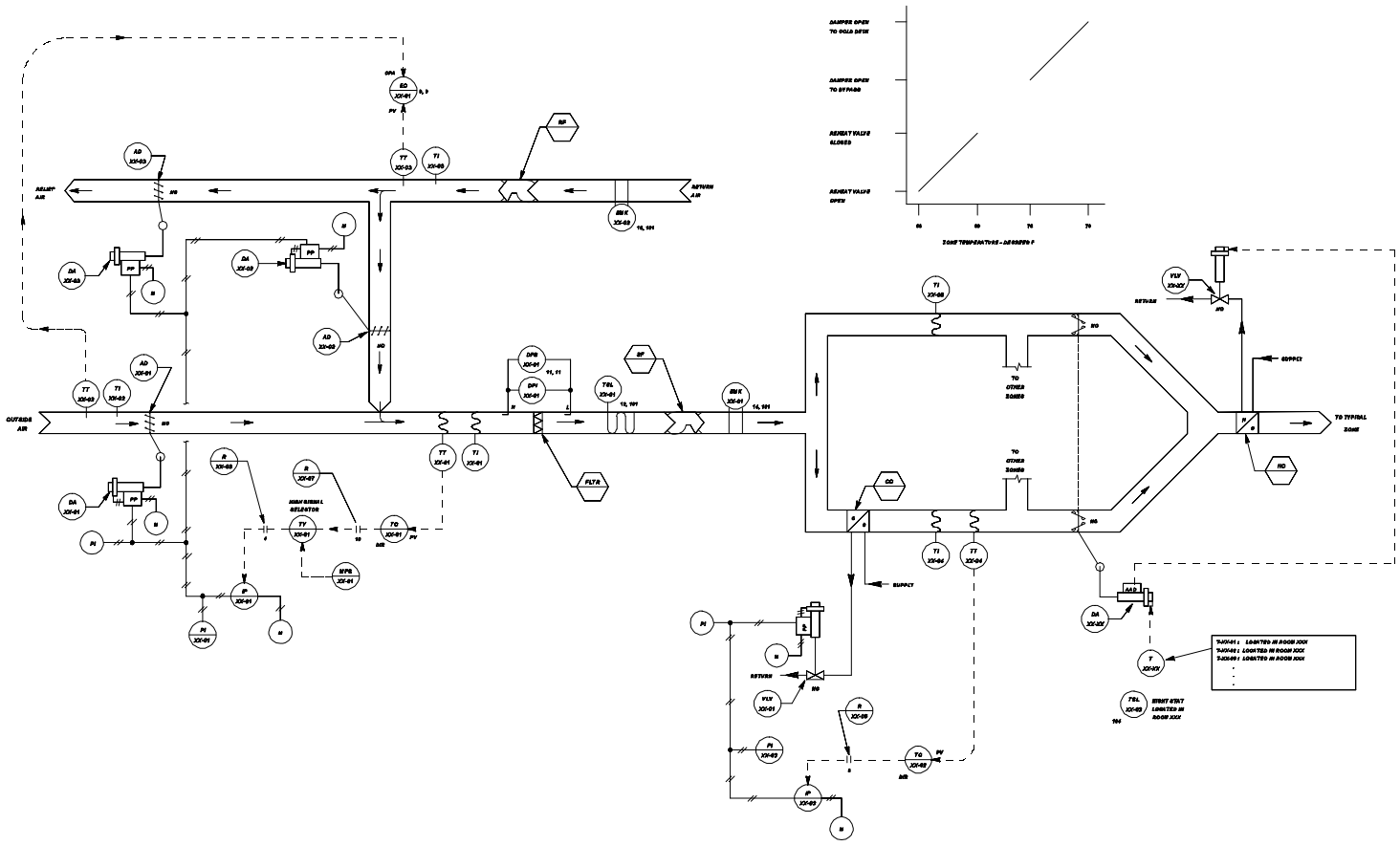

Figure 4-16a. Control system schematic for bypass multizone HVAC system.

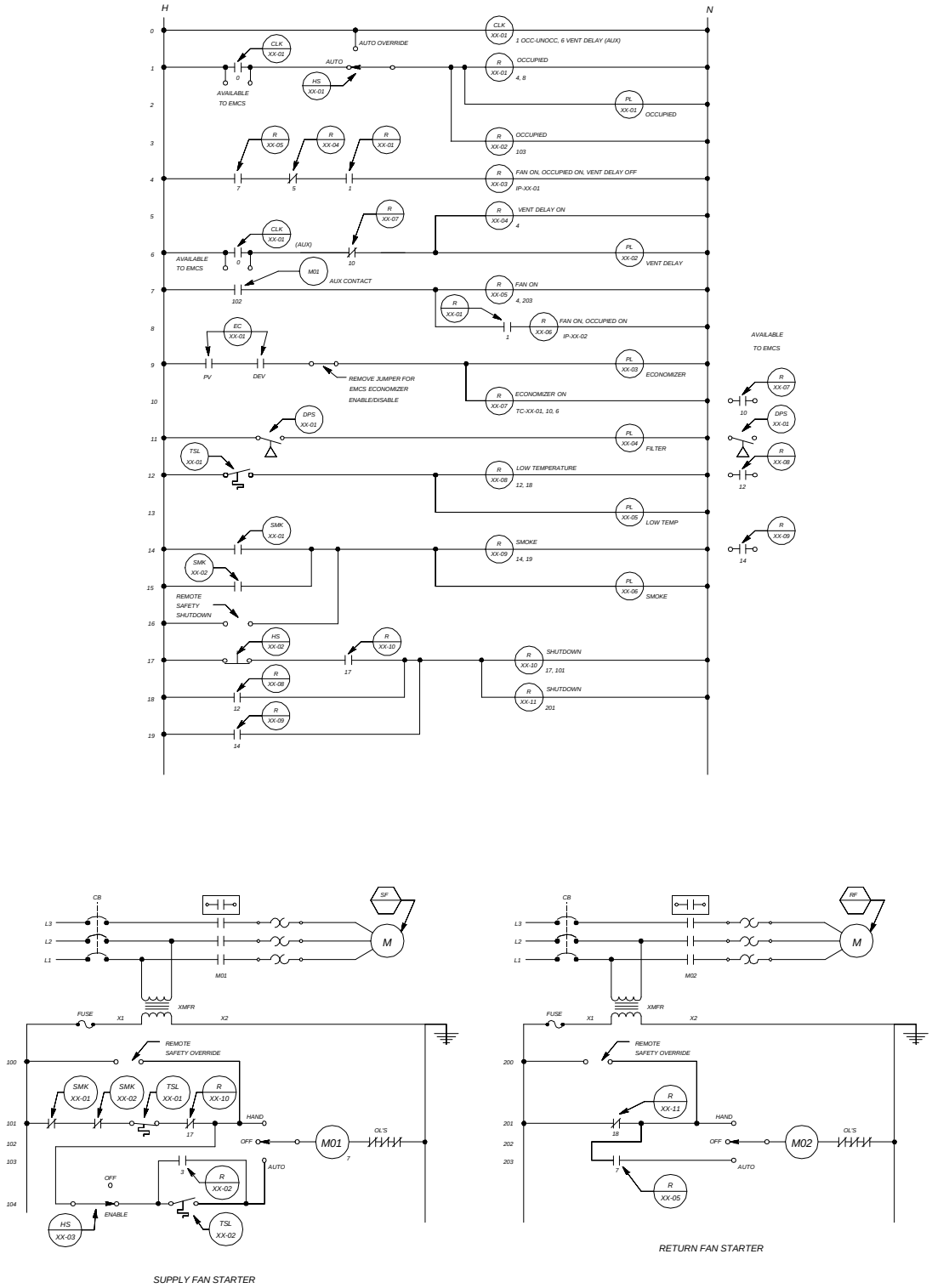

Figure 4-16b. Control system ladder diagram for bypass multizone HVAC system.

LOOP CONTROL FUNCTION	DEVICE NUMBER	DEVICE FUNCTION	SETPOINT	RANGE	ADDITIONAL PARAMETERS
MIXED AIR TEMPERATURE	DA-XX-01 DA-XX-02 DA-XX-03	DAMPER ACTUATOR	_____	21-103 kPa (3 - 15 PSIG)	_____
	MPS-XX-01	MINIMUM POSITION SWITCH	_____	_____	SET MIN OA L/s (CFM) EQUAL TO ___ L/s (___ CFM)
	TC-XX-01	MIXED AIR TEMPERATURE CONTROLLER	13 DEG C (55 DEG F)	4 TO 60 DEG C (40 TO 140 DEG F)	_____
	TT-XX-01	MIXED AIR TEMPERATURE TRANSMITTER	_____	4 TO 60 DEG C (40 TO 140 DEG F)	_____
	TT-XX-02	OUTSIDE AIR TEMPERATURE TRANSMITTER	_____	-34 TO 54 DEG C (-30 TO +130 DEG F)	_____
	TT-XX-03	RETURN AIR TEMPERATURE TRANSMITTER	_____	-34 TO 54 DEG C (-30 TO +130 DEG F)	_____
	EC-XX-01	ECONOMIZER CONTROLLER	PV CONTACT CLOSE AT __ DEG C (__ DEG F) OPEN AT __ DEG C (__ DEG F)	-34 TO 54 DEG C (-30 TO +130 DEG F)	DEV CONTACT CLOSE @ DELTA T= __ DEG C (__ DEG F) OPEN @ DELTA T= __ DEG C (__ DEG F)
	TSL-XX-01	FREEZESTAT	2 DEG C (35 DEG F)	3 DEG C DIFFERENTIAL (5 DEG F DIFFERENTIAL)	_____
	DPS-XX-01	FILTER ALARM	PER FILTER MANUFACTURER'S RECOMMENDATION	PER FILTER MANUFACTURER'S RECOMMENDATION	_____
SPACE LOW TEMPERATURE	TSL-XX-02	NIGHT STAT - SPACE LOW TEMPERATURE PROTECTION	13 DEG C (55 DEG F)	3 DEG C DIFFERENTIAL (5 DEG F DIFFERENTIAL)	_____
COLD DECK AIR TEMPERATURE	VLV-XX-01	COOLING COIL VALVE	_____	21-103 kPa (3 - 15 PSIG)	Kv = __ (Cv = __) CLOSE AGAINST __ kPa (__ PSIG)
	TC-XX-02	COLD DECK TEMPERATURE CONTROLLER	14 DEG C (57 DEG F)	4 TO 60 DEG C (40 TO 140 DEG F)	_____
	TT-XX-04	COLD DECK TEMPERATURE TRANSMITTER	_____	4 TO 60 DEG C (40 TO 140 DEG F)	_____
OCCUPIED MODE	CLK-XX-01 CONTACT	365 DAY SCHEDULE	_____	NORMAL SCHEDULE (M-F) CONTACT CLOSED: 0705 HRS CONTACT OPEN: 1700 HRS	CONTACT OPEN: SAT, SUN
VENTILATION DELAY MODE	CLK-XX-01 CONTACT	365 DAY SCHEDULE	_____	NORMAL SCHEDULE (M-F) CONTACT CLOSED: 0700 HRS CONTACT OPEN: 0800 HRS	
SPACE AA	VLV-XX-AA	ZONE HEATING COIL VALVE	_____	0 TO 40 % OF THERMOSTAT OUTPUT	Kv = __ (Cv = __) CLOSE AGAINST __ kPa (__ PSIG)
	DA-XX-AA	ZONE DAMPER ACTUATOR	_____	60 TO 100 % OF THERMOSTAT OUTPUT	_____
	T-XX-AA	ZONE THERMOSTAT	20 DEG C (68 DEG F) - HEATING 23 DEG C (74 DEG F) - COOLING	_____	_____
SPACE BB					

NOTE: OTHER CONTROL DEVICES SUCH AS I/Ps, RELAYS, AND SIGNAL SELECTERS ARE NOT SHOWN.

Figure 4-16c. Control system equipment for bypass multizone HVAC system.

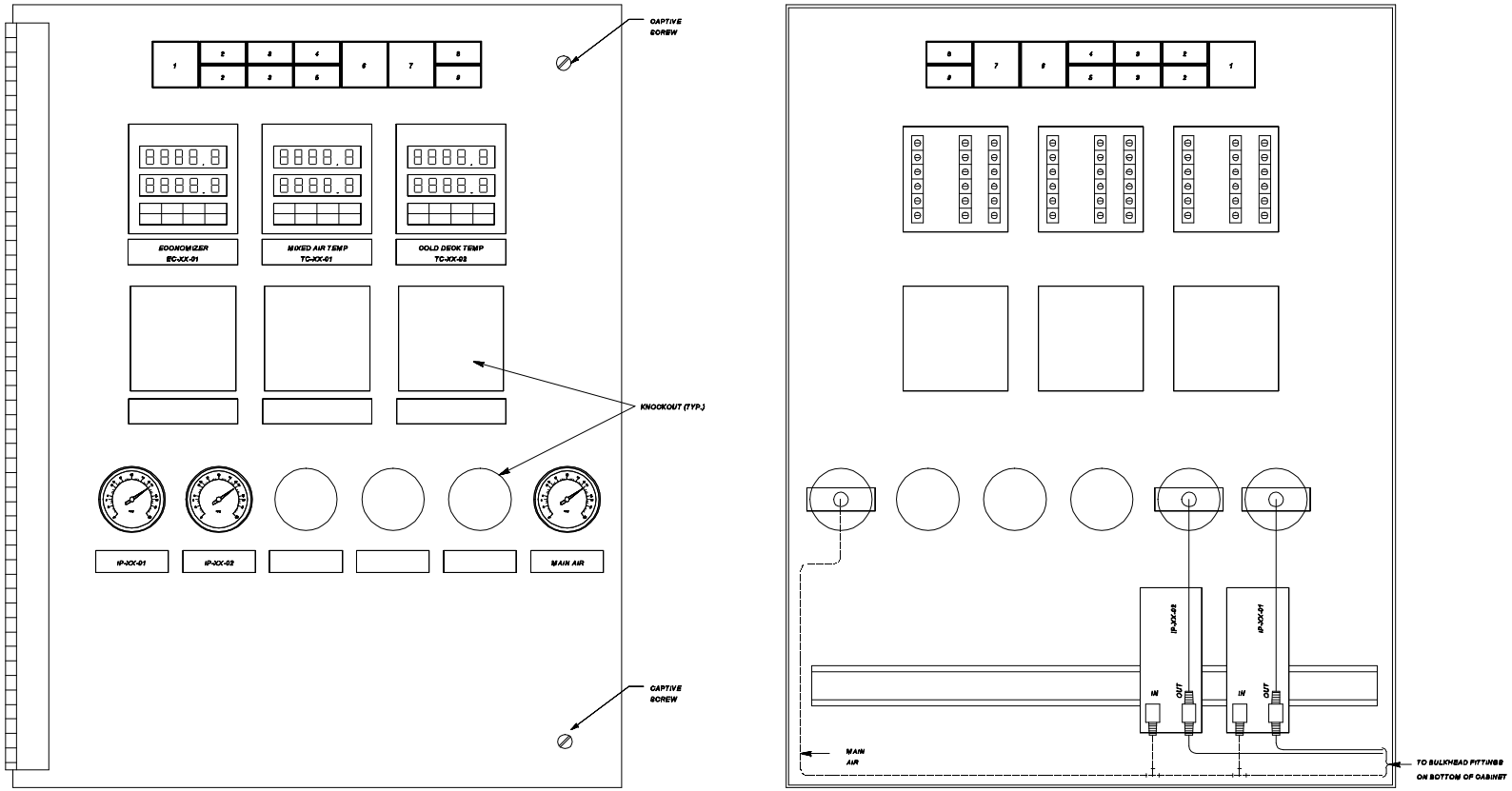

FRONT VIEW

REAR VIEW

SWITCH AND PILOT LIGHT LEGEND

POSITION LEGEND	DEVICE TYPE	IDENTIFIER	POSITION LEGEND	DEVICE TYPE	IDENTIFIER
1 - RESET	NON-ILLUMINATED MOMENTARY CONTACT PUSH BUTTON SWITCH	HS-XX-02	6 - FILTER	PILOT LIGHT	PL-XX-04
2 - AUTO/AUTO OVERRIDE	ILLUMINATED MAINTAINED CONTACT INTERLOCKED SWITCHES	HS-XX-01	7 - OCC	PILOT LIGHT	PL-XX-01
3 - ENABLE/OFF	ILLUMINATED MAINTAINED CONTACT INTERLOCKED SWITCHES	HS-XX-03	8 - VENT DELAY	PILOT LIGHT	PL-XX-02
4 - LOW TEMP	PILOT LIGHT	PL-XX-05	9 - ECONOMIZER	PILOT LIGHT	PL-XX-03
5 - SMOKE	PILOT LIGHT	PL-XX-06			

Figure 4-16d. Control panel interior door layout for bypass multizone HVAC system.

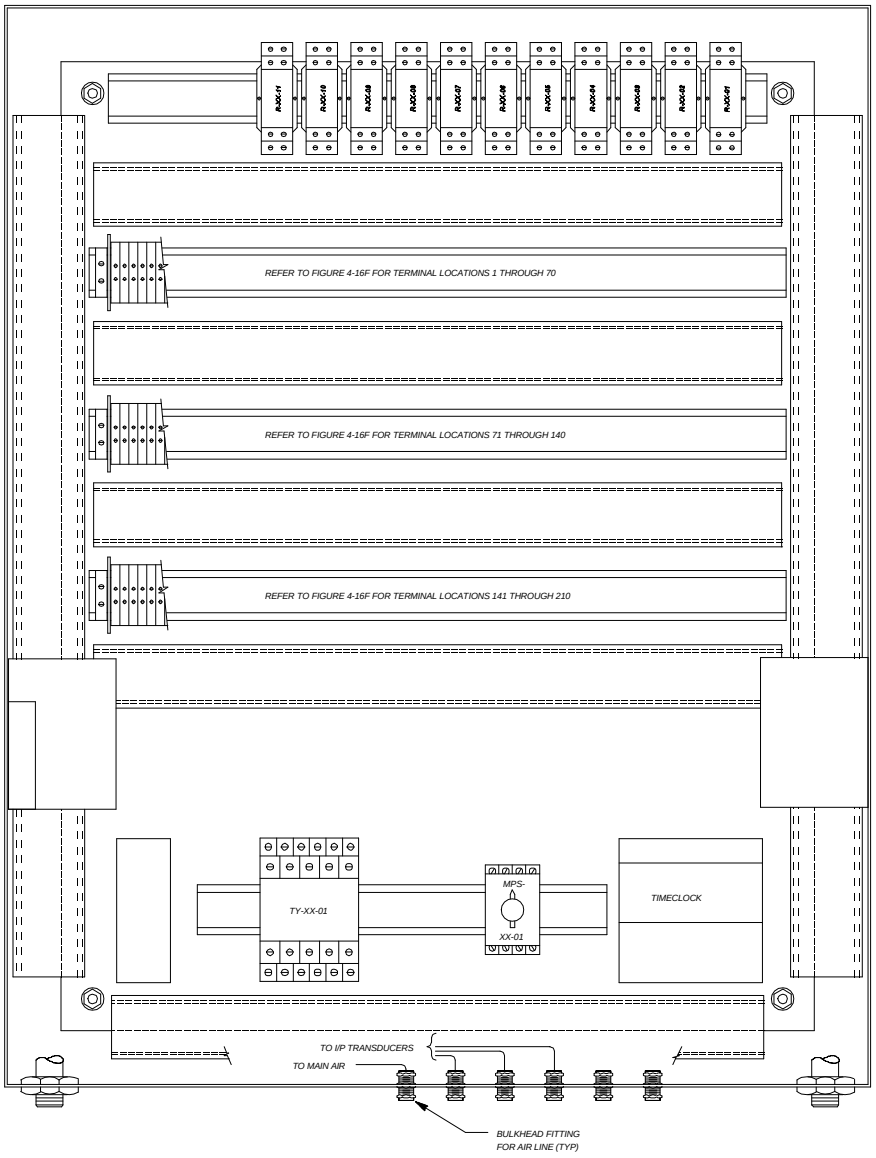

Figure 4-16e. Control panel back panel layout for bypass multizone HVAC system.

1-10	11-20	21-30	31-40	41-50	51-60	61-70
EC-XX-01 ECONOMIZER CONTROLLER TERMINAL BLOCKS	TC-XX-01 MIXED AIR TEMP CONTROLLER TERMINAL BLOCKS	TC-XX-02 COLD DECK TEMP CONTROLLER TERMINAL BLOCKS	RESERVED FOR CONTROLLER	RESERVED FOR CONTROLLER	RESERVED FOR CONTROLLER	RESERVED FOR CONTROLLER

71-80	81-84	85-86	87-90	91-94	95-96	97-100	101-104	105-110	111 - 120	121-124	125-130	131-132	133-140
RESERVED FOR CONTROLLER	CLK-XX-01 EMCS REPLACE-MENT	SPACE	REMOTE START CONTACTS	TSL-XX-01 AND EMCS CONTACTS	SPACE	SMK-XX-01 SMK-XX-02 AND EMCS CONTACTS	DPS-XX-01 AND EMCS CONTACTS	SPACE	SPACE	EMCS ECONO-MIZER OVERRIDE	SPACE	TSL-XX-02	SPACE

141-170	171-180	181-190	191-200	201-210
120 V AC POWER DISTRIBUTION TERMINAL BLOCKS	24 V DC POWER DISTRIBUTION TERMINAL BLOCKS	SF-XX-01 STARTER CONTROL WIRING TERMINAL BLOCKS	RF-XX-01 STARTER CONTROL WIRING TERMINAL BLOCKS	SPACE

Figure 4-16f. Control panel terminal block layout for bypass multizone HVAC system.

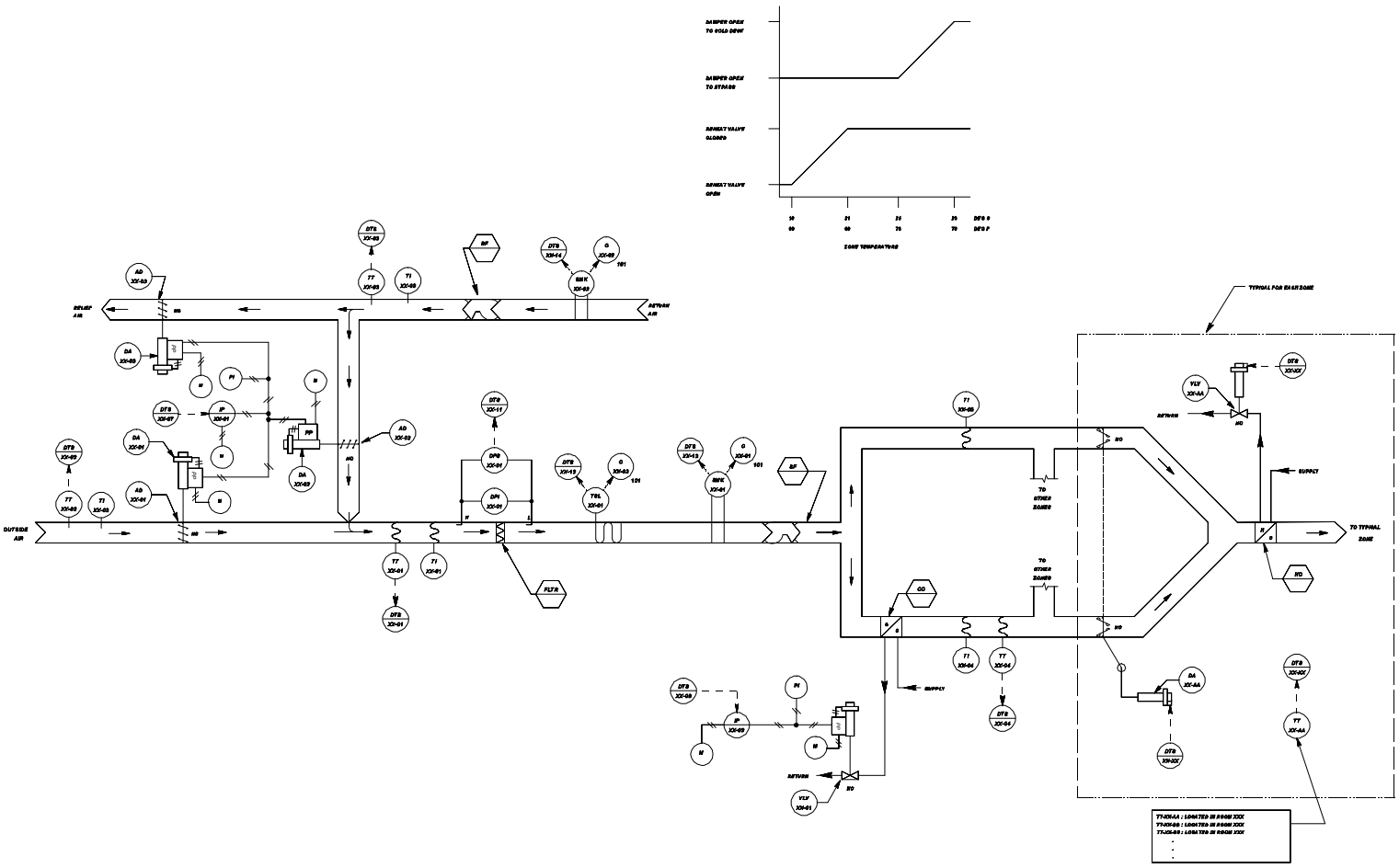

Figure 4-16g. DDC control system schematic for bypass multizone HVAC system.

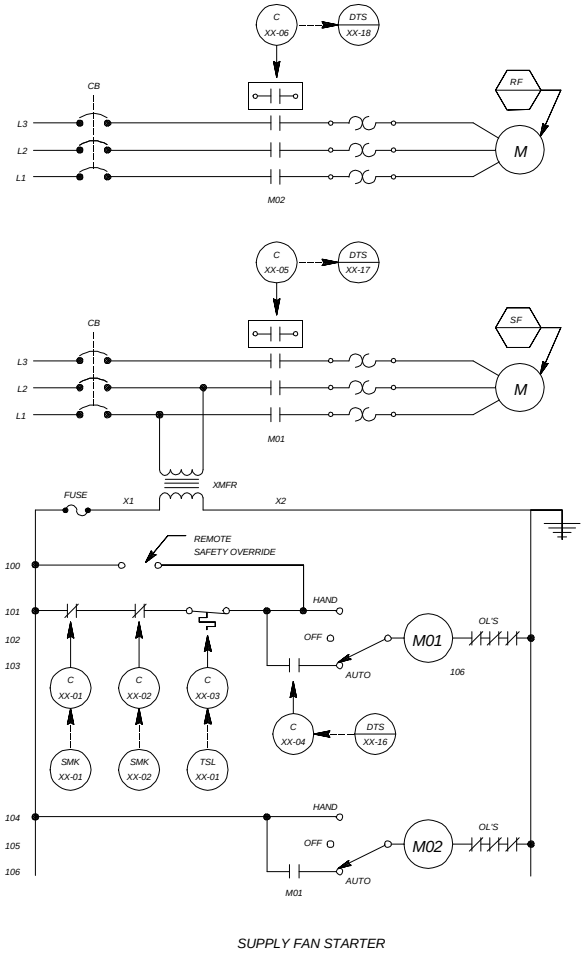

SUPPLY FAN STARTER

Figure 4-16h. DDC control system ladder diagram for bypass multizone HVAC system.

SENSOR SCHEDULE

IDENTIFIER	FUNCTION	RANGE
TT-XX-01	MIXED AIR TEMPERATURE TRANSMITTER	4 TO 60 DEG C (40 TO 140 DEG F)
TT-XX-02	OUTSIDE AIR TEMPERATURE TRANSMITTER	-34 TO 54 DEG C (-30 TO +130 DEG F)
TT-XX-03	RETURN AIR TEMPERATURE TRANSMITTER	4 TO 60 DEG C (40 TO 140 DEG F)
TT-XX-04	COLD DECK TEMPERATURE TRANSMITTER	4 TO 60 DEG C (40 TO 140 DEG F)
TT-XX-AA	SPACE TEMPERATURE TRANSMITTER	10 TO 30 DEG C (50 TO 85 DEG F)

CONTROL VALVE SCHEDULE

IDENTIFIER	FUNCTION	TYPE	RANGE	Cv (Kv)	CLOSE-OFF RATING	REMARKS
VLV-XX-01	COOLING COIL VALVE	2-WAY, MODULATING	21 - 103 kPa (3-15 PSIG)	XX	XX kPa (XX PSIG)	
VLV-XX-02	ZONE HEATING COIL VALVE	2-WAY, MODULATING	———	XX	XX kPa (XX PSIG)	

CONTROL DAMPER SCHEDULE

IDENTIFIER	FUNCTION	TYPE	SIZE	RANGE	REMARKS
AD-XX-01	OUTSIDE AIR	MODULATING	W x H (mm) (WW" X HH")	21 - 103 kPa (3-15 PSIG)	DUCT SIZE, PARALLEL BLADE
AD-XX-02	RETURN AIR	MODULATING	W x H (mm) (WW" X HH")	↓	DUCT SIZE, PARALLEL BLADE
AD-XX-03	RELIEF AIR	MODULATING	W x H (mm) (WW" X HH")	↓	DUCT SIZE, PARALLEL BLADE
DA-XX-XX	ZONE DAMPER	MODULATING	———	———	

OPERATING PARAMETERS

FUNCTION	SETPOINT	REMARKS
MINIMUM OUTSIDE AIR	XXXX L/s (XXXX CFM)	
MIXED AIR TEMPERATURE	XX DEG C (XX DEG F)	
COLD DECK TEMPERATURE	XX DEG C (XX DEG F)	
SPACE TEMPERATURE	XX DEG C (XX DEG F) - HTG XX DEG C (XX DEG F) - CLG	
SPACE TEMP. (NIGHT SETBACK)	XX DEG C (XX DEG F)	(HEATING ONLY)
ECONOMIZER MODE		ECONOMIZER MODE = ON, WHEN CONDITION 1 AND CONDITION 2 ARE BOTH SATISFIED. CONDITION 1: RETURN AIR TEMP. > XX DEG C (XX DEG F) CONDITION 2: RETURN AIR TEMP. MINUS OUTSIDE AIR TEMP. > XX DEG C (XX DEG F)
OCCUPIED MODE		MONDAY - FRIDAY : 0705 HRS - 1700 HRS
VENT DELAY MODE		MONDAY - FRIDAY : 0700 HRS - 0800 HRS
FREEZESTAT	XX DEG C (XX DEG F)	
FILTER ALARM	XX kPa (XX IN. WATER)	

Figure 4-16i. DDC control system equipment for bypass multizone HVAC system.

	HARDWARE																							SOFTWARE																
	OUTPUT												INPUT											ALARMS								APPLICATION PROGRAMS										
	DIGITAL						ANALOG						DIGITAL						ANALOG					DIGITAL				ANALOG														
	CONTROL RELAY						POSITION ADJUSTMENT						AUXILIARY CONTACT						TEMPERATURE	% RELATIVE HUMIDITY	PSIG, PSIA, PSID	FLOW		CONTACT CLOSURE				HIGH LIMIT	LOW LIMIT	RUN TIME		SCHEDULED START/STOP	OPTIMUM START/STOP	DUTY CYCLING	DEMAND LIMITING	DAY/NIGHT SETBACK		ECONOMIZER	VENTILATION/RECIRCULATION	HOT/COLD DECK RESET					FAILURE MODE **
SUPPLY FAN	1												1											X						X		X	X	X	X										
RETURN FAN	1												1											X						X		X	X	X	X										
MIXED AIR																			1									X	X																
OUTSIDE AIR																			1									X	X																
RETURN AIR																			1									X	X																
COLD DECK																			1									X	X																
MIXED AIR DAMPERS							1																														X	X						
COOLING COIL VALVE							1																																					
FILTER													1											X																					
FREEZESTAT													1											X																					
SMOKE DETECTOR													2											X																					
SPACE TEMP																			X									X	X							X									
ZONE DAMPER							X																																						
ZONE HEATING VALVE							X																																						

** C - LAST COMMAND
H - HIGH VALUE
L - LOW VALUE

O - ON (OPEN)
F - OFF (CLOSED)

DATA TERMINAL STRIP LAYOUT

	DEVICE NO.	DESCRIPTION	TYPE
1	TT-XX-01	MIXED AIR TEMPERATURE	AI
2	TT-XX-02	OUTSIDE AIR TEMPERATURE	AI
3	TT-XX-03	RETURN AIR TEMPERATURE	AI
4	TT-XX-04	COLD DECK TEMPERATURE	AI
5			
6			
7	IP-XX-01	MIXED AIR DAMPERS	AO
8	IP-XX-02	COOLING COIL VALVE	AO
9			
10			
11	DPS-XX-01	FILTER ALARM	DI
12	TSL-XX-01	FREEZESTAT	DI
13	SMK-XX-01	SUPPLY AIR SMOKE DETECTOR	DI
14	SMK-XX-02	RETURN AIR SMOKE DETECTOR	DI
15			
16	C-XX-04	SUPPLY FAN START/STOP	DO
17	C-XX-05	SUPPLY FAN STATUS	DI
18	C-XX-06	RETURN FAN STATUS	DI
19			
20	TT-XX-AA	SPACE TEMP - ZONE AA	AI
21	DA-XX-AA	ZONE DAMPER - ZONE AA	AO
22	VLV-XX-AA	ZONE HTG. VALVE - ZONE AA	AO
23	TT-XX-BB	SPACE TEMP - ZONE BB	AI
24	DA-XX-BB	ZONE DAMPER - ZONE BB	AO
25	VLV-XX-BB	ZONE HTG. VALVE - ZONE BB	AO
26			
27			
28			
29			
30			

Figure 4-16j. DDC control system I/O table and data terminal strip layout for bypass multizone HVAC system.