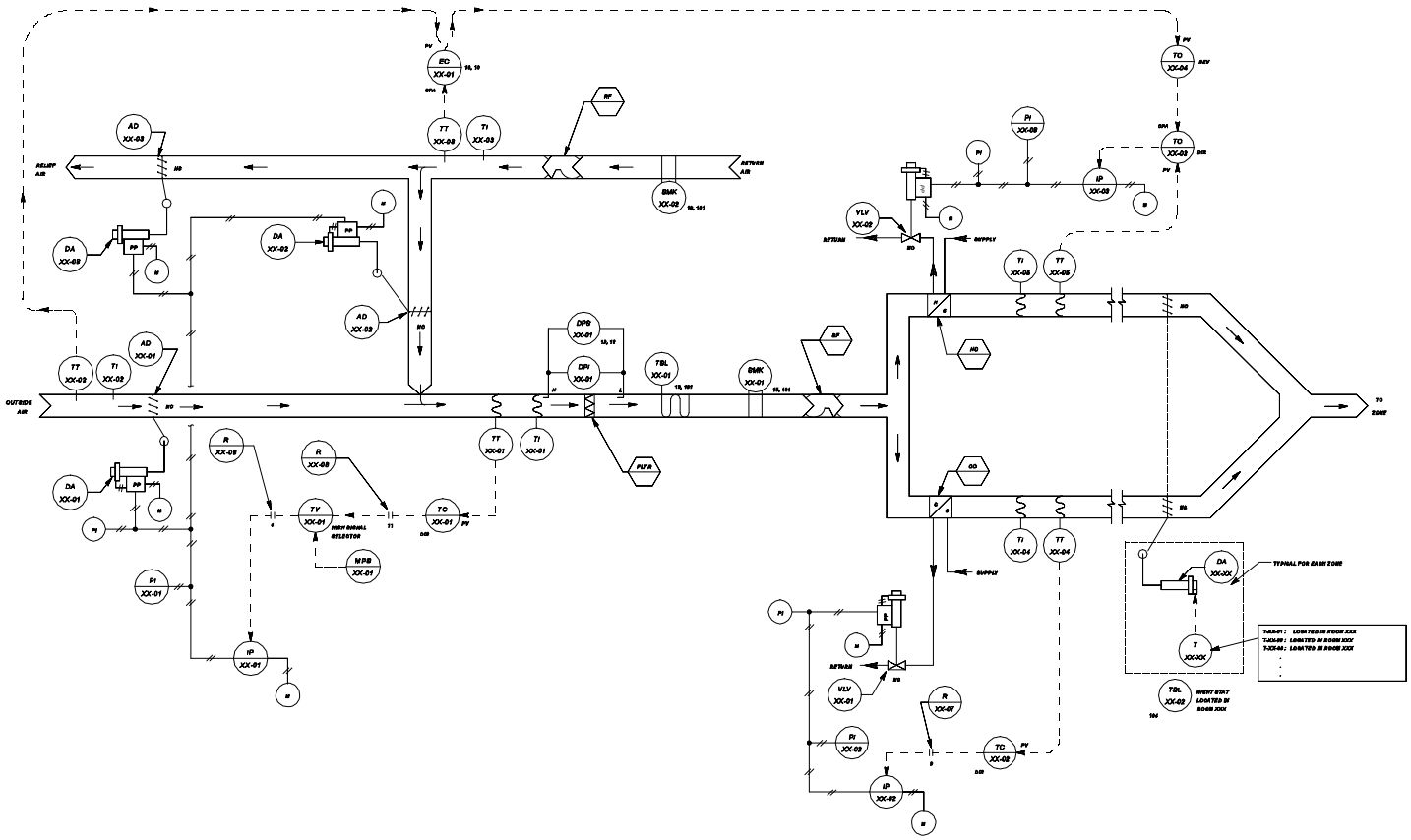

Figure 4-14a. Control system schematic for multizone HVAC system.

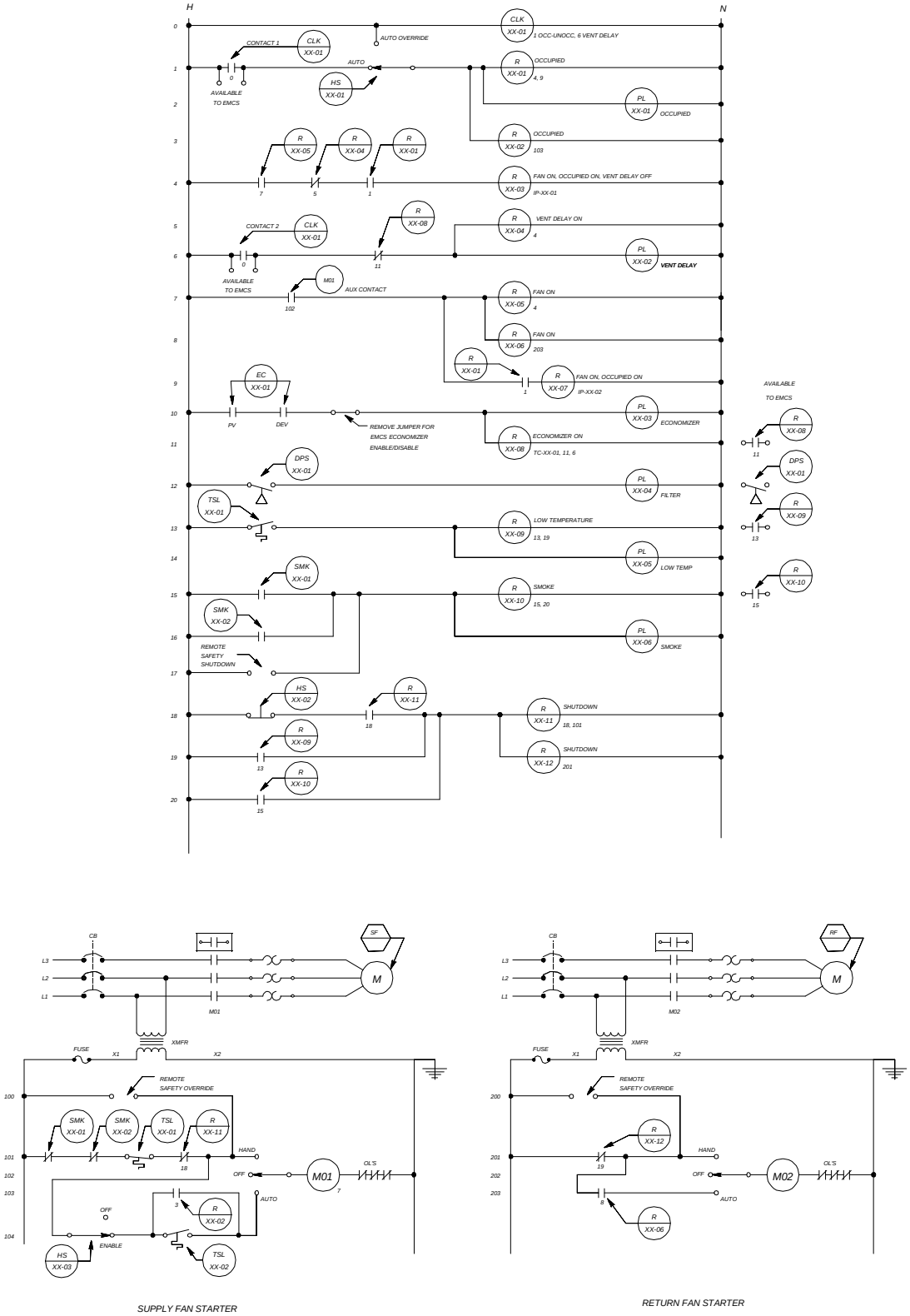

Figure 4-14b. Control system ladder diagram for multizone HVAC system.

LOOP CONTROL FUNCTION	DEVICE NUMBER	DEVICE FUNCTION	SETPOINT	RANGE	ADDITIONAL PARAMETERS
MIXED AIR TEMPERATURE	DA-XX-01 DA-XX-02 DA-XX-03	DAMPER ACTUATOR	_____	21-103 kPa (3 - 15 PSIG)	_____
	MPS-XX-01	MINIMUM POSITION SWITCH	_____	_____	SET MIN OA L/s (CFM) EQUAL TO ___ L/s (___ CFM)
	TC-XX-01	MIXED AIR TEMPERATURE CONTROLLER	13 DEG C (55 DEG F)	4 TO 60 DEG C (40 TO 140 DEG F)	_____
	TT-XX-01	MIXED AIR TEMPERATURE TRANSMITTER	_____	4 TO 60 DEG C (40 TO 140 DEG F)	_____
	TT-XX-02	OUTSIDE AIR TEMPERATURE TRANSMITTER	_____	-34 TO 54 DEG C (-30 TO +130 DEG F)	_____
	TT-XX-03	RETURN AIR TEMPERATURE TRANSMITTER	_____	-34 TO 54 DEG C (-30 TO +130 DEG F)	_____
	EC-XX-01	ECONOMIZER CONTROLLER	PV CONTACT CLOSE AT __ DEG C (__ DEG F) OPEN AT __ DEG C (__ DEG F)	-34 TO 54 DEG C (-30 TO +130 DEG F)	DEV CONTACT CLOSE @ DELTA T= __ DEG C (__ DEG F) OPEN @ DELTA T= __ DEG C (__ DEG F)
	TSL-XX-01	FREEZESTAT	2 DEG C (35 DEG F)	3 DEG C DIFFERENTIAL (5 DEG F DIFFERENTIAL)	_____
	DPS-XX-01	FILTER ALARM	PER FILTER MANUFACTURER'S RECOMMENDATION	PER FILTER MANUFACTURER'S RECOMMENDATION	_____
SPACE LOW TEMPERATURE	TSL-XX-02	NIGHT STAT - SPACE LOW TEMPERATURE PROTECTION	13 DEG C (55 DEG F)	3 DEG C DIFFERENTIAL (5 DEG F DIFFERENTIAL)	_____
COLD DECK AIR TEMPERATURE	VLV-XX-01	COOLING COIL VALVE	_____	21-103 kPa (3 - 15 PSIG)	Kv= __ (Cv= __) CLOSE AGAINST __ kPa (__ PSIG)
	TC-XX-02	COLD DECK TEMPERATURE CONTROLLER	14 DEG C (57 DEG F)	4 TO 60 DEG C (40 TO 140 DEG F)	_____
	TT-XX-04	COLD DECK TEMPERATURE TRANSMITTER	_____	4 TO 60 DEG C (40 TO 140 DEG F)	_____
HOT DECK AIR TEMPERATURE	VLV-XX-02	HEATING COIL VALVE	_____	21-103 kPa (3 - 15 PSIG)	Kv= __ (Cv= __) CLOSE AGAINST __ kPa (__ PSIG)
	TC-XX-03	HOT DECK TEMPERATURE CONTROLLER	OA TEMP = -18 DEG C (0 DEG F), HOT DECK = 49 DEG C (120 DEG F) OA TEMP = 16 DEG C (60 DEG F), HOT DECK = 32 DEG C (90 DEG F)	PV = 4 TO 60 DEG C (40 TO 140 DEG F) CPA = 32 TO 49 DEG C (90 TO 120 DEG F)	CPA LO-LIMIT = 32 DEG C (90 DEG F) CPA HI-LIMIT = 49 DEG C (120 DEG F)
	TC-XX-04	OUTSIDE AIR TEMPERATURE CONTROLLER	SET POINT = -1 DEG C (30 DEG F) PROPORTIONAL BAND = 37.5 % MANUAL RESET = 50 %	-34 TO 54 DEG C (-30 TO +130 DEG F)	_____
	TT-XX-05	HOT DECK TEMPERATURE TRANSMITTER	_____	4 TO 60 DEG C (40 TO 140 DEG F)	_____
OCCUPIED MODE	CLK-XX-01 CONTACT	365 DAY SCHEDULE	_____	NORMAL SCHEDULE (M-F) CONTACT CLOSED: 0700 HRS CONTACT OPEN: 1700 HRS	CONTACT OPEN: SAT, SUN
VENTILATION DELAY MODE	CLK-XX-01 CONTACT	365 DAY SCHEDULE	_____	NORMAL SCHEDULE (M-F) CONTACT CLOSED: 0700 HRS CONTACT OPEN: 0800 HRS	

NOTE: OTHER CONTROL DEVICES SUCH AS I/Ps, RELAYS, AND SIGNAL SELECTERS ARE NOT SHOWN.

Figure 4-14c. Control system equipment for multizone HVAC system.

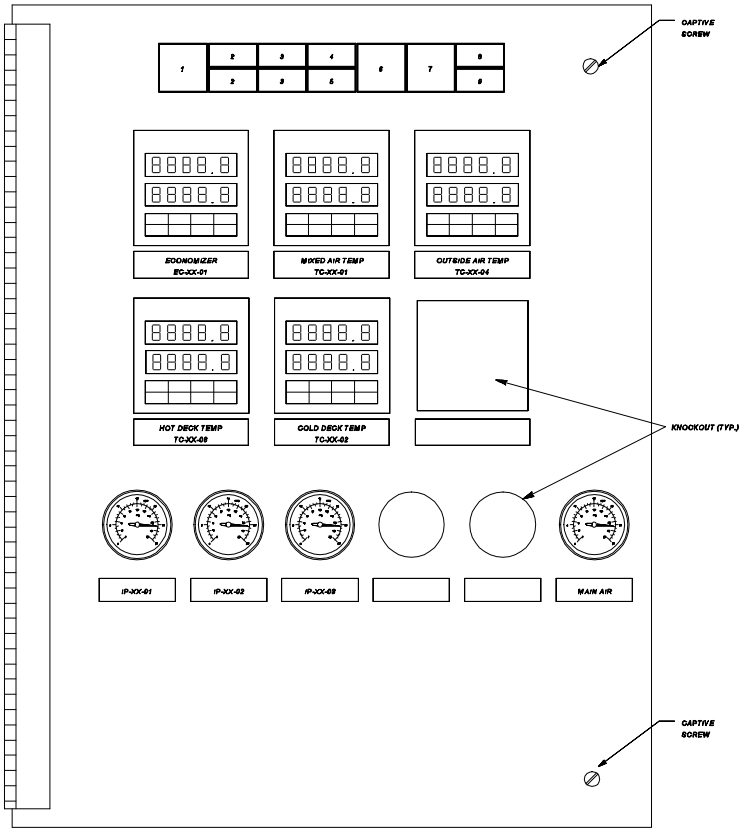

FRONT VIEW

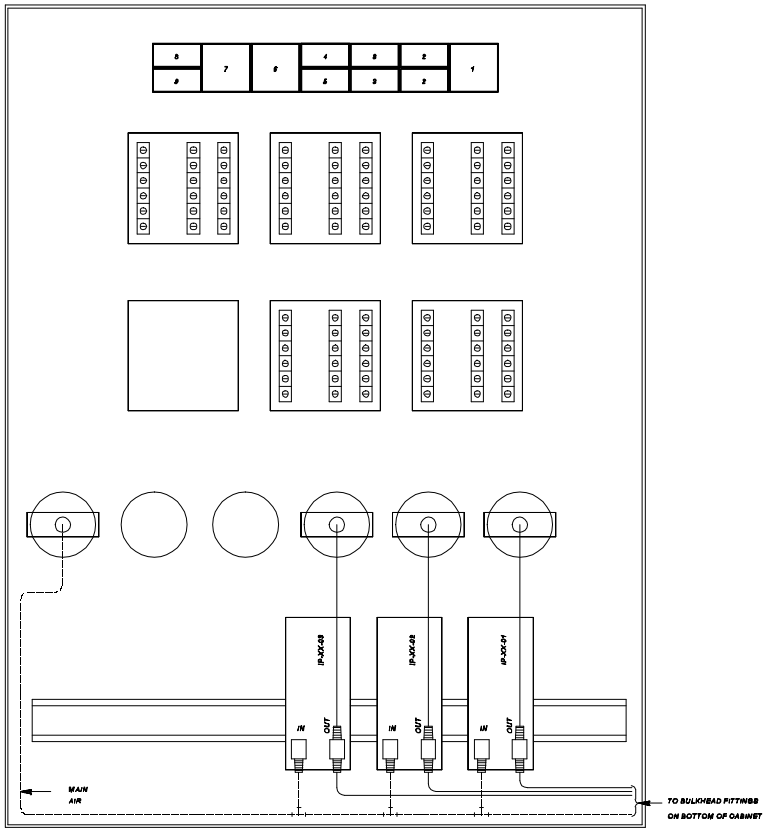

REAR VIEW

SWITCH AND PILOT LIGHT LEGEND

POSITION LEGEND	DEVICE TYPE	IDENTIFIER	POSITION LEGEND	DEVICE TYPE	IDENTIFIER
1 - RESET	NON-ILLUMINATED MOMENTARY CONTACT PUSH BUTTON SWITCH	HS-XX-02	6 - FILTER	PILOT LIGHT	PL-XX-04
2 - AUTO/AUTO OVERRIDE	ILLUMINATED MAINTAINED CONTACT INTERLOCKED SWITCHES	HS-XX-01	7 - OCC	PILOT LIGHT	PL-XX-01
3 - ENABLE/OFF	ILLUMINATED MAINTAINED CONTACT INTERLOCKED SWITCHES	HS-XX-03	8 - VENT DELAY	PILOT LIGHT	PL-XX-02
4 - LOW TEMP	PILOT LIGHT	PL-XX-05	9 - ECONOMIZER	PILOT LIGHT	PL-XX-03
5 - SMOKE	PILOT LIGHT	PL-XX-06			

Figure 4-14d. Control panel interior door layout for multizone HVAC system.

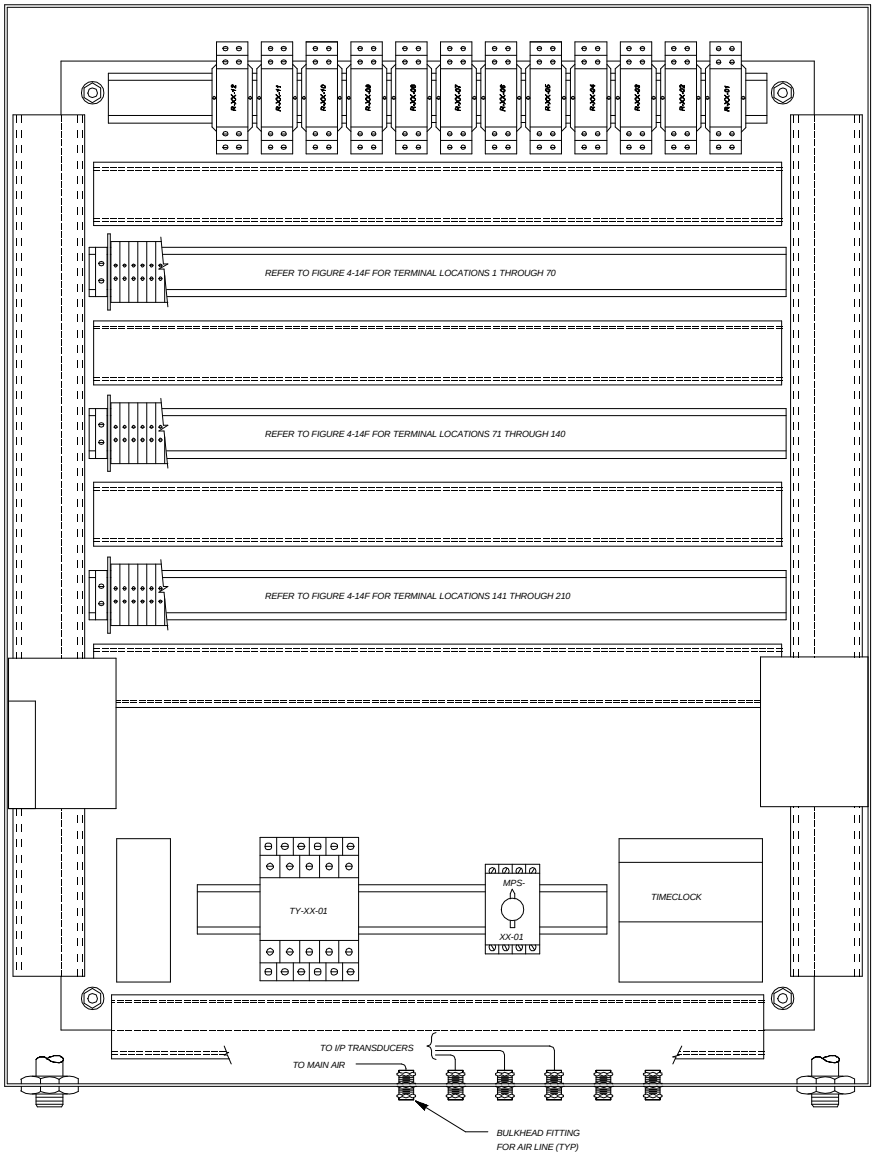

Figure 4-14e. Control panel back panel layout for multizone HVAC system.

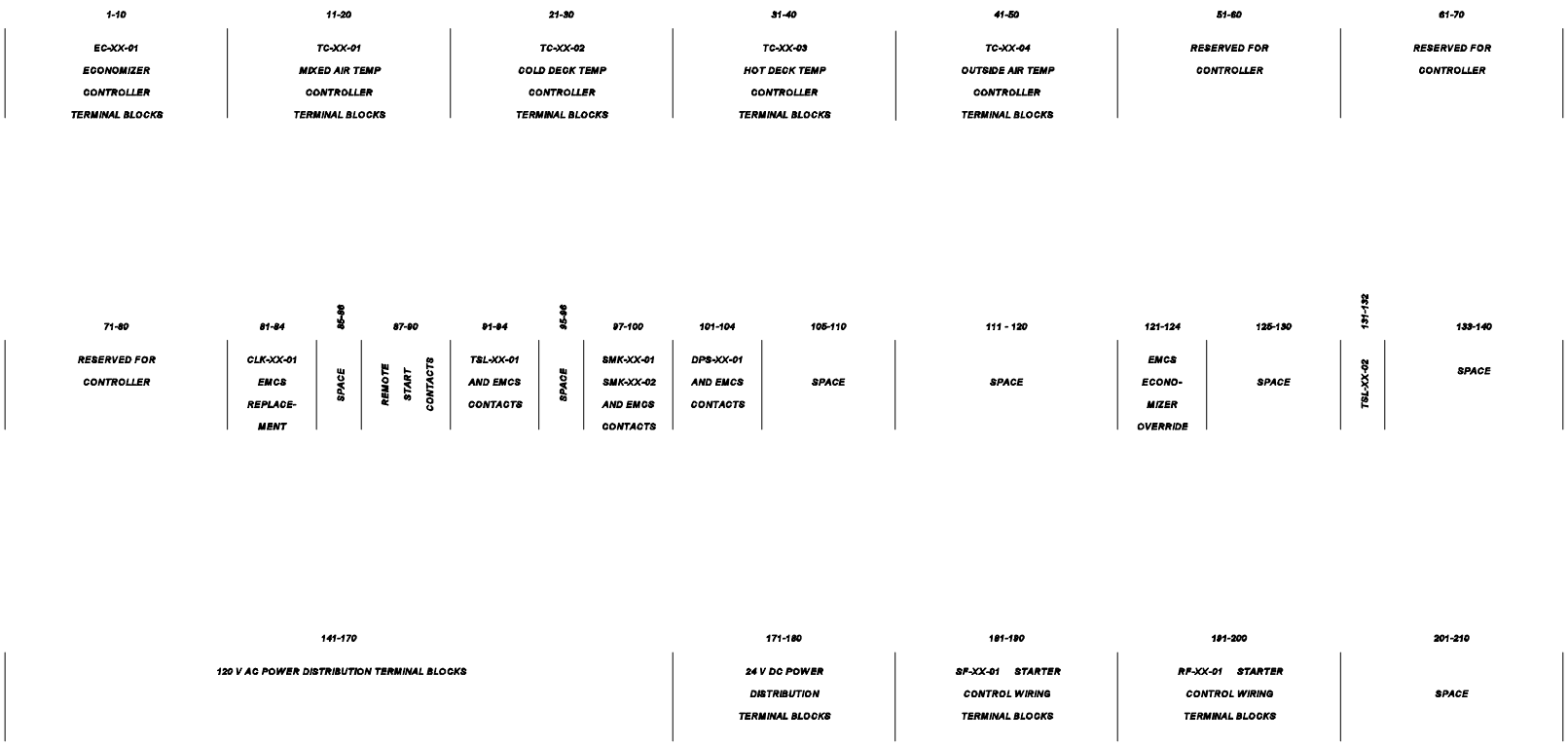

Figure 4-14f. Control panel terminal block layout for multizone HVAC system.

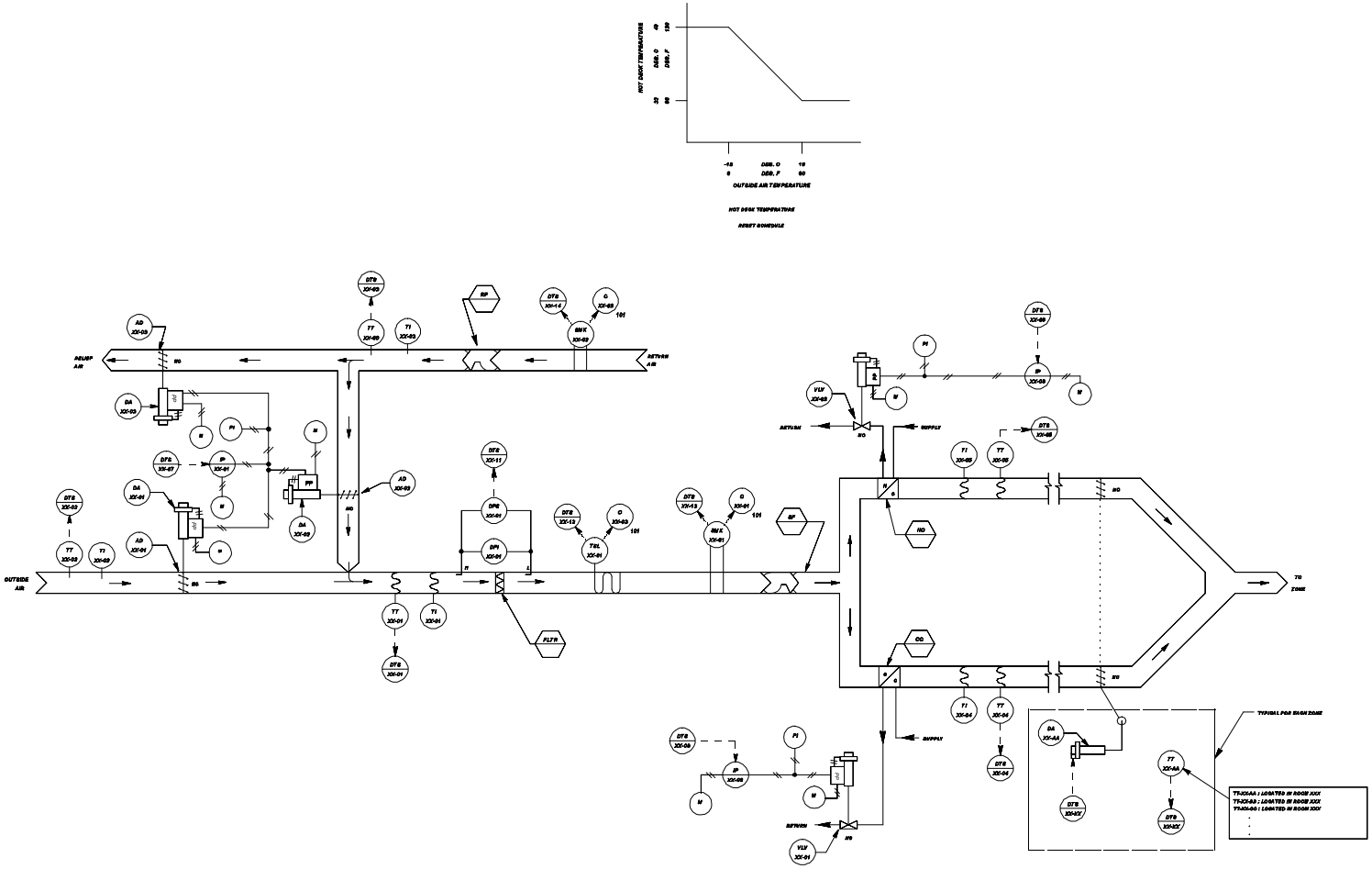

Figure 4-14g. DDC control system schematic for multizone HVAC system.

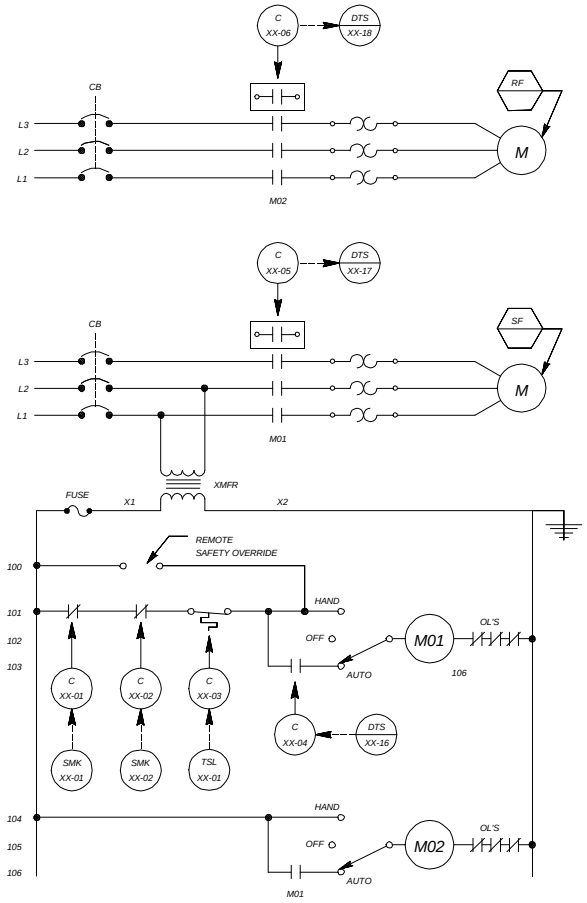

SUPPLY FAN STARTER

Figure 4-14h. DDC control system ladder diagram for multizone HVAC system.

SENSOR SCHEDULE

IDENTIFIER	FUNCTION	RANGE
TT-XX-01	MIXED AIR TEMPERATURE TRANSMITTER	4 TO 60 DEG C (40 TO 140 DEG F)
TT-XX-02	OUTSIDE AIR TEMPERATURE TRANSMITTER	-34 TO 54 DEG C (-30 TO +130 DEG F)
TT-XX-03	RETURN AIR TEMPERATURE TRANSMITTER	4 TO 60 DEG C (40 TO 140 DEG F)
TT-XX-04	COLD DECK TEMPERATURE TRANSMITTER	4 TO 60 DEG C (40 TO 140 DEG F)
TT-XX-05	HOT DECK TEMPERATURE TRANSMITTER	4 TO 60 DEG C (40 TO 140 DEG F)
TT-XX-AA	SPACE TEMPERATURE TRANSMITTER	10 TO 30 DEG C (50 TO 85 DEG F)

CONTROL VALVE SCHEDULE

IDENTIFIER	FUNCTION	TYPE	RANGE	Cv (Kv)	CLOSE-OFF RATING	REMARKS
VLV-XX-01	COOLING COIL VALVE	2-WAY, MODULATING	21 - 103 kPa (3-15 PSIG)	XX	XX kPa (XX PSIG)	
VLV-XX-02	HEATING COIL VALVE	2-WAY, MODULATING	21 - 103 kPa (3-15 PSIG)	XX	XX kPa (XX PSIG)	

CONTROL DAMPER SCHEDULE

IDENTIFIER	FUNCTION	TYPE	SIZE	RANGE	REMARKS
AD-XX-01	OUTSIDE AIR	MODULATING	W x H (mm) (WW" X HH")	21 - 103 kPa (3-15 PSIG)	DUCT SIZE, PARALLEL BLADE
AD-XX-02	RETURN AIR	MODULATING	W x H (mm) (WW" X HH")	↓	DUCT SIZE, PARALLEL BLADE
AD-XX-03	RELIEF AIR	MODULATING	W x H (mm) (WW" X HH")	↓	DUCT SIZE, PARALLEL BLADE
DA-XX-XX	ZONE DAMPER	MODULATING	———	———	

OPERATING PARAMETERS

FUNCTION	SETPOINT	REMARKS
MINIMUM OUTSIDE AIR	XXXX L/s (XXXX CFM)	
MIXED AIR TEMPERATURE	XX DEG C (XX DEG F)	
COLD DECK TEMPERATURE	XX DEG C (XX DEG F)	
HOT DECK TEMPERATURE		RESET SCHEDULE: OA TEMP = XX DEG C (XX DEG F): HOT DECK SETPOINT = XX DEG C (XX DEG F) OA TEMP = XX DEG C (XX DEG F): HOT DECK SETPOINT = XX DEG C (XX DEG F)
SPACE TEMP. (NIGHT SETBACK)	XX DEG C (XX DEG F)	(HEATING ONLY)
ECONOMIZER MODE		ECONOMIZER MODE = ON, WHEN CONDITION 1 AND CONDITION 2 ARE BOTH SATISFIED. CONDITION 1: RETURN AIR TEMP. > XX DEG C (XX DEG F) CONDITION 2: RETURN AIR TEMP. MINUS OUTSIDE AIR TEMP. > XX DEG C (XX DEG F)
OCCUPIED MODE		MONDAY - FRIDAY : 0705 HRS - 1700 HRS
VENT DELAY MODE		MONDAY - FRIDAY : 0700 HRS - 0800 HRS
FREEZESTAT	XX DEG C (XX DEG F)	
FILTER ALARM	XX kPa (XX IN. WATER)	

Figure 4-14i. DDC control system equipment for multizone HVAC system.

	HARDWARE																									SOFTWARE															
	OUTPUT														INPUT											ALARMS											APPLICATION PROGRAMS											
	DIGITAL						ANALOG								DIGITAL						ANALOG					DIGITAL					ANALOG																
	CONTROL RELAY						POSITION ADJUSTMENT								AUXILARY CONTACT						TEMPERATURE	% RELATIVE HUMIDITY	PSIG, PSIA, PSID	FLOW		CONTACT CLOSURE					HIGH LIMIT	LOW LIMIT	RUN TIME		SCHEDULED START/STOP	OPTIMUM START/STOP	DUTY CYCLING	DEMAND LIMITING	DAY/NIGHT SETBACK	ECONOMIZER	VENTILATION/RECIRCULATION	HOT/COLD DECK RESET					FAILURE MODE **
SUPPLY FAN	1														1											X							X		X	X	X	X									
RETURN FAN	1														1											X							X		X	X	X	X									
MIXED AIR																					1										X	X																
OUTSIDE AIR																					1										X	X																
RETURN AIR																					1										X	X																
COLD DECK																					1										X	X																
HOT DECK																					1										X	X										X						
MIXED AIR DAMPERS							1																																	X	X							
COOLING COIL VALVE							1																																									
HEATING COIL VALVE							1																																									
FILTER															1											X																						
FREEZESTAT															1											X																						
SMOKE DETECTOR															2											X																						
SPACE TEMP																					X										X	X							X									
ZONE DAMPER							X																																									

** C - LAST COMMAND
H - HIGH VALUE
L - LOW VALUE

O - ON (OPEN)
F - OFF (CLOSED)

DATA TERMINAL STRIP LAYOUT

		DEVICE NO.	DESCRIPTION	TYPE
1		TT-XX-01	MIXED AIR TEMPERATURE	AI
2		TT-XX-02	OUTSIDE AIR TEMPERATURE	AI
3		TT-XX-03	RETURN AIR TEMPERATURE	AI
4		TT-XX-04	COLD DECK TEMPERATURE	AI
5		TT-XX-05	HOT DECK TEMPERATURE	AI
6				
7		IP-XX-01	MIXED AIR DAMPERS	AO
8		IP-XX-02	COOLING COIL VALVE	AO
9		IP-XX-03	HEATING COIL VALVE	AO
10				
11		DPS-XX-01	FILTER ALARM	DI
12		TSL-XX-01	FREEZESTAT	DI
13		SMK-XX-01	SUPPLY AIR SMOKE DETECTOR	DI
14		SMK-XX-02	RETURN AIR SMOKE DETECTOR	DI
15				
16		C-XX-04	SUPPLY FAN START/STOP	DO
17		C-XX-05	SUPPLY FAN STATUS	DI
18		C-XX-06	RETURN FAN STATUS	DI
19				
20		TT-XX-AA	SPACE TEMP - ZONE AA	AI
21		DA-XX-AA	ZONE DAMPER - ZONE AA	AO
22		TT-XX-BB	SPACE TEMP - ZONE BB	AI
23		DA-XX-BB	ZONE DAMPER - ZONE BB	AO
24		TT-XX-CC	SPACE TEMP - ZONE CC	AI
25		DA-XX-CC	ZONE DAMPER - ZONE CC	AO
26				
27				
28				
29				
30				

Figure 4-14j. DDC control system I/O table and data terminal strip layout for multizone HVAC system.