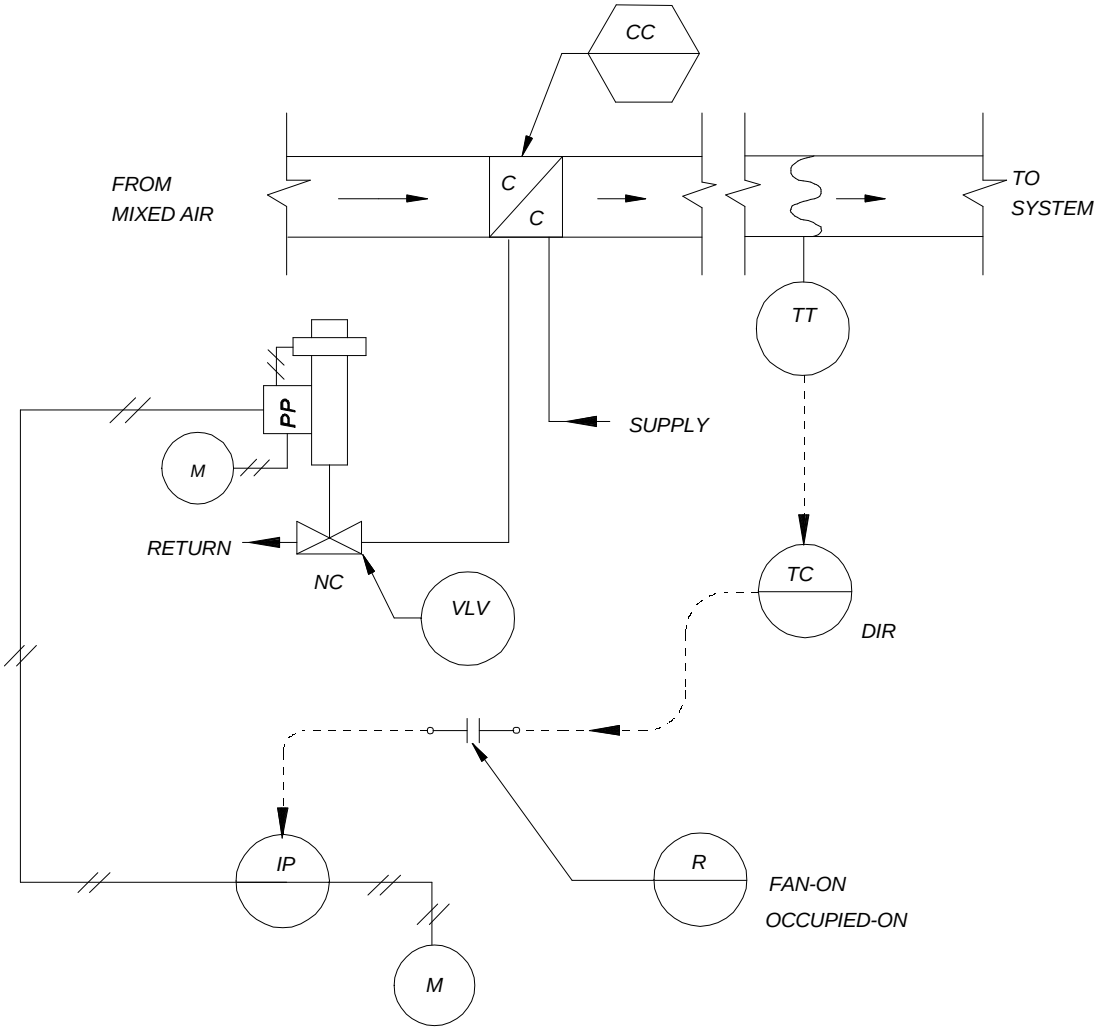

Figure 3-1. Cooling coil temperature control loop.

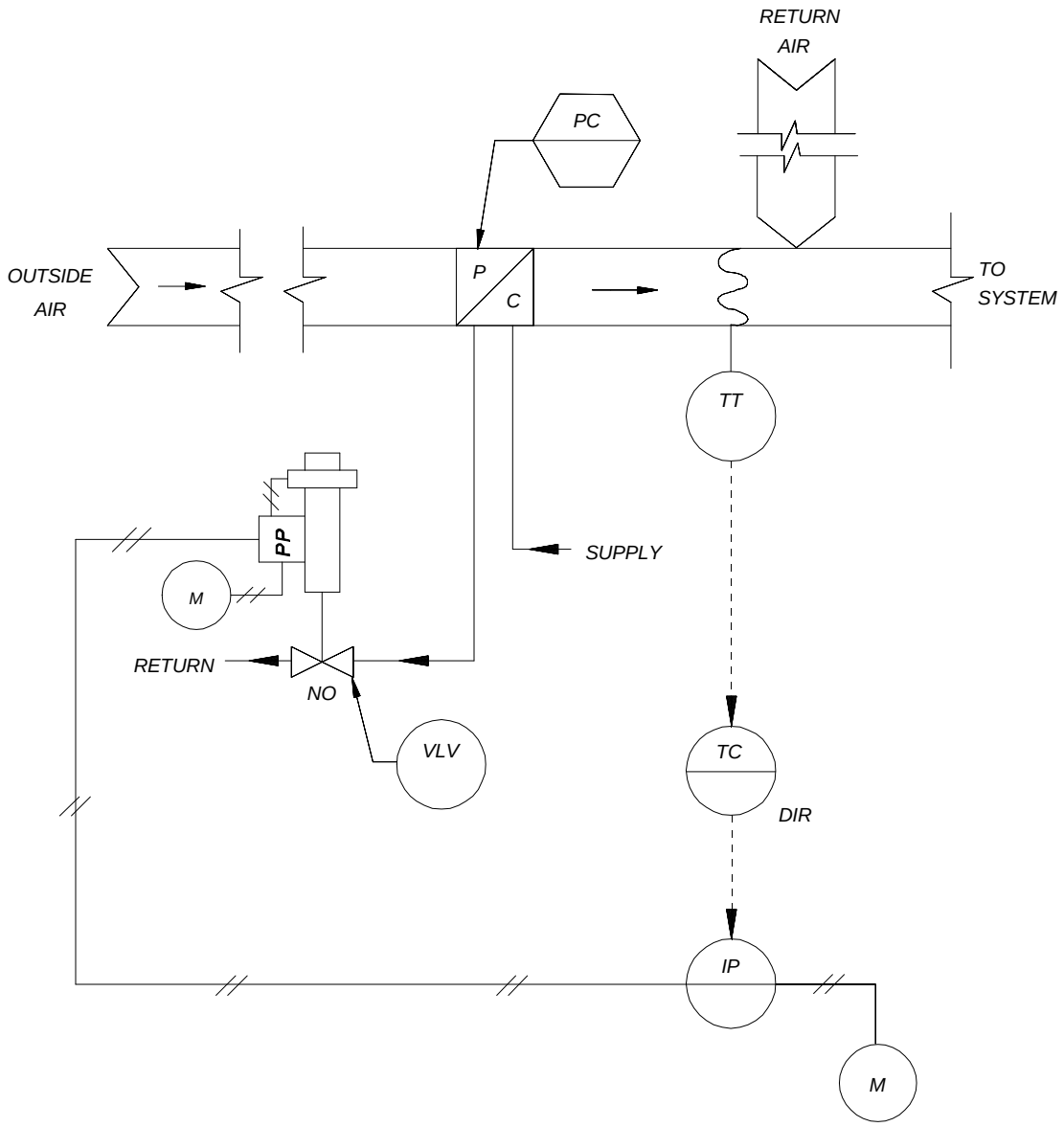

Figure 3-2. Outside air preheat coil temperature control loop.

OUTSIDE-AIR TEMPERATURE DEG. C (DEG. F)	HEATING COIL LEAVING-AIR TEMPERATURE DEG. C (DEG. F)
BELOW -18 (0)	49 (120)
-18 (0)	49 (120)
16 (60)	32 (90)
ABOVE 16 (60)	32 (90)

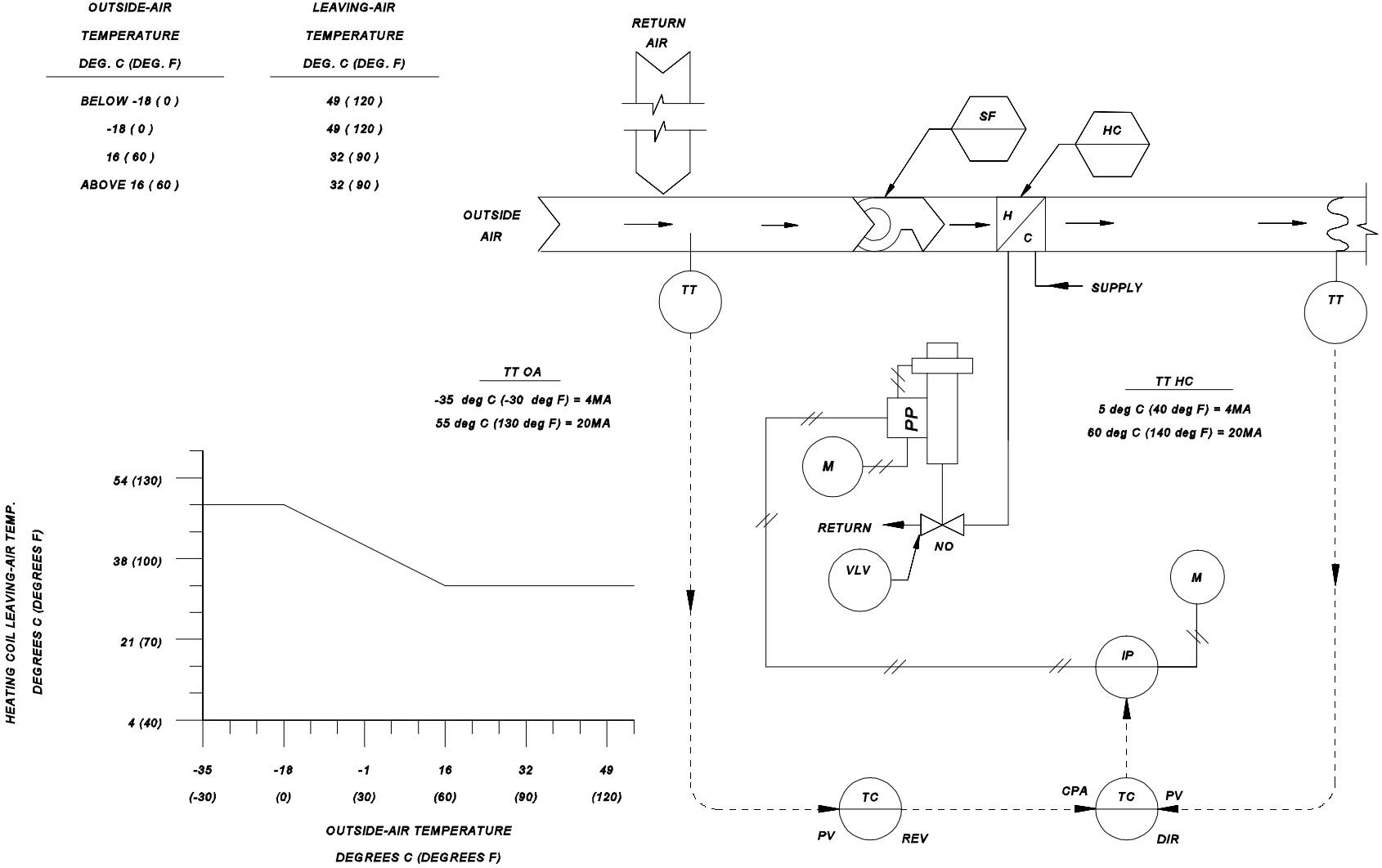

Figure 3-3. Heating coil temperature control loop (scheduled from outside air temperature).

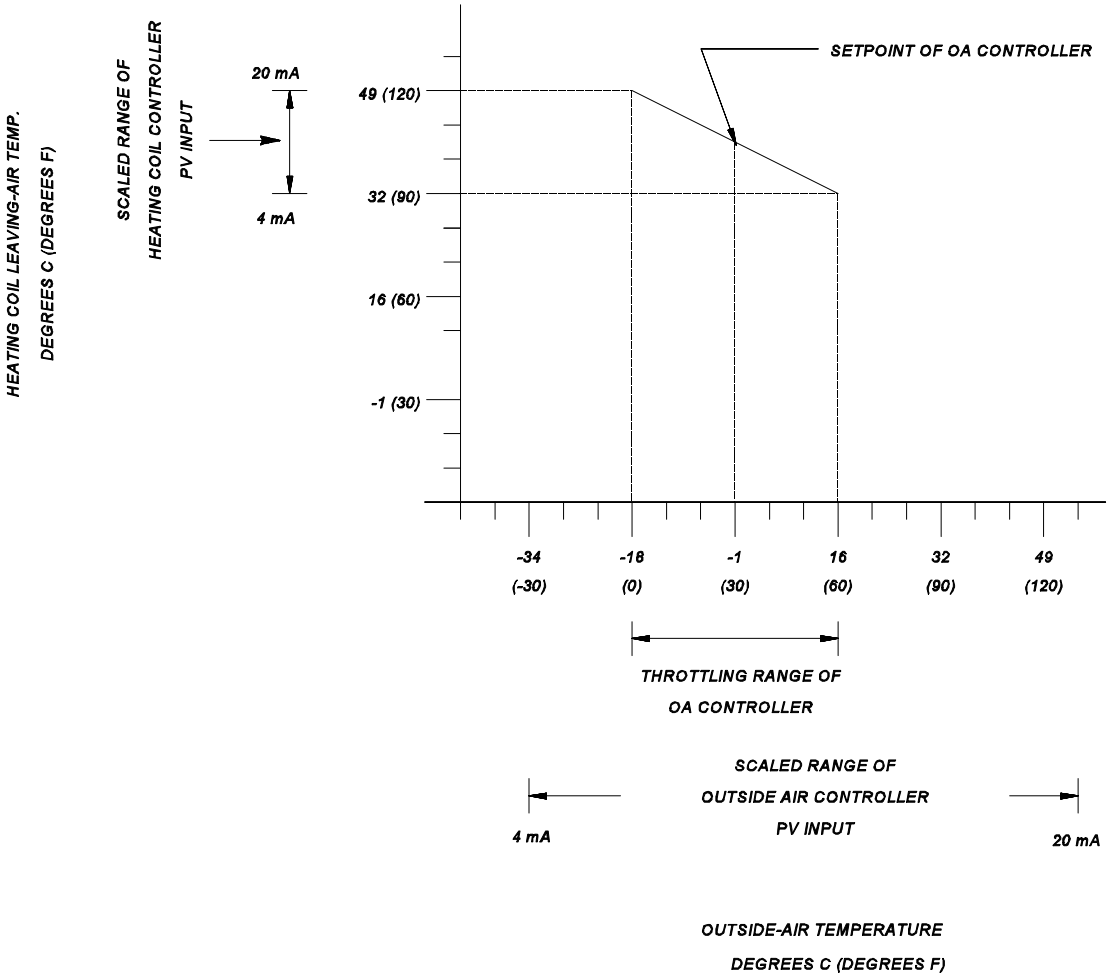

Figure 3-4. Outside air temperature controller input / output schedule.

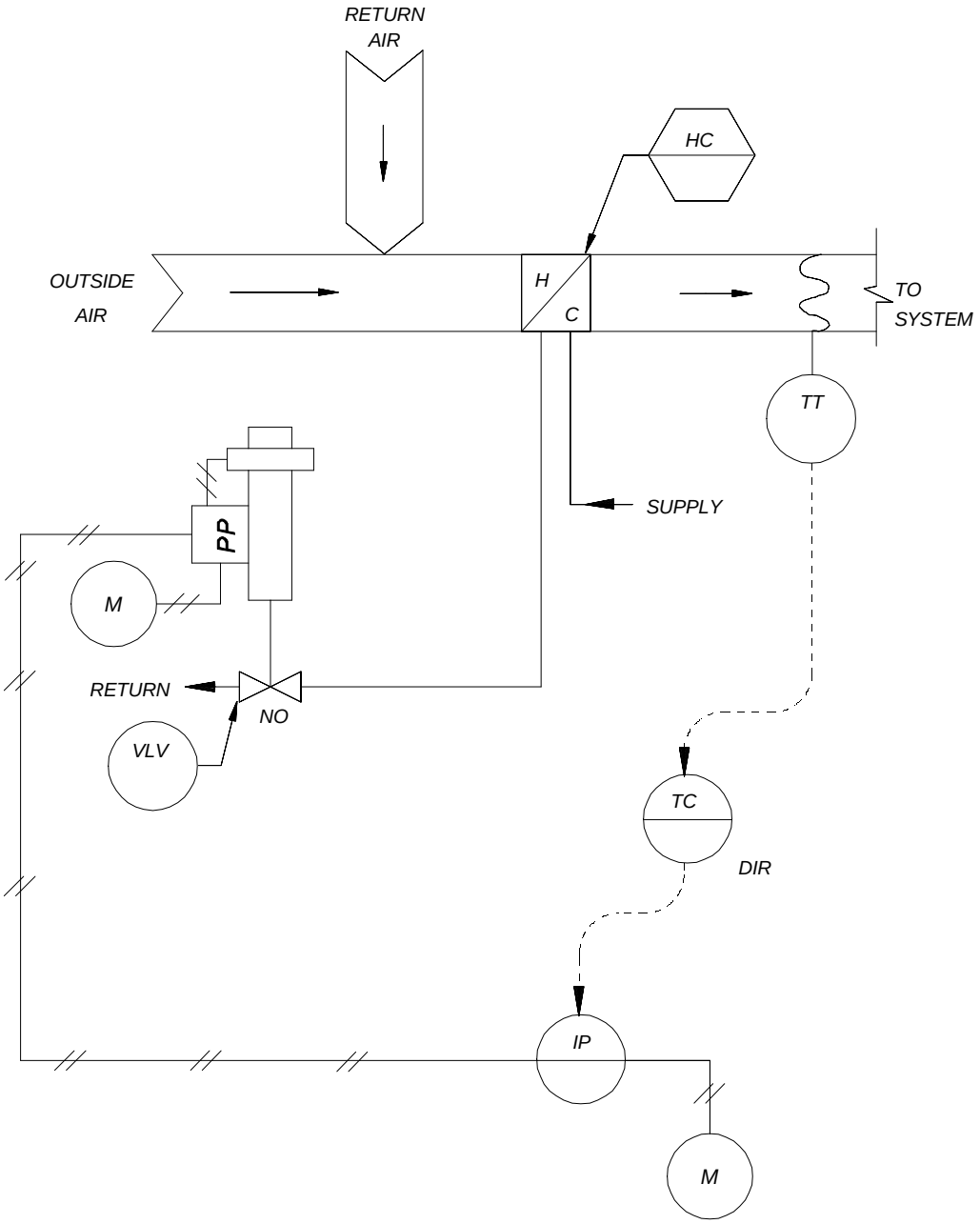

Figure 3-5. Heating coil temperature control loop with heating coil controlled at a constant temperature.

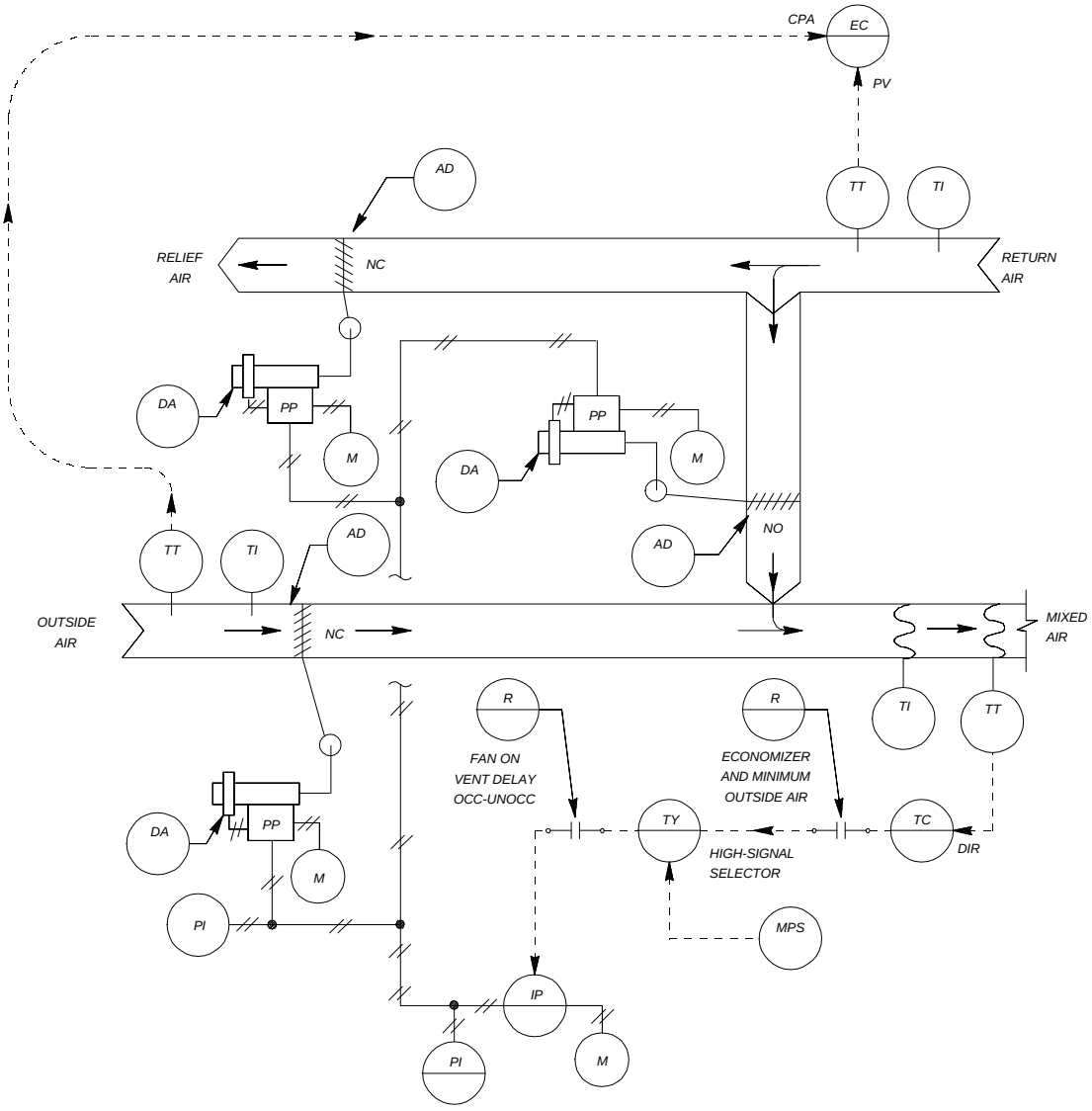

Figure 3-6. Mixed air temperature and economizer control loops.

OUTSIDE-AIR CONDITIONS	ADVANTAGEOUS OPERATING MODE	CONTROL-SYSTEM OPERATING MODE	REASONS
REGION A	ECONOMIZER	ECONOMIZER	ENTHALPY OA < ENTHALPY RA TEMPERATURE OA < TEMPERATURE RA
REGION B	MINIMUM OUTSIDE-AIR	MINIMUM OUTSIDE-AIR	ENTHALPY OA > ENTHALPY RA EVEN IF TEMPERATURE OA < TEMPERATURE RA
REGION C	MINIMUM OUTSIDE-AIR	MINIMUM OUTSIDE-AIR	ENTHALPY OA > ENTHALPY RA TEMPERATURE OA > TEMPERATURE RA
REGION D	ECONOMIZER	MINIMUM OUTSIDE-AIR	ENTHALPY OA < ENTHALPY RA EVEN IF TEMPERATURE OA > TEMPERATURE RA

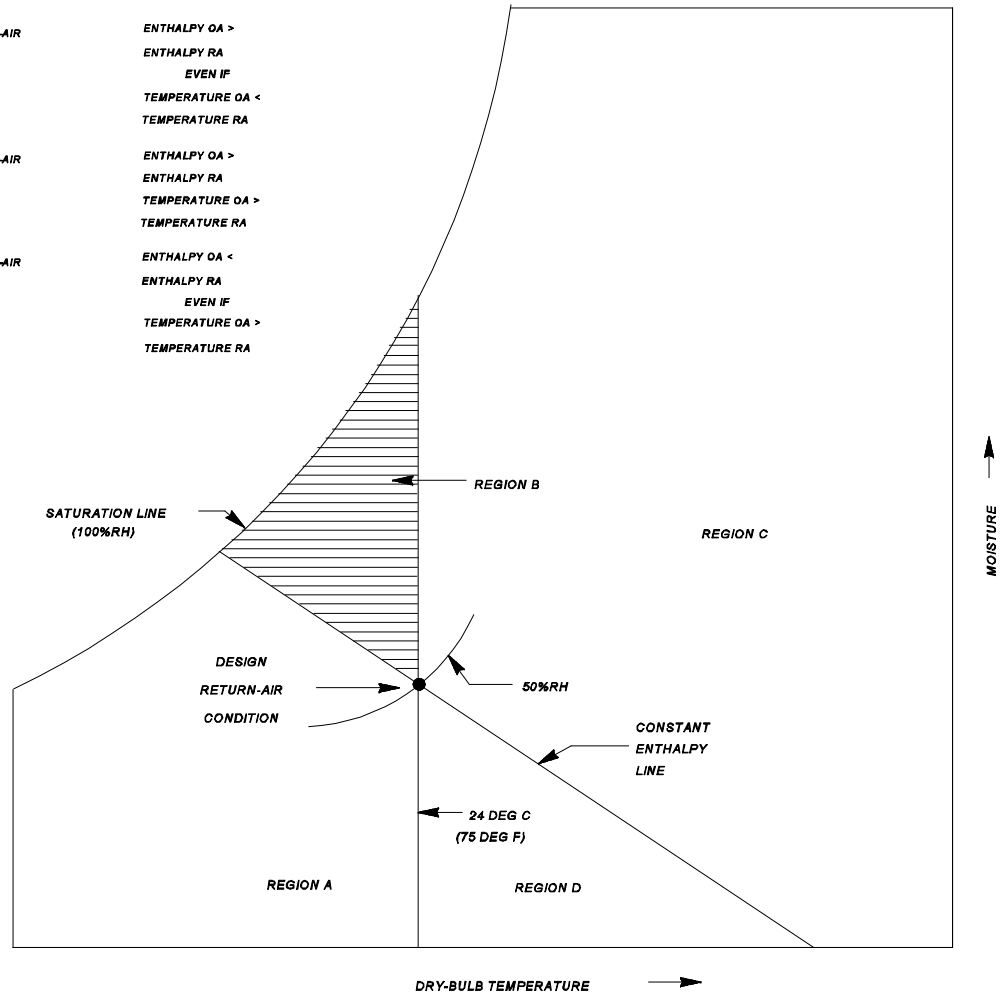

Figure 3-7. Design condition for economizer mode operation.

OUTSIDE-AIR DRY-BULB TEMPERATURE BIN DEG C / (DEG F)	MIDPOINT OF TEMPERATURE BIN DEG C (DEG F)	OUTSIDE-AIR MEAN COINCIDENT WET-BULB TEMPERATURE FOR BIN DEG C (DEG F)
37.8 - 40.6 / (100-105)	39.2 (102.5)	25.0 (77)
35.0 - 37.8 / (95-100)	36.4 (97.5)	25.0 (77)
32.2 - 35.0 / (90-95)	33.6 (92.5)	25.0 (77)
29.4 - 32.2 / (85-90)	30.8 (87.5)	23.3 (74)
26.7 - 29.4 / (80-85)	28.0 (82.5)	22.2 (72)
23.9 - 26.7 / (75-80)	25.3 (77.5)	21.1 (70)
21.1 - 23.9 / (70-75)	22.5 (72.5)	20.0 (68)
18.3 - 21.1 / (65-70)	19.7 (67.5)	17.2 (63)
15.6 - 18.3 / (60-65)	16.9 (62.5)	14.4 (58)
12.8 - 15.6 / (55-60)	14.2 (57.5)	11.7 (53)
10.0 - 12.8 / (50-55)	11.4 (52.5)	8.9 (48)

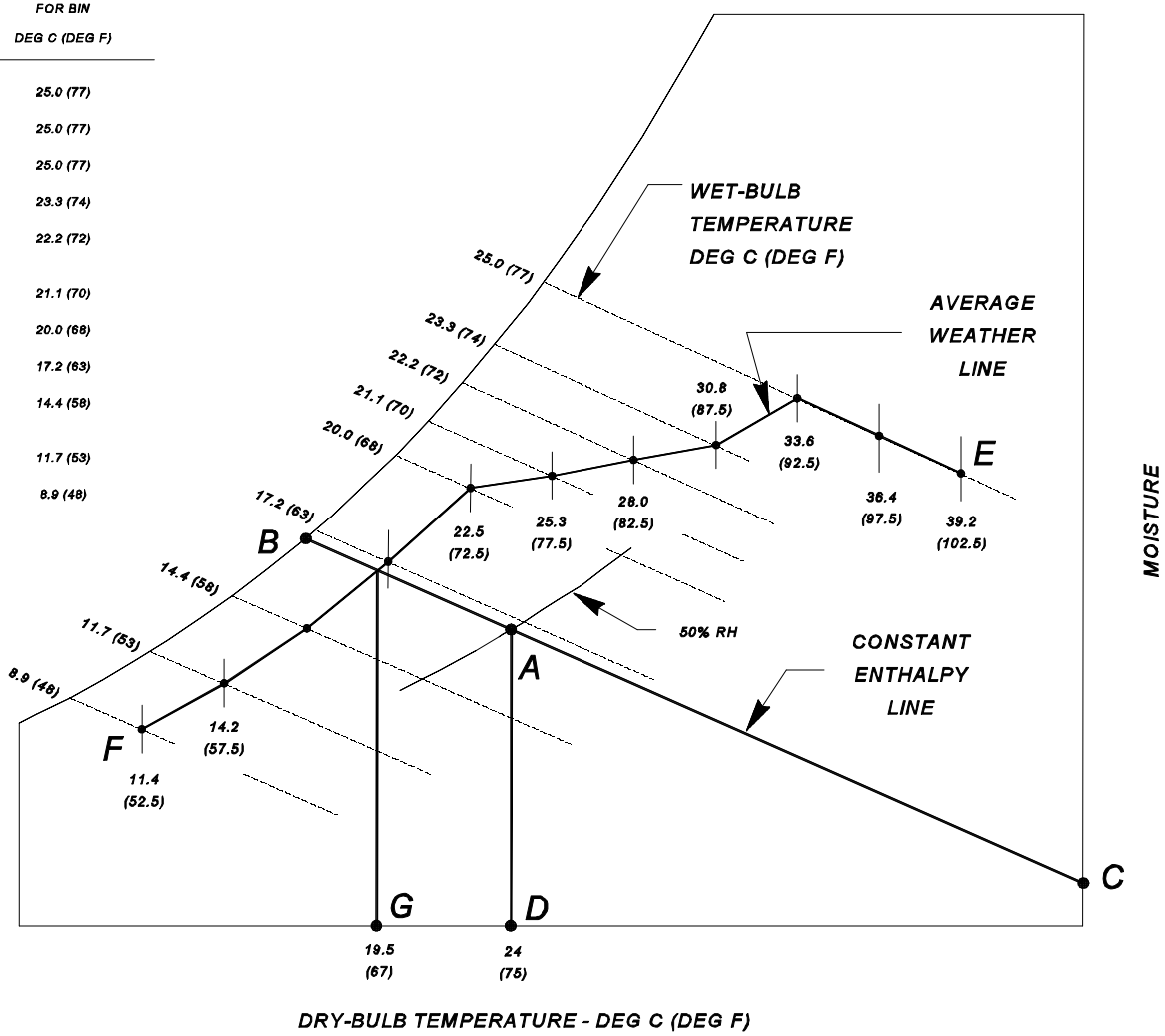

Figure 3-8. Selecting the economizer switchover point.

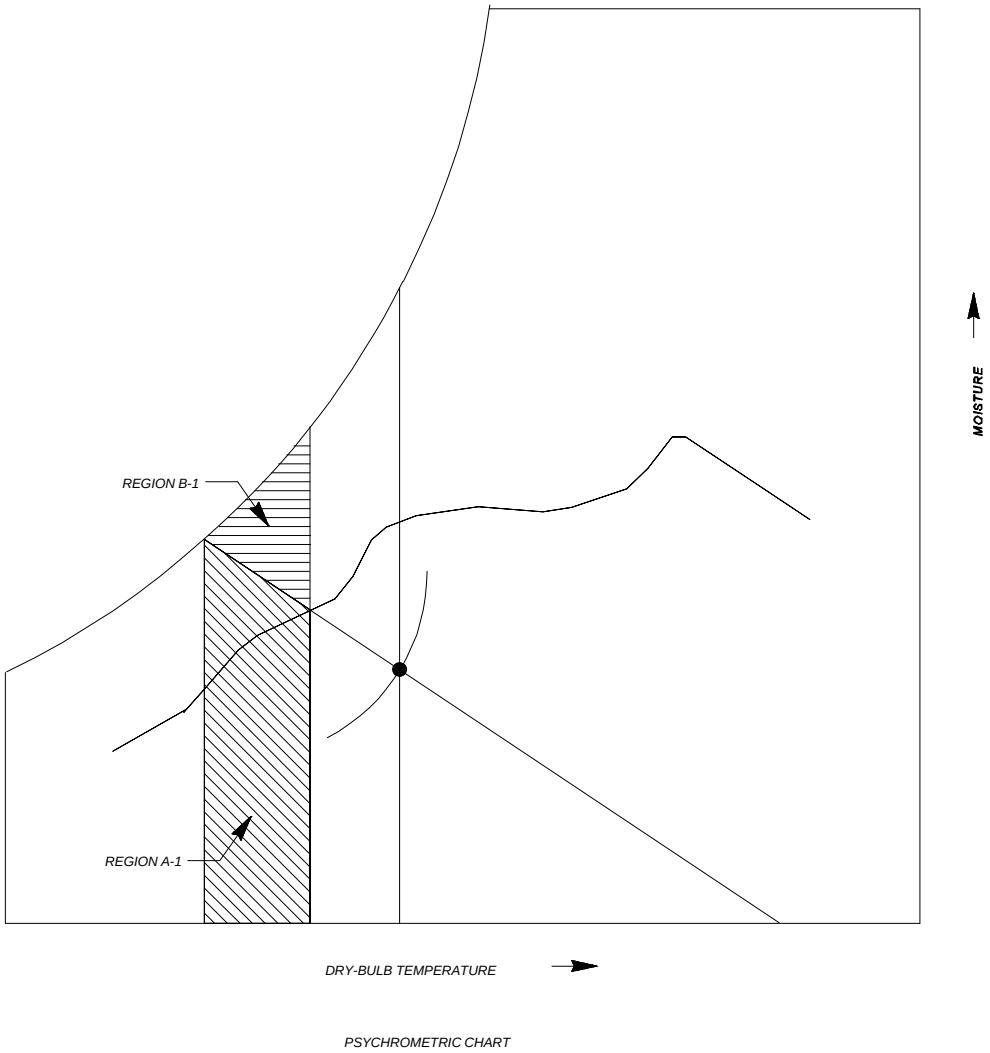

Figure 3-9. Effect on energy conservation of selection of the economizer switchover point.

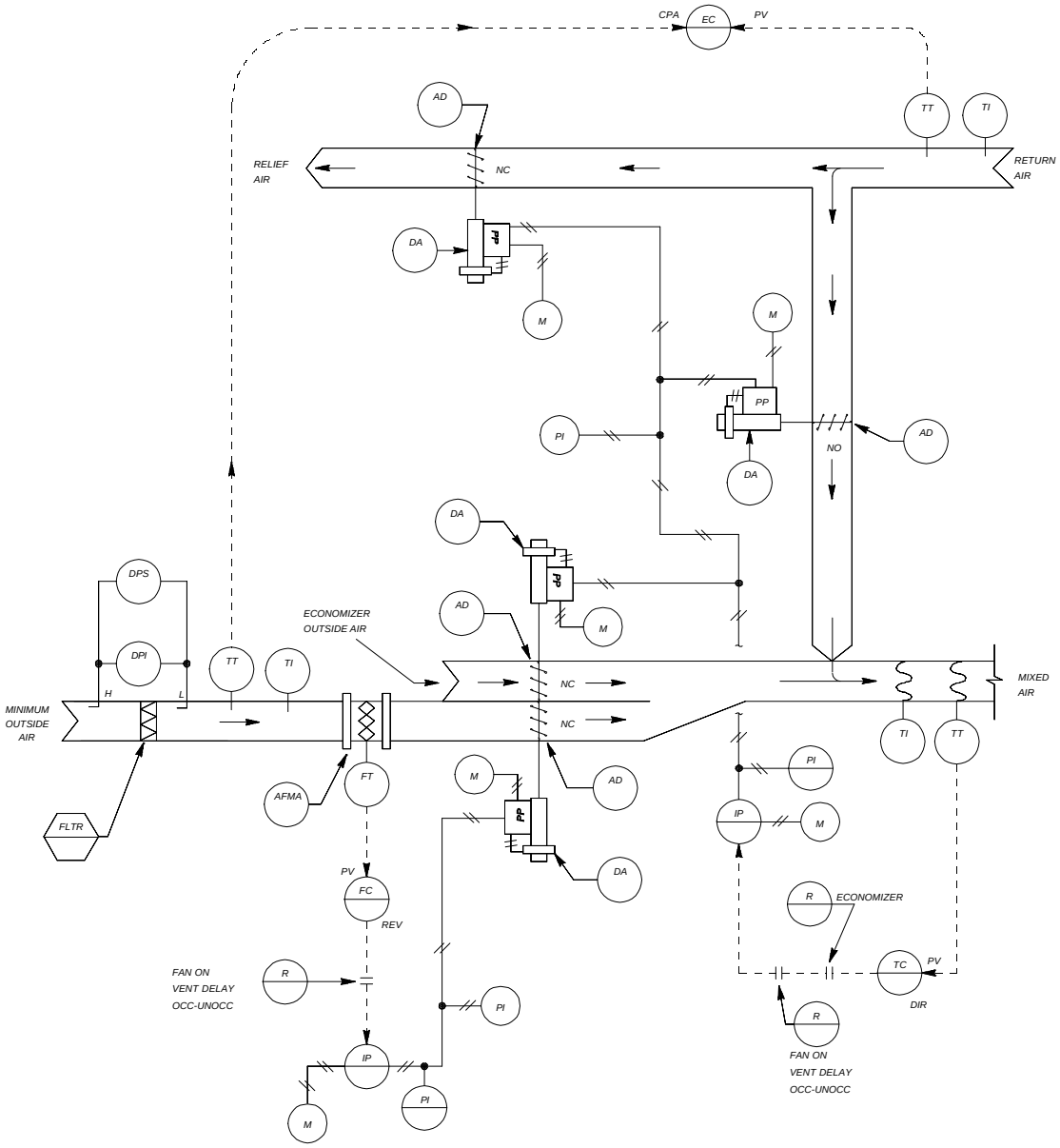

Figure 3-10. Minimum outside air and mixed air temperature / economizer control loops for VAV systems.

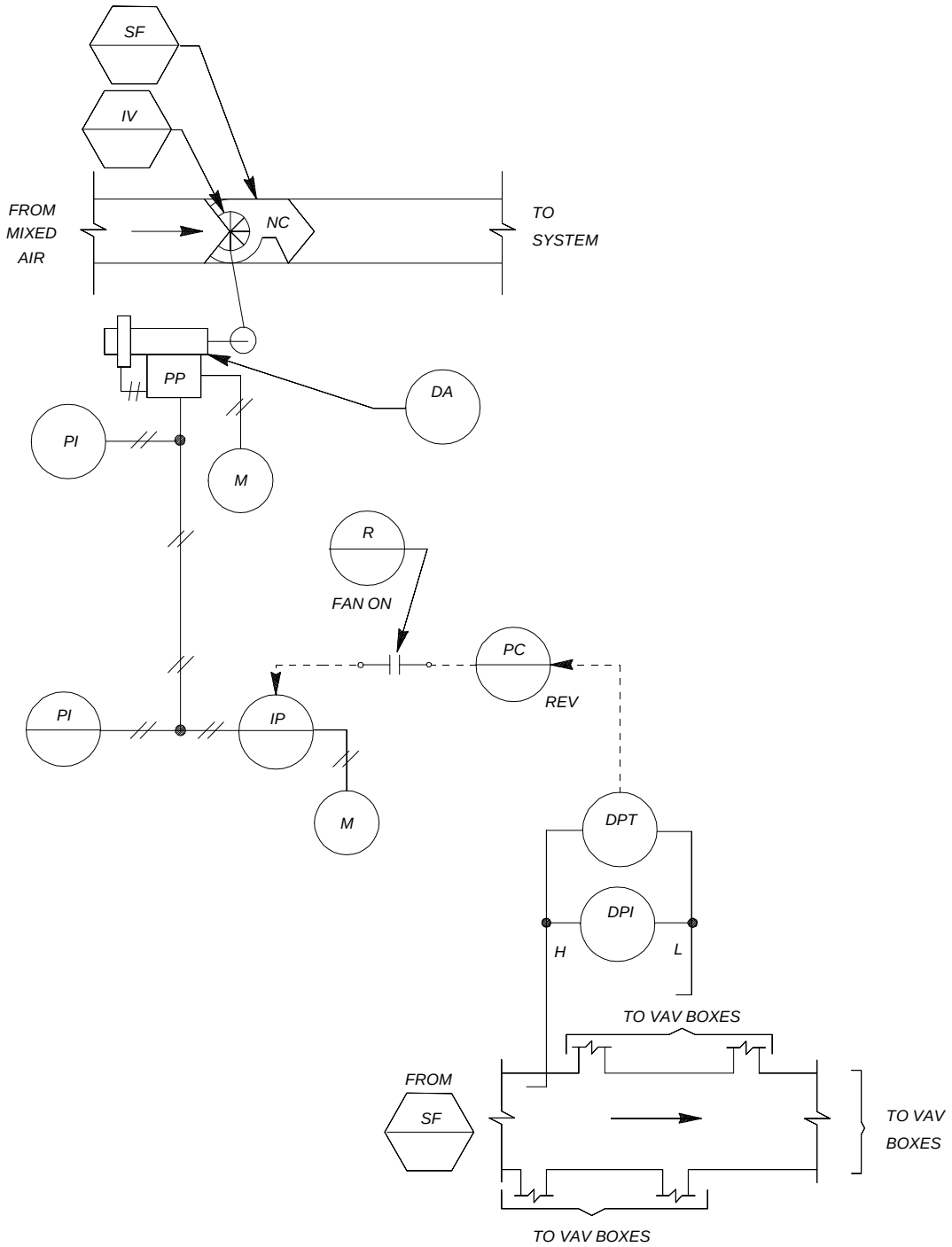

Figure 3-11. Supply duct static pressure control loop.

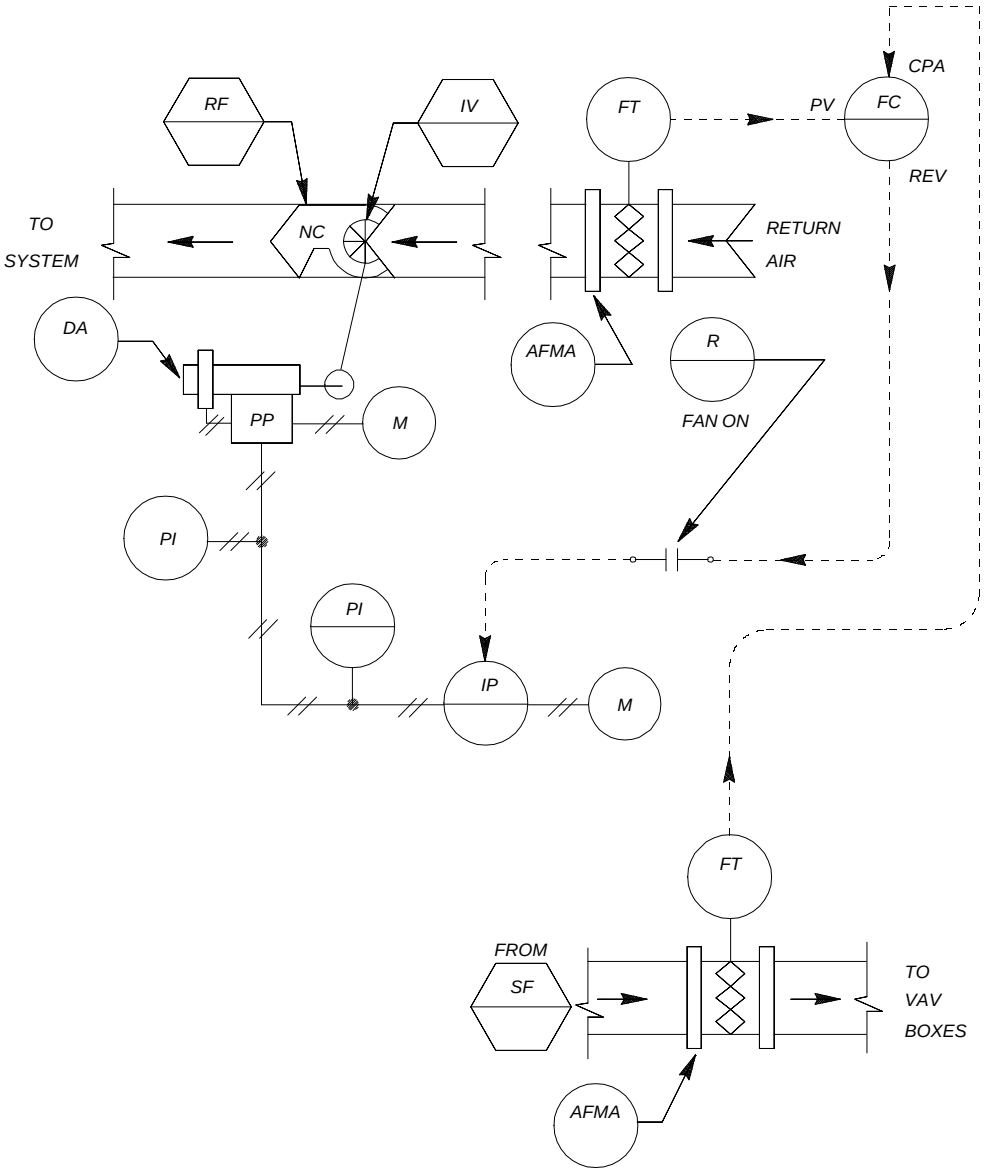

Figure 3-12. Return fan volume control loop.

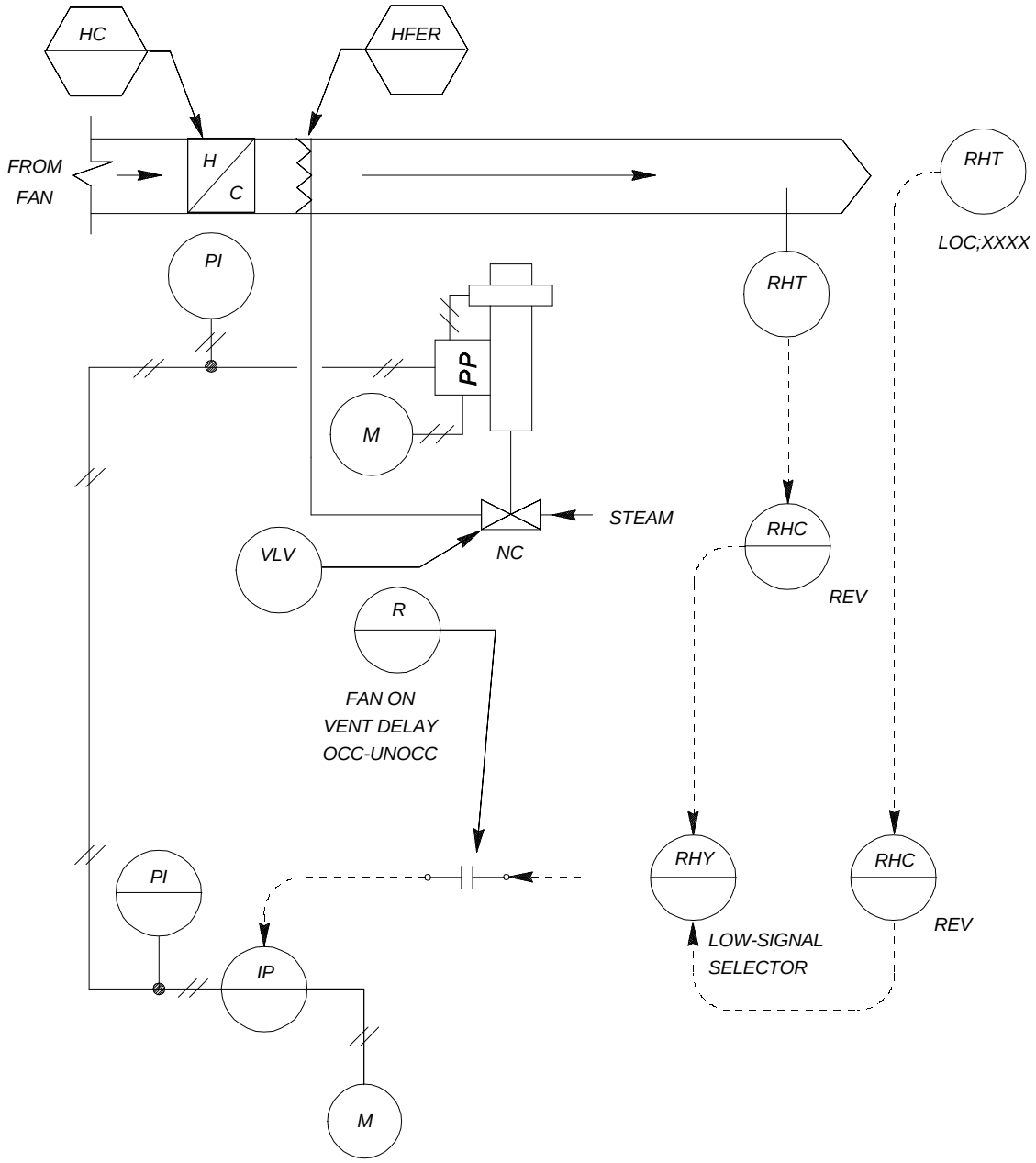

Figure 3-13. Humidifier control loop.

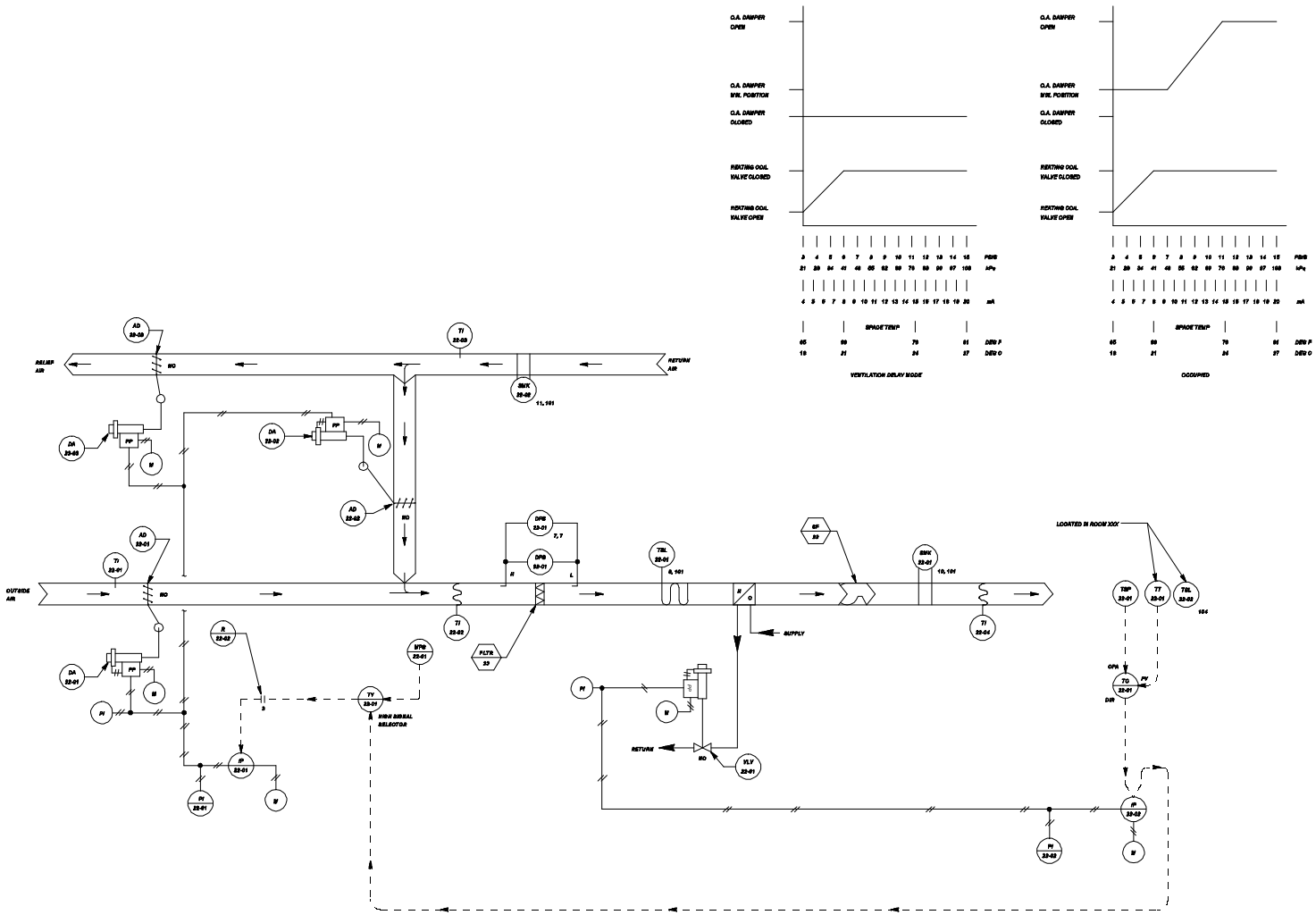

Figure 3-14. Typical single-loop controller schematic.

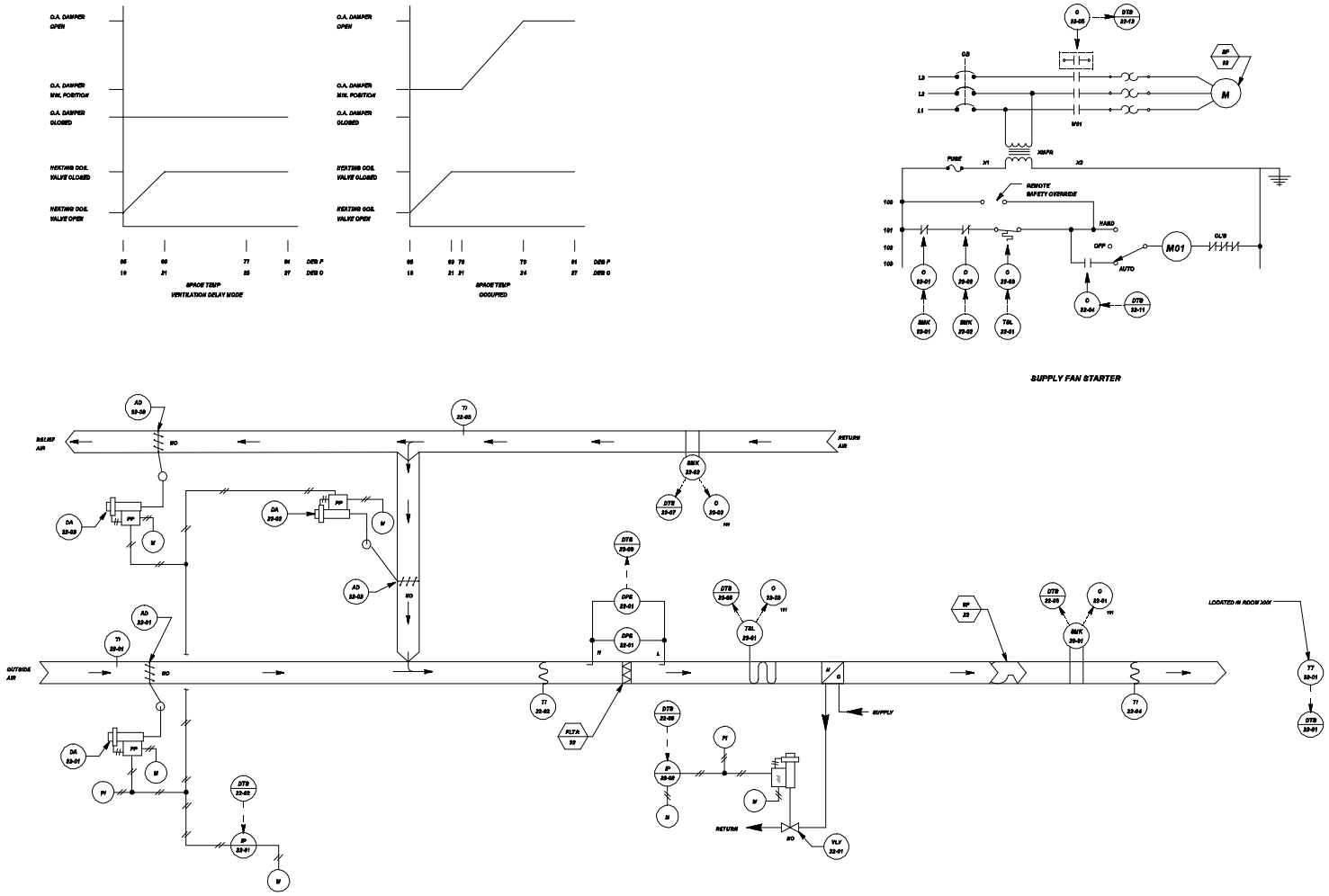

Figure 3-15. Typical DDC schematic.

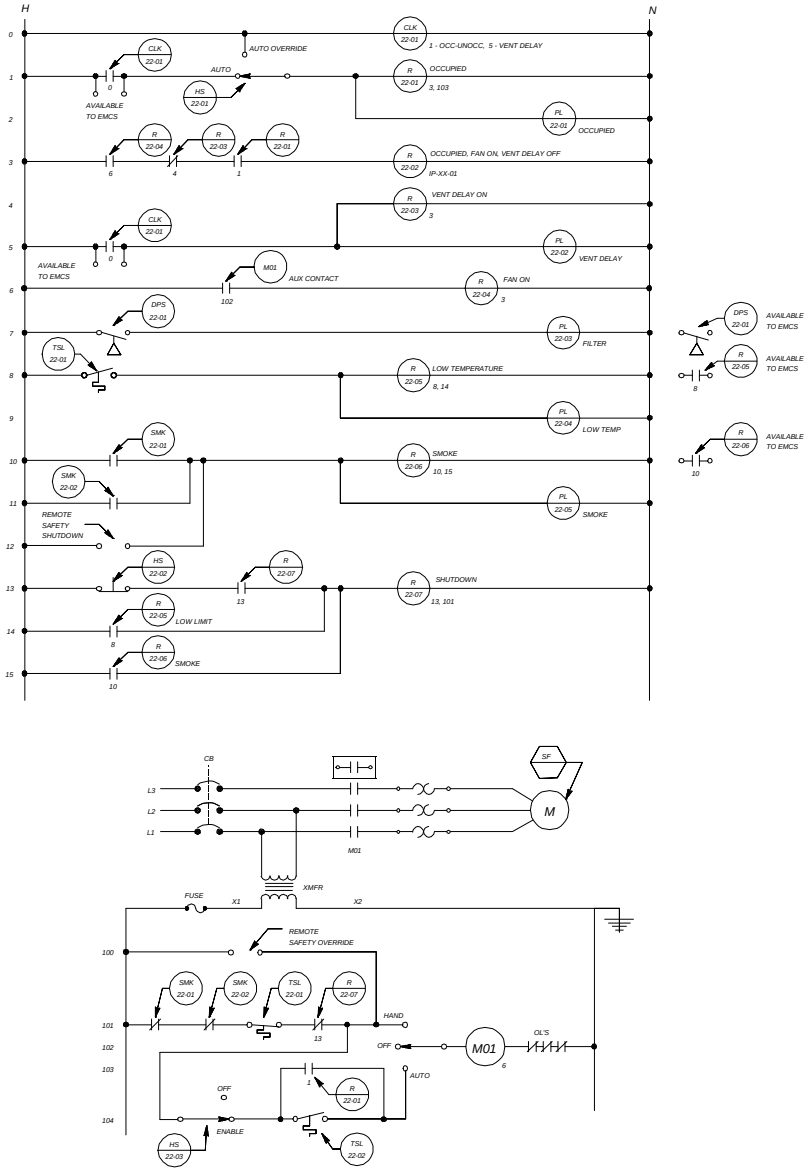

Figure 3-16. Typical ladder diagram.

LOOP CONTROL FUNCTION	DEVICE NUMBER	DEVICE FUNCTION	SETPOINT	RANGE	ADDITIONAL PARAMETERS
SPACE TEMPERATURE	DA-22-01 DA-22-02 DA-22-03	DAMPER ACTUATOR	———	48 - 76 kPa (7 - 11 PSIG)	———
	MPS-22-01	MINIMUM POSITION SWITCH	———	———	SET MIN OA L/s (CFM) EQUAL TO ___ L/S (___ CFM)
	TT-22-01	SPACE TEMPERATURE TRANSMITTER	———	10 TO 30 DEG C (50 TO 85 DEG F)	———
	TSP-22-01	SPACE TEMPERATURE SETPOINT ADJUSTMENT	4 mA = 10 DEG C (50 DEG F) 20 mA = 30 DEG C (85 DEG F)	———	———
	TC-22-01	SPACE TEMPERATURE CONTROLLER	4 mA = 10 DEG C (50 DEG F) 20 mA = 30 DEG C (85 DEG F)	10 TO 30 DEG C (50 TO 85 DEG F)	SET LIMITS AVAILABLE TO OCCUPANT BY TSP-22-01 AT 19 TO 22 DEG C (66 TO 72 DEG F)
	VLV-22-01	HEATING COIL VALVE	———	21 - 41 kPa (3 - 6 PSIG)	Kv = __ (Cv = __) CLOSE AGAINST __ kPa (__ PSIG)
MIXED AIR	TSL-22-01	LOW TEMPERATURE PROTECTION THERMOSTAT	2 DEG C (35 DEG F)	———	———
	DPS-22-01	FILTER ALARM	PER FILTER MANUFACTURER'S RECOMMENDATION	PER FILTER MANUFACTURER'S RECOMMENDATION	———
SPACE LOW TEMPERATURE	TSL-22-02	NIGHT STAT - SPACE LOW TEMPERATURE PROTECTION	13 DEG C (55 DEG F)	DIFFERENTIAL = 3 DEG C (5 DEG F)	———
OCCUPIED MODE	CLK-22-01 CONTACT	365 DAY SCHEDULE	———	NORMAL SCHEDULE (M-F) CONTACT CLOSED: 0700 HRS CONTACT OPEN: 1700 HRS	CONTACT OPEN: SAT, SUN
VENTILATION DELAY MODE	CLK-22-01 CONTACT	365 DAY SCHEDULE	———	NORMAL SCHEDULE (M-F) CONTACT CLOSED: 0700 HRS CONTACT OPEN: 0800 HRS	

NOTE: OTHER CONTROL DEVICES SUCH AS I/Ps, RELAYS, AND SIGNAL SELECTERS ARE NOT SHOWN.

Figure 3-17. Typical equipment schedule.

	DEVICE NO.	DESCRIPTION	TYPE
1	TT-22-01	SPACE TEMPERATURE	AI
2	IP-22-01	MIXED AIR DAMPERS	AO
3	IP-22-02	HEATING COIL VALVE	AO
4			
5			
6	SMK-22-01	SUPPLY AIR SMOKE DETECTOR	DI
7	SMK-22-02	RETURN AIR SMOKE DETECTOR	DI
8	DPS-22-01	FILTER ALARM	DI
9	TSL-22-01	FREEZESTAT	DI
10			
11	C-22-04	SUPPLY FAN START/STOP	DO
12	C-22-05	SUPPLY FAN STATUS	DI
13			
14			
15			
16			
17			
18			
19			
20			

Figure 3-18. Typical DDC data terminal strip layout.