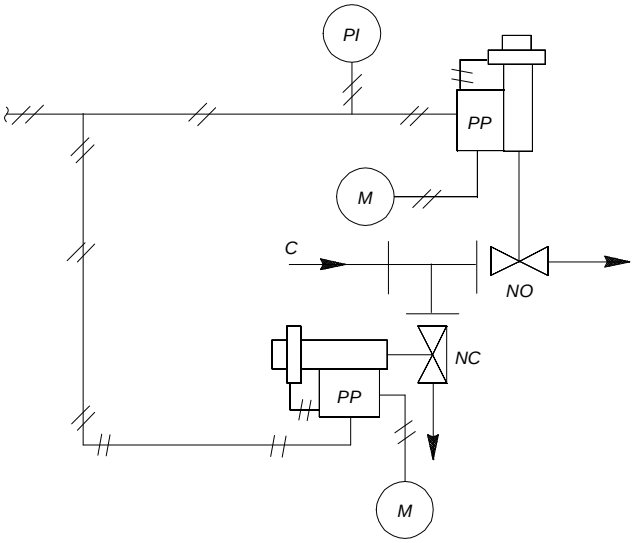

3-WAY BYPASS APPLICATION

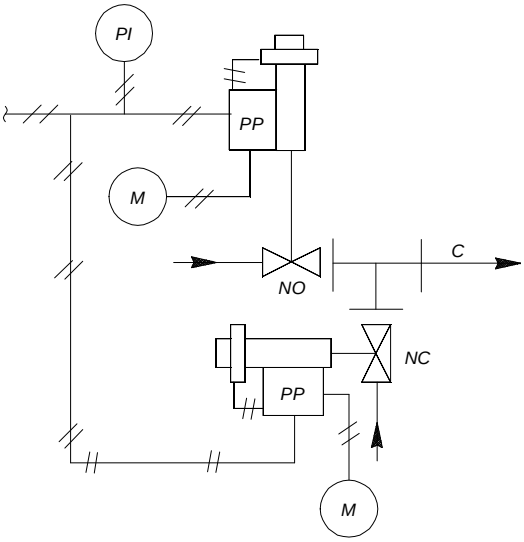

3-WAY MIXING APPLICATION

Figure 2-1. Two butterfly valves on a common pipe tee.

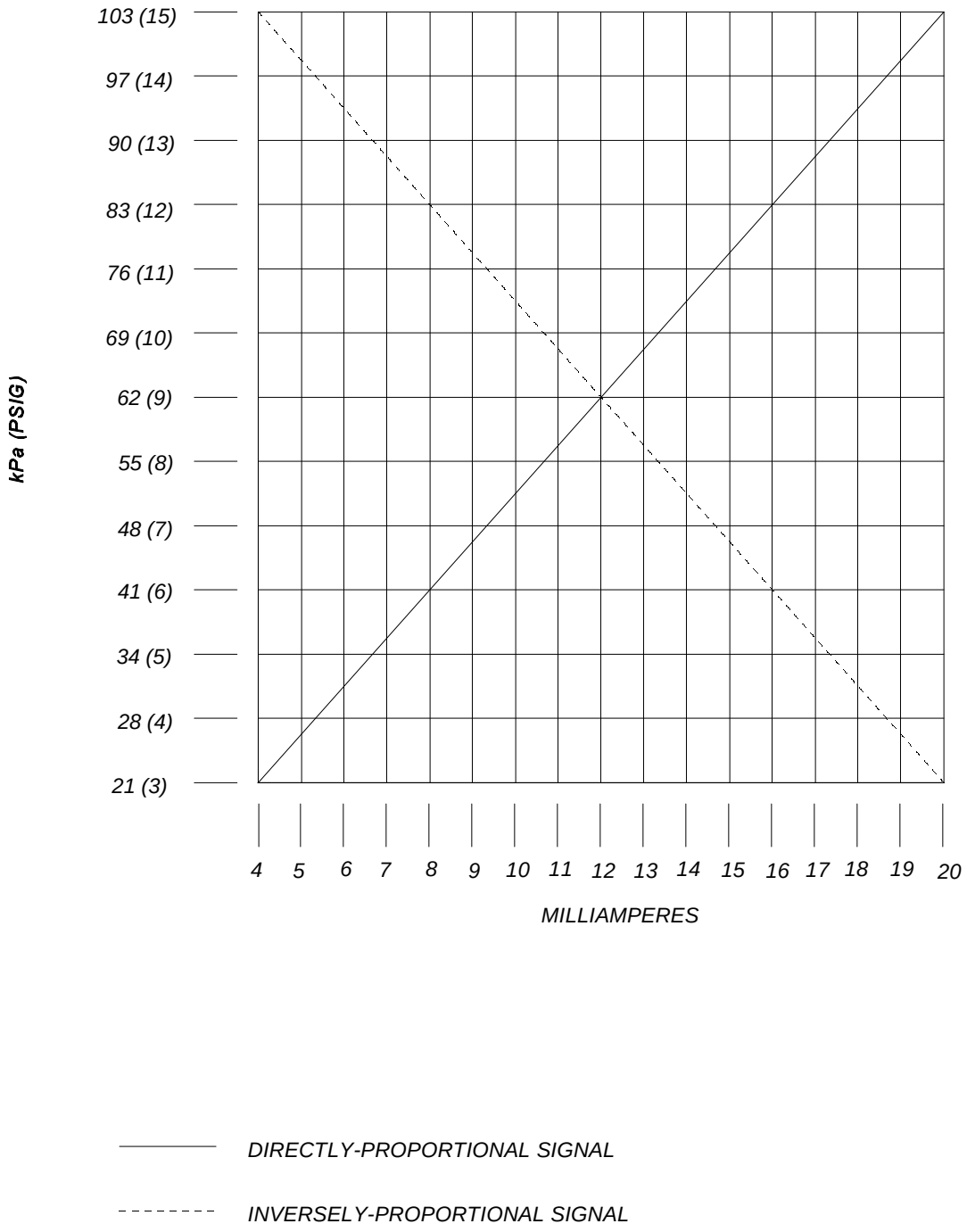

Figure 2-2. Conversion of an electronic signal to a pneumatic signal.

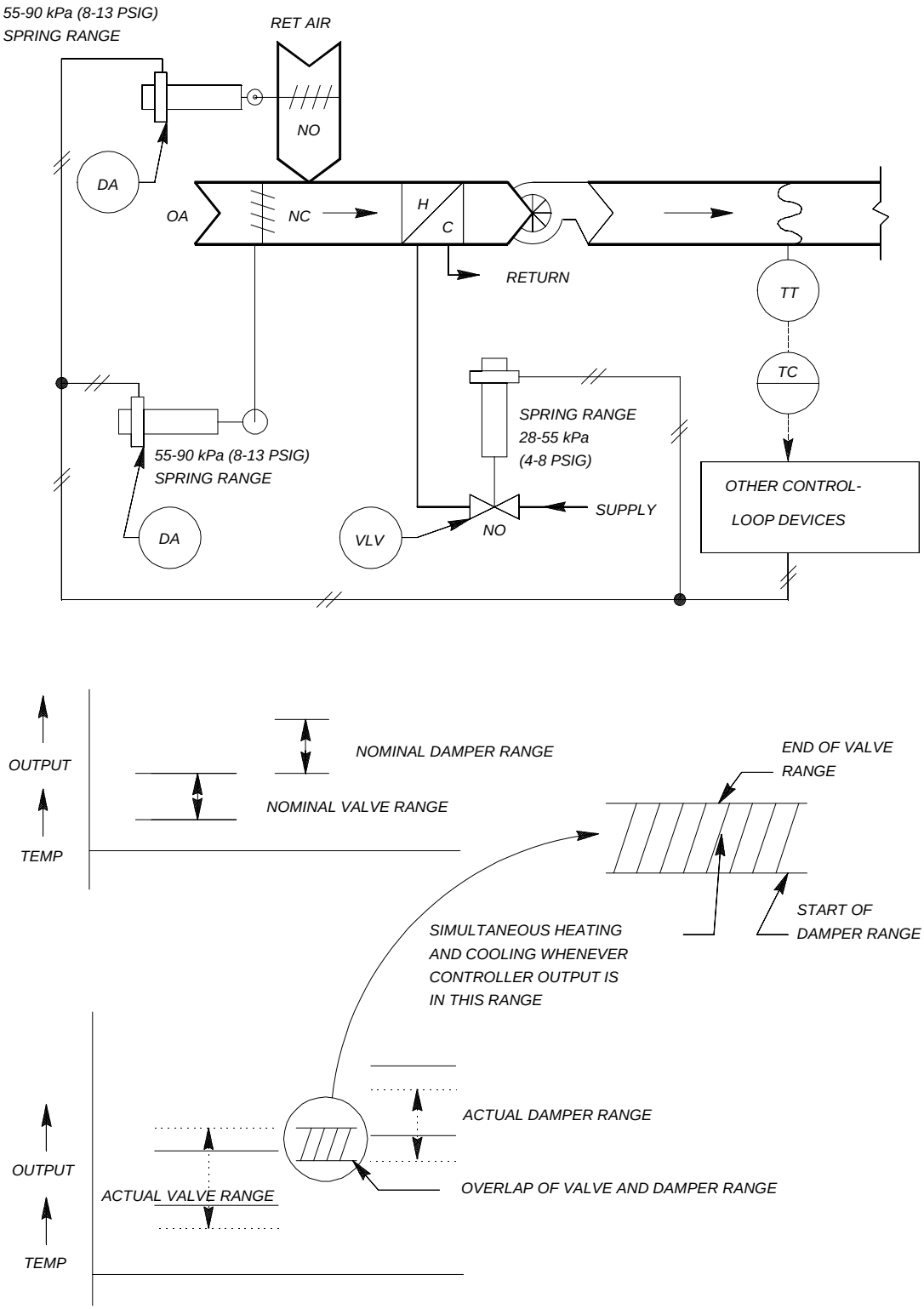

Figure 2-3. Simultaneous heating and cooling with pneumatic actuators without positive positioners.

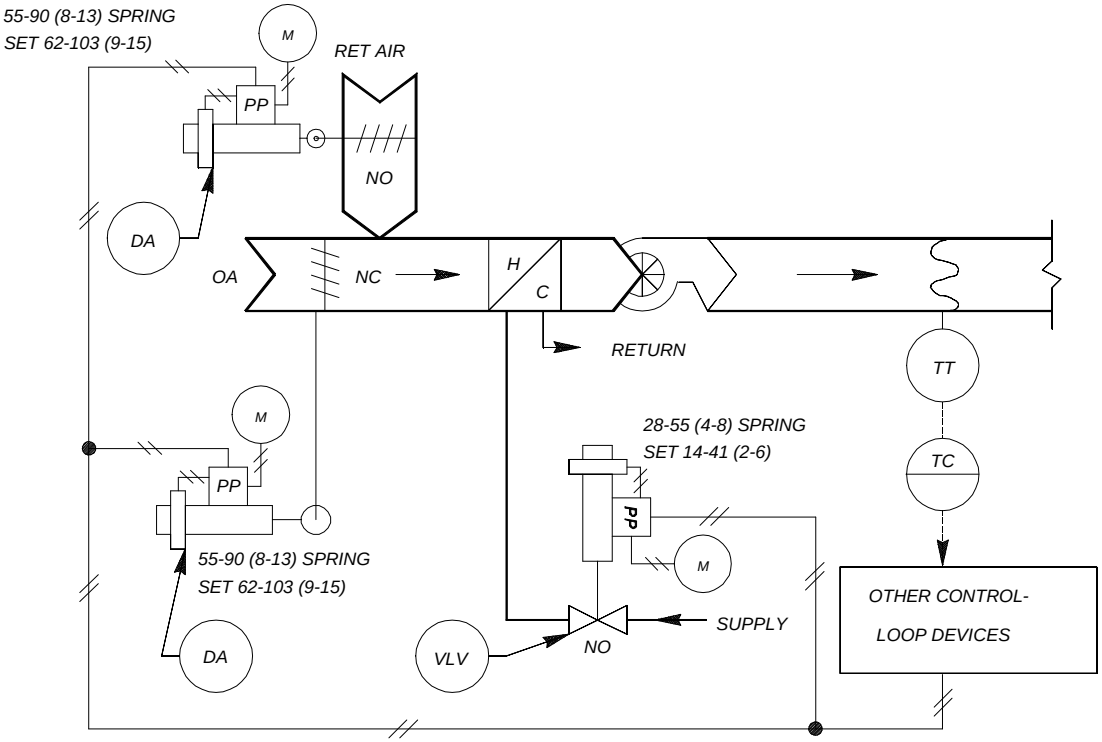

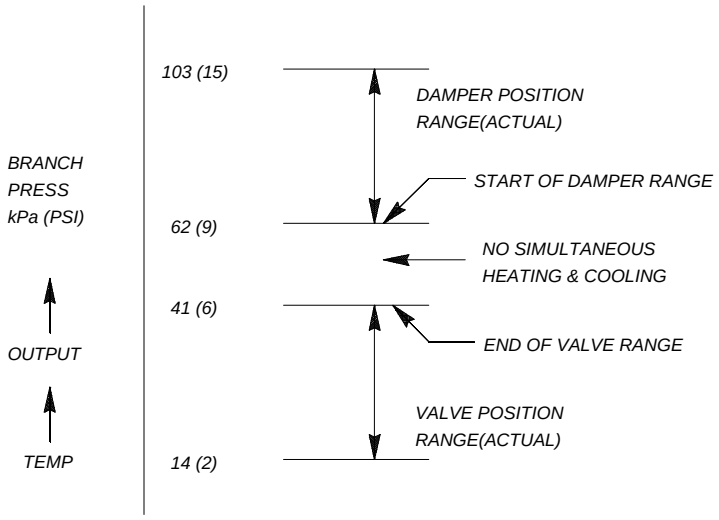

Figure 2-4. Control system with positive positioners to avoid simultaneous heating and cooling.

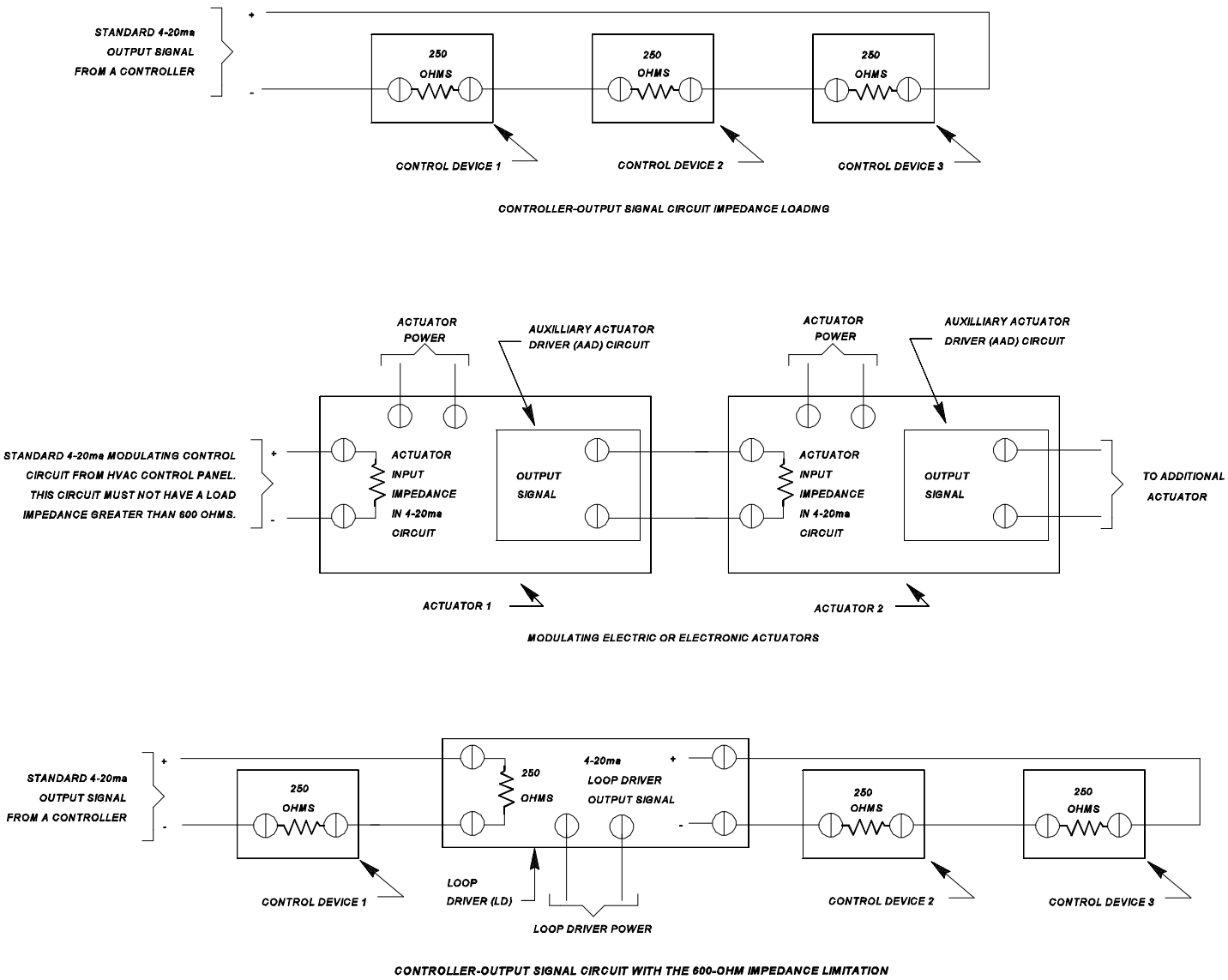

Figure 2-5. Modulating control circuits impedance limitation.

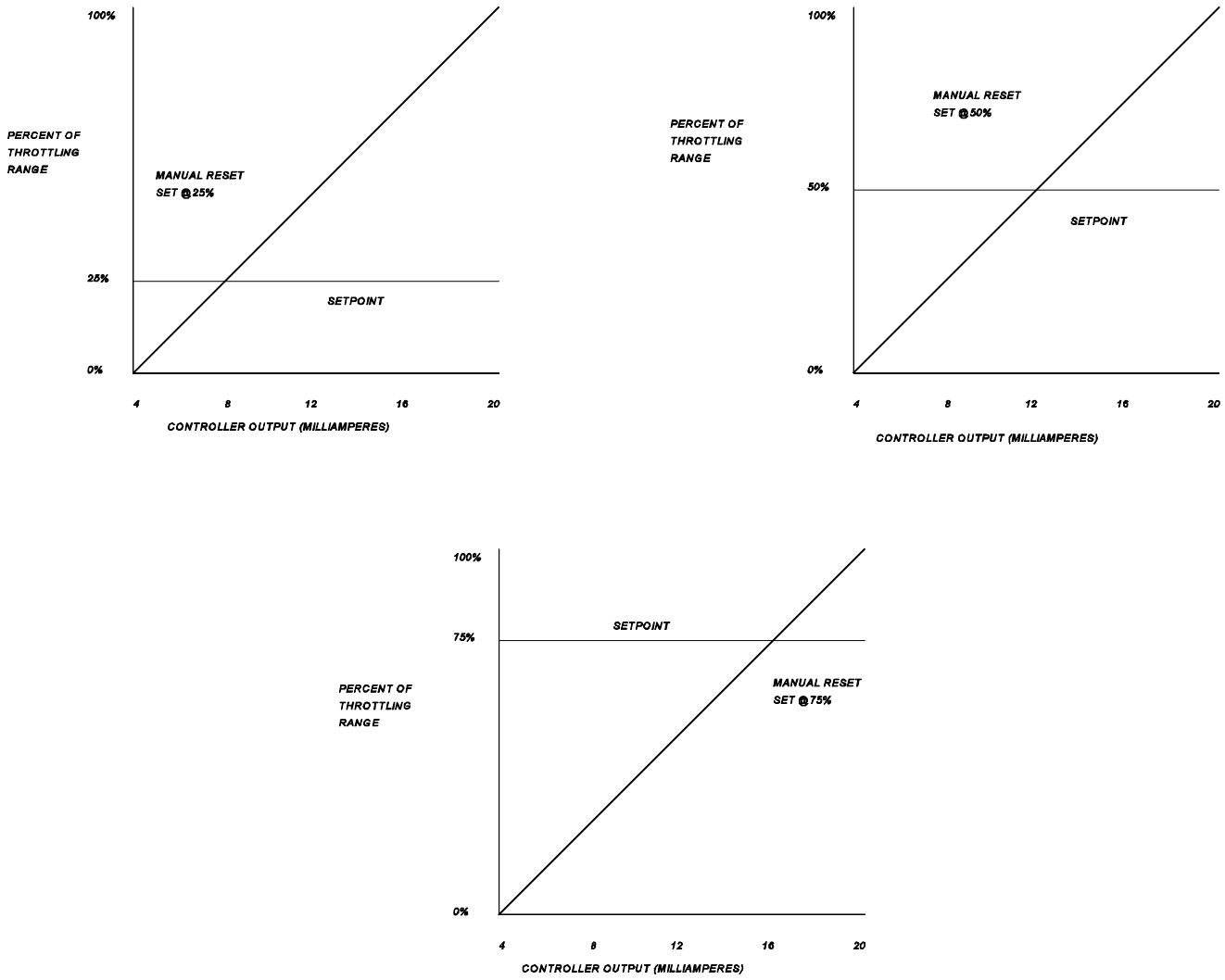

Figure 2-6. Manual reset feature.

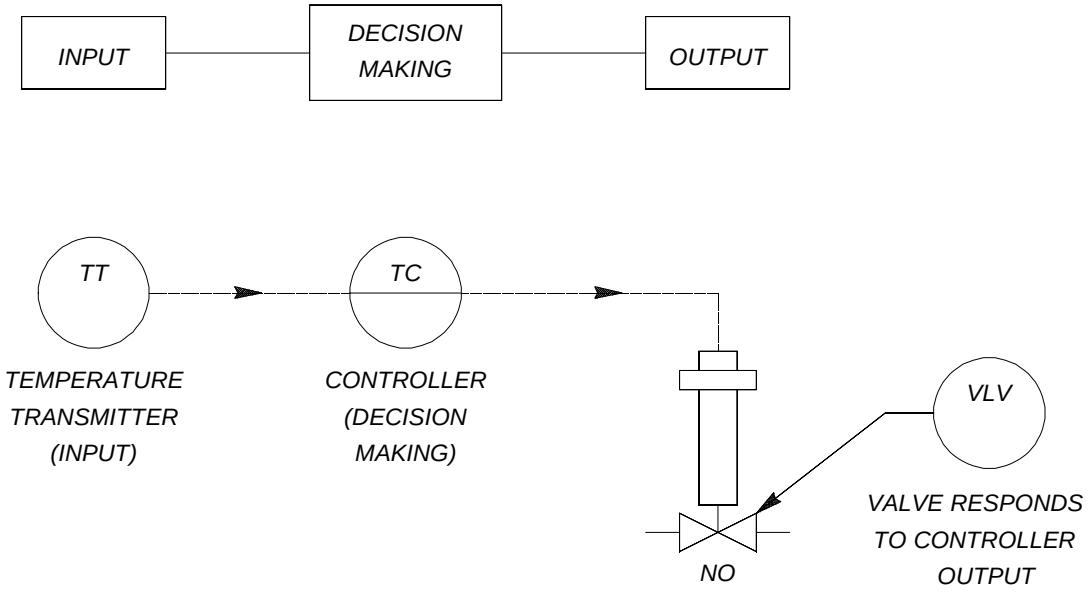

Figure 2-7. Control loop.

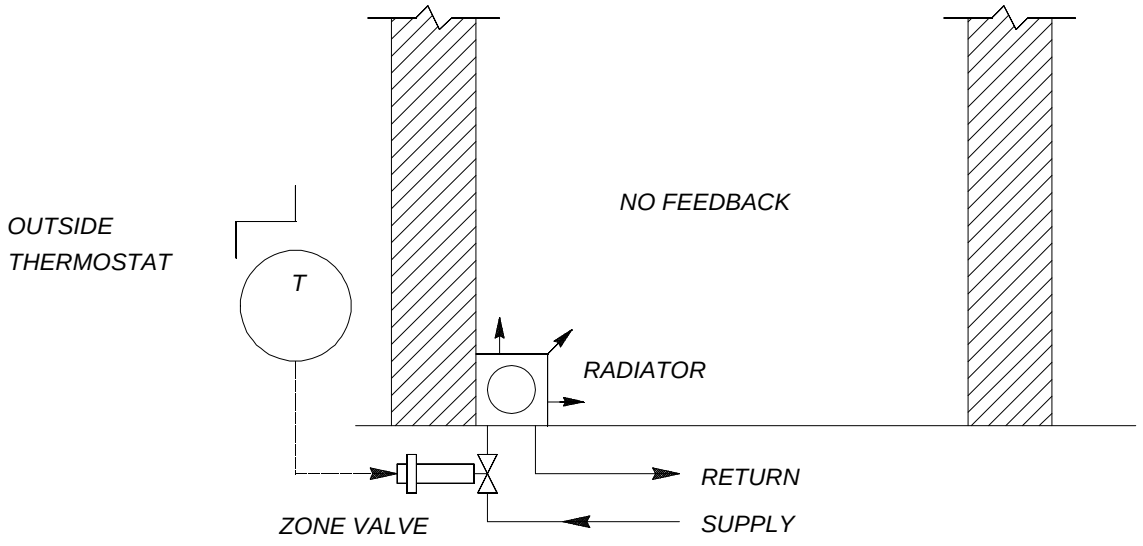

Figure 2-8. Open control loop.

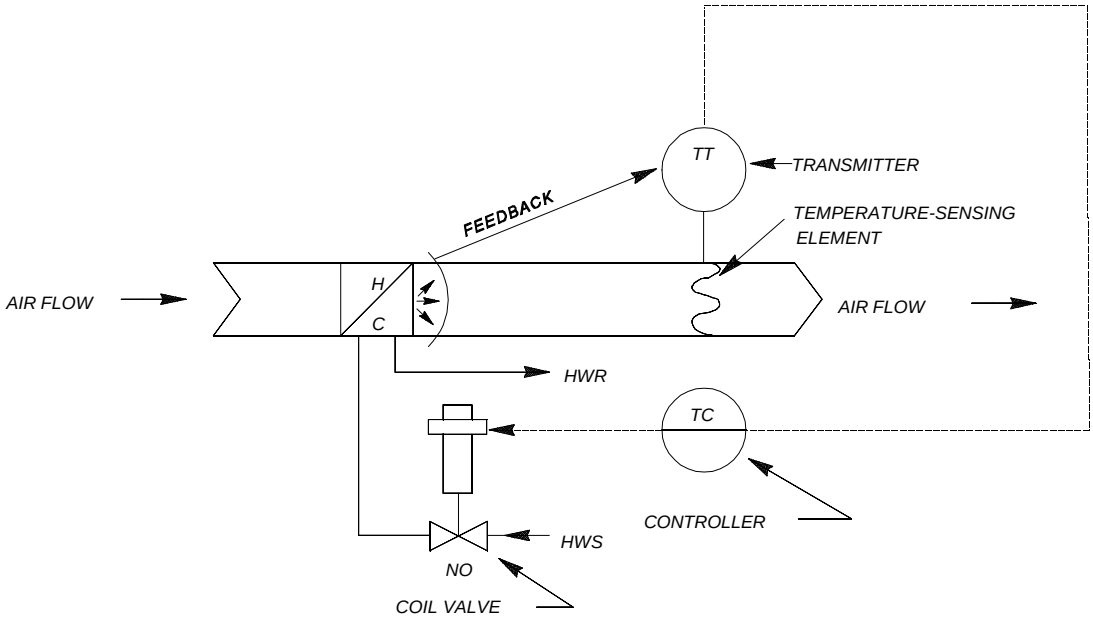

Figure 2-9. Closed control loop.

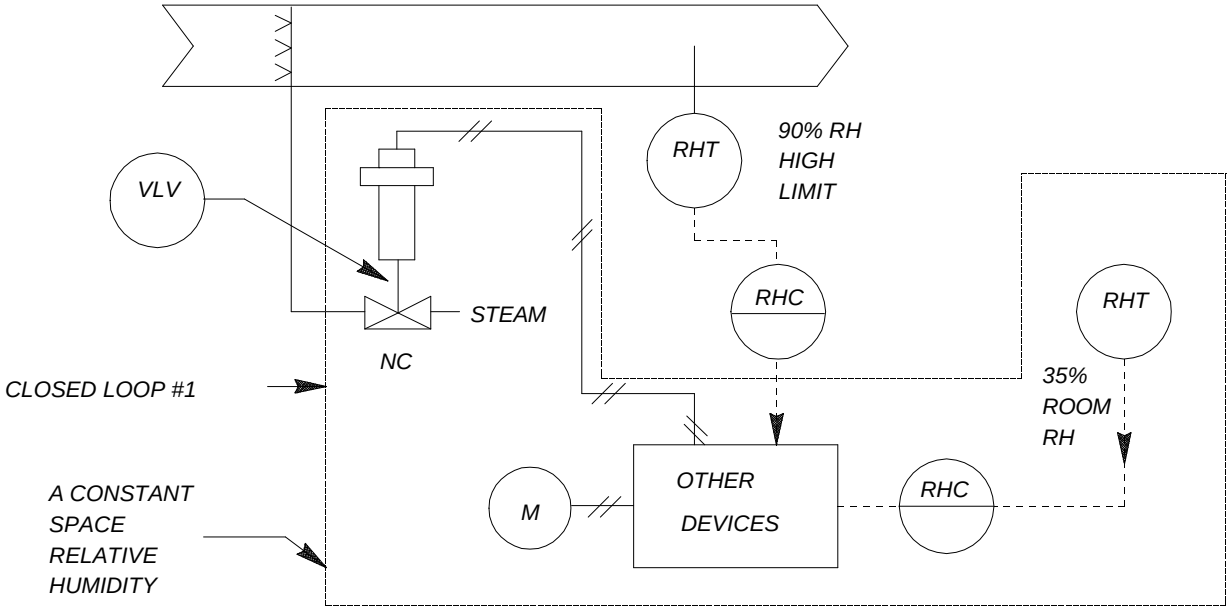

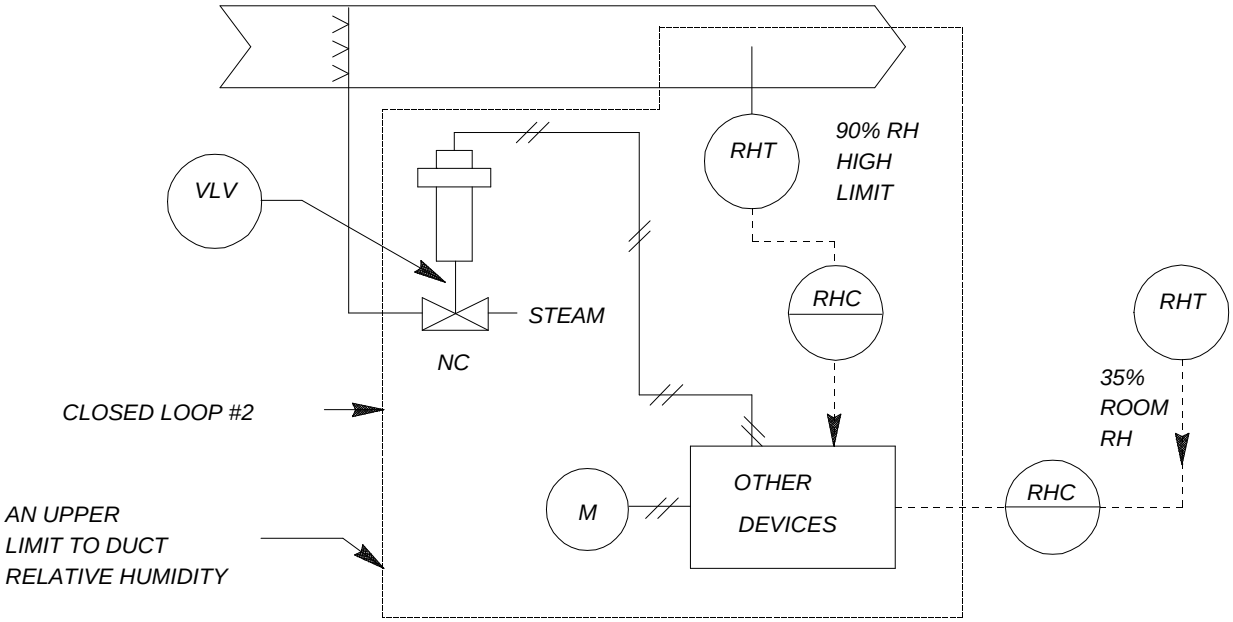

Figure 2-10. Two loops controlling one device (humidity control with high limit).

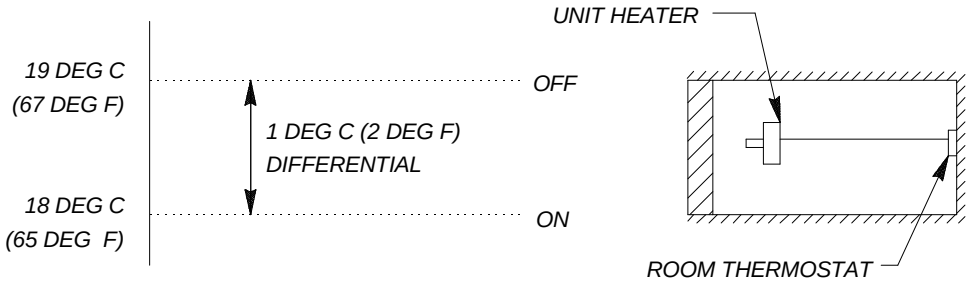

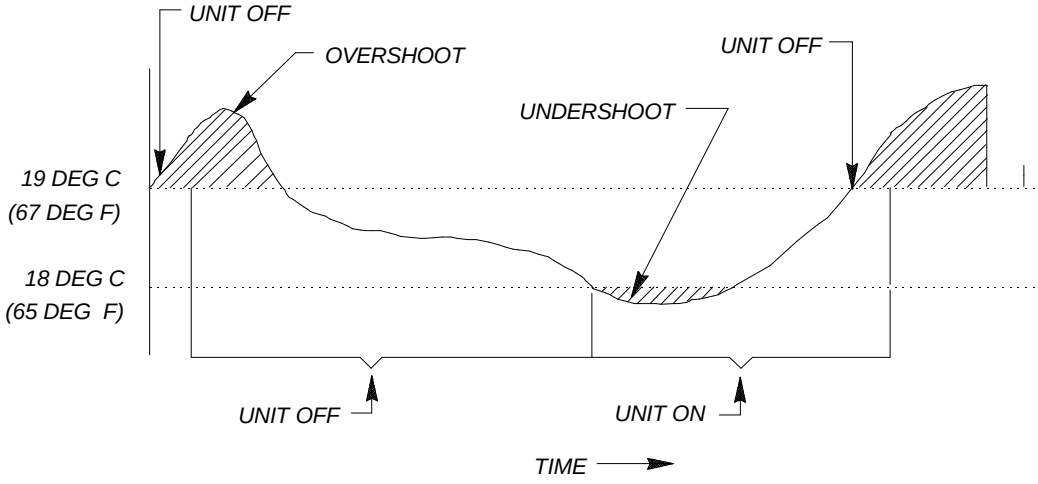

Figure 2-11. Two-position control.

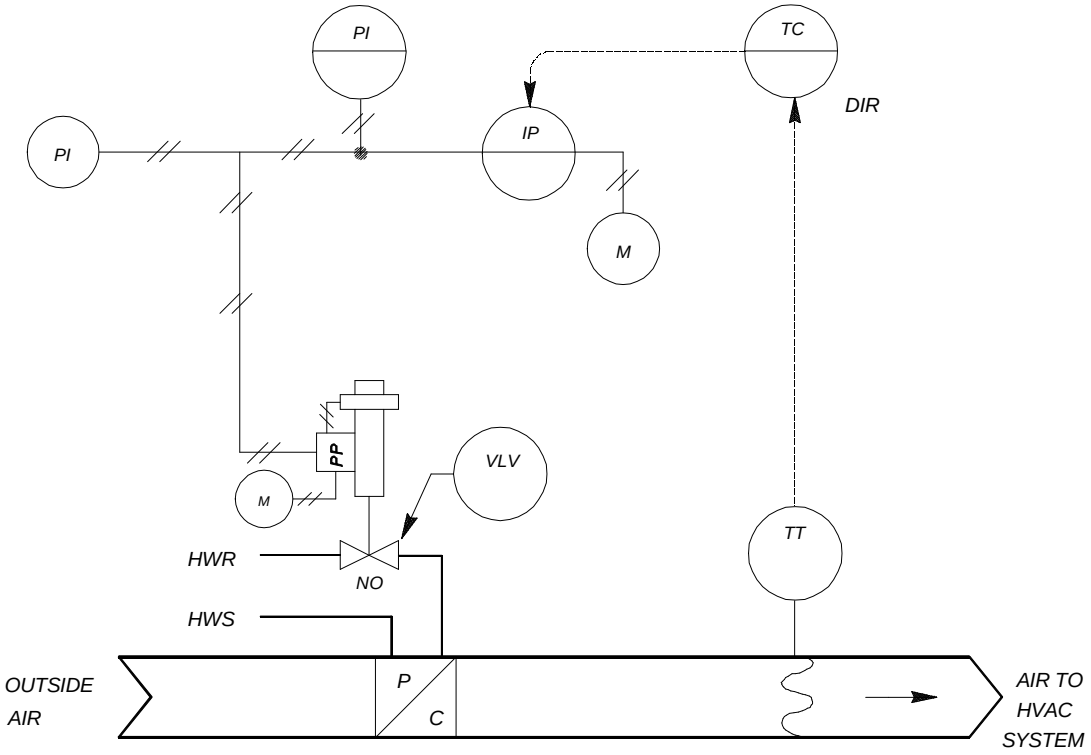

Figure 2-12. Simple control loop applied to outside air heating.

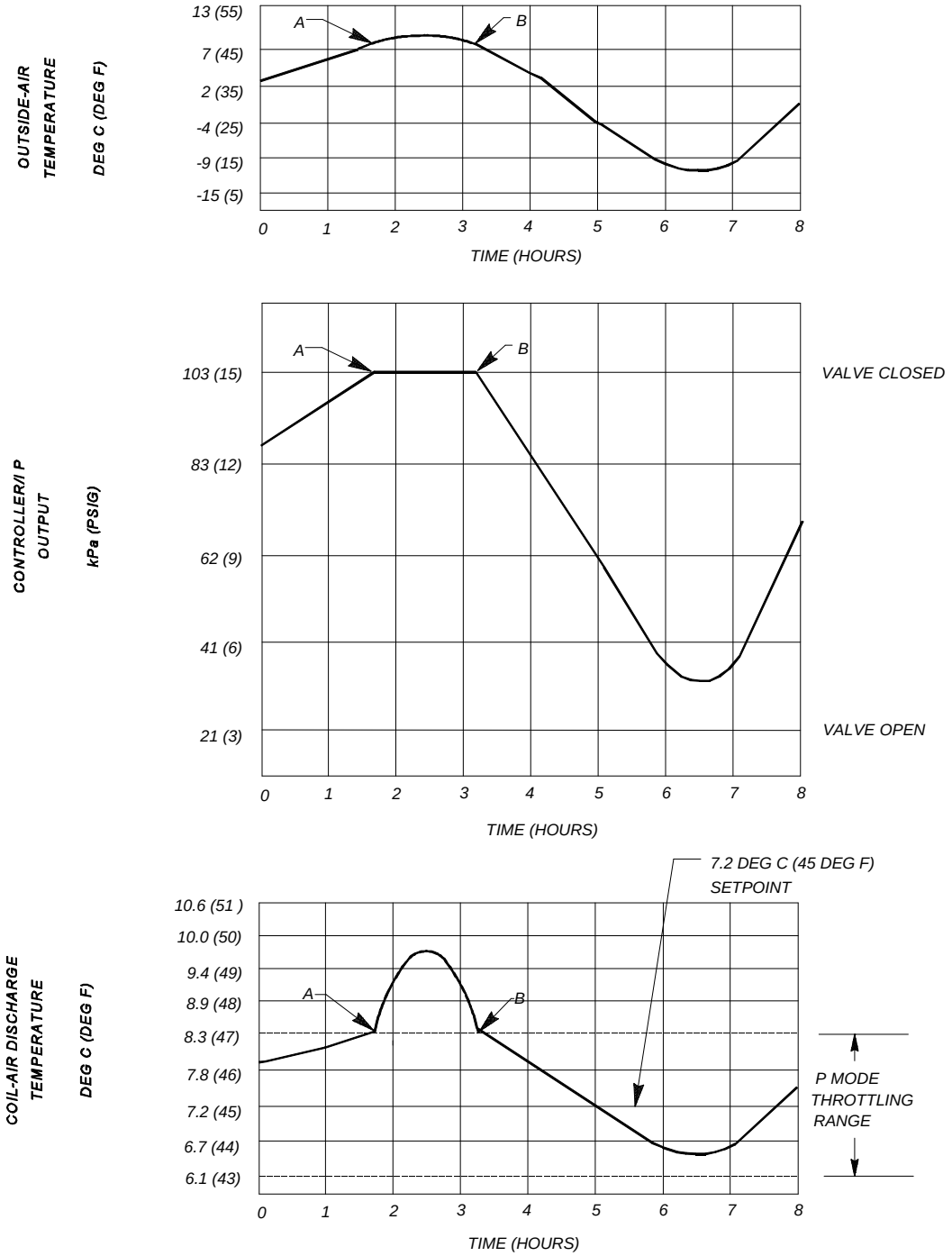

Figure 2-13. Proportional control mode.

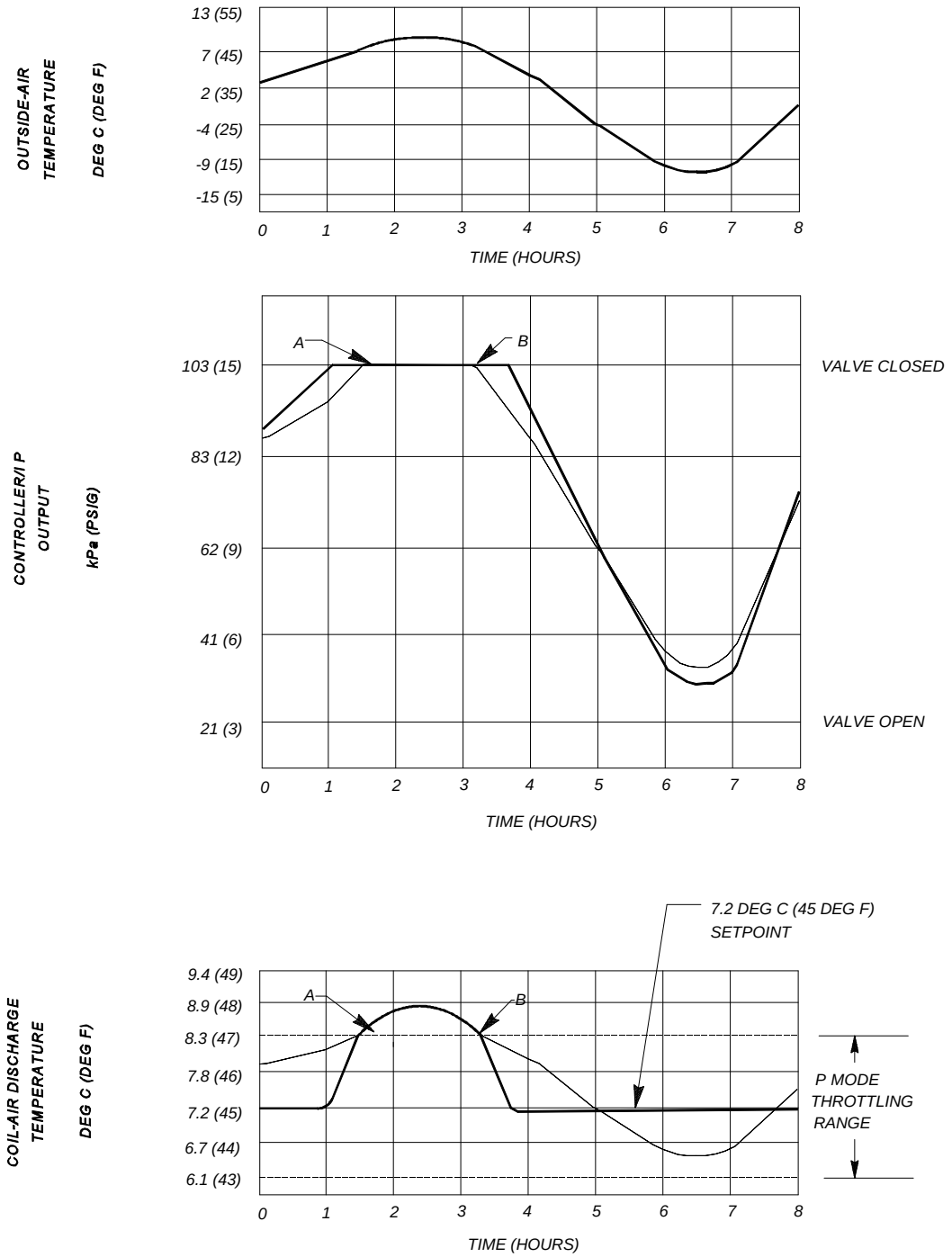

Figure 2-14. Proportional plus integral control mode.

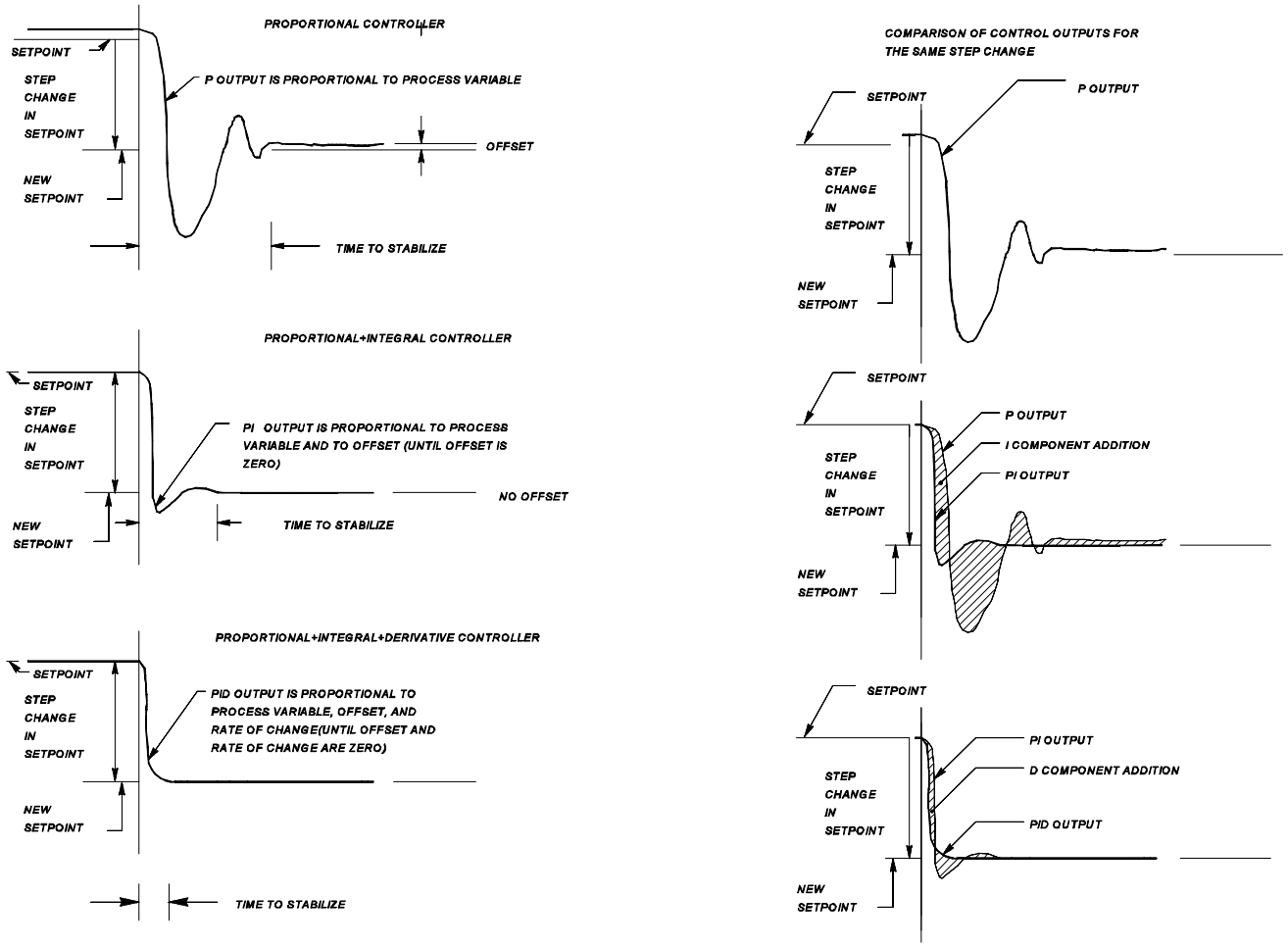

Figure 2-15. Comparison of P mode, PI mode, and PID mode for a step change in setpoint, and the contributions of each mode to controller output signal.

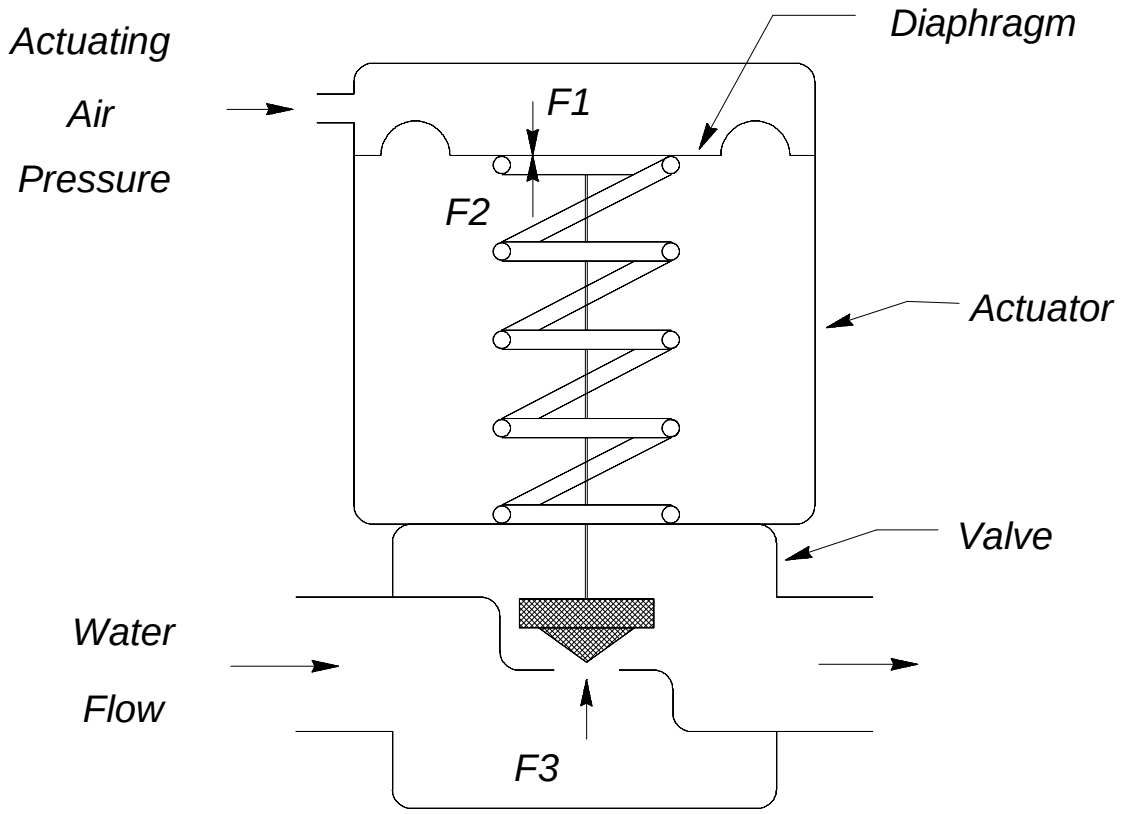

Figure 2-16. Typical normally-open pneumatic valve.

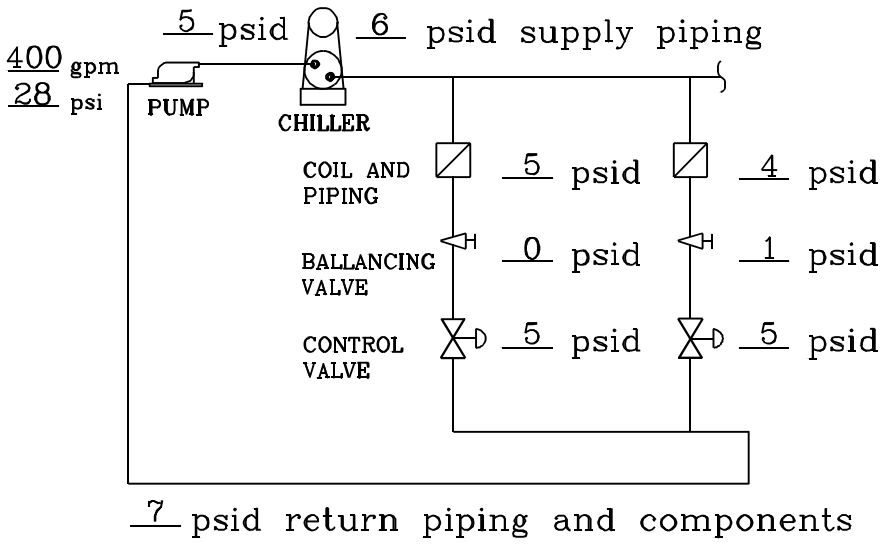

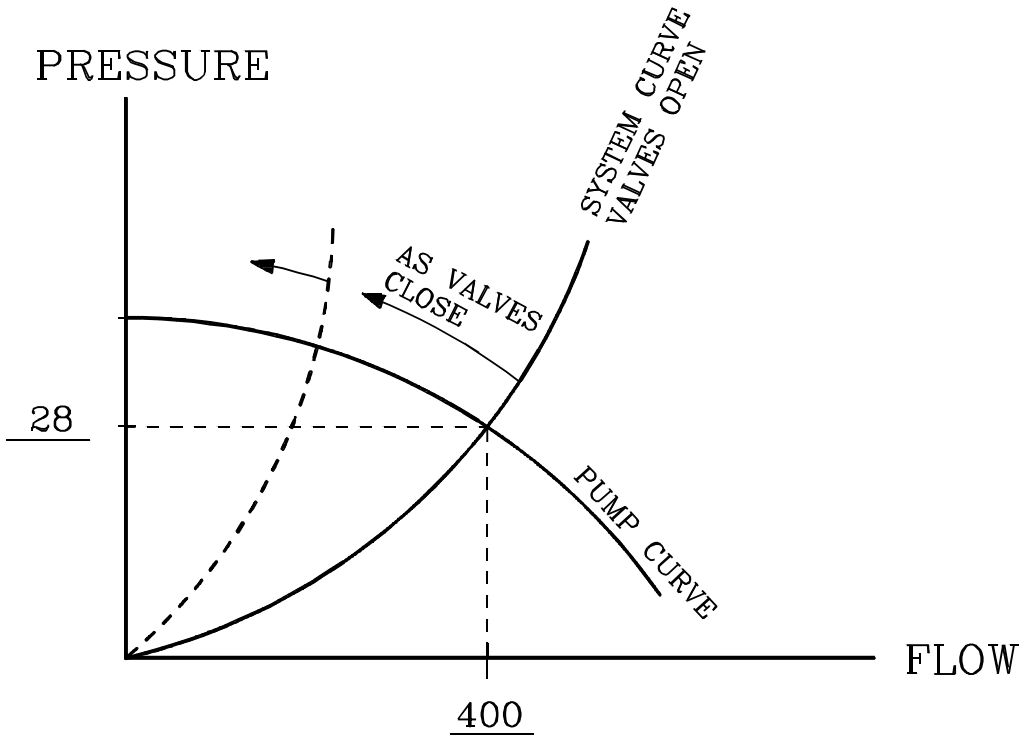

Figure 2-17. Close-off pressure for two-way valves.

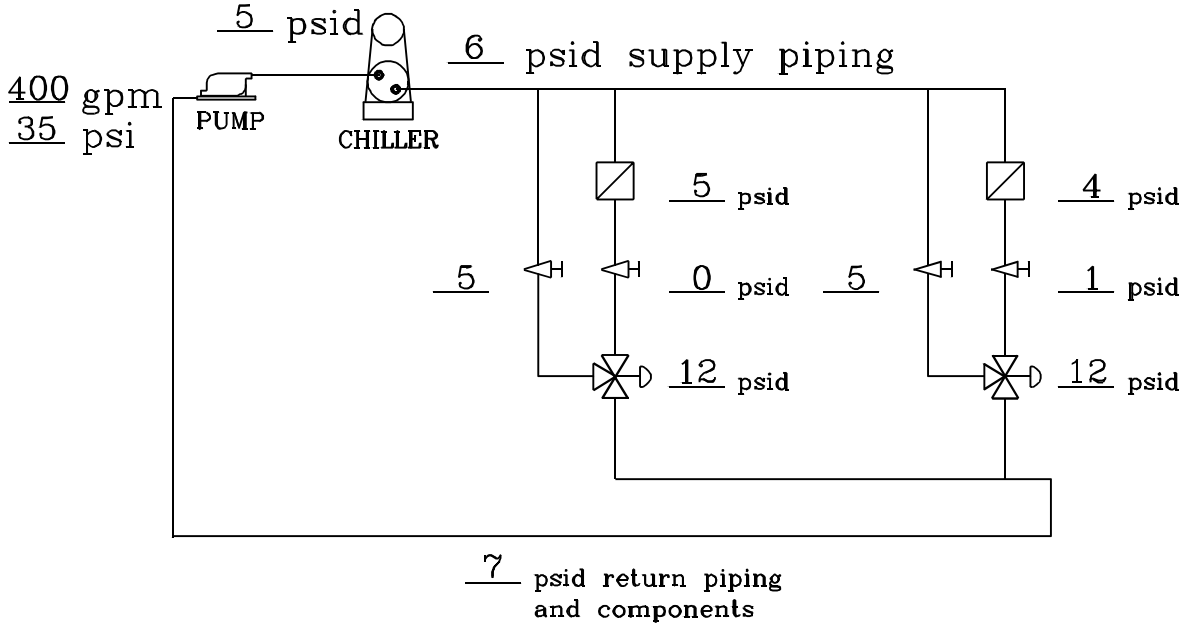

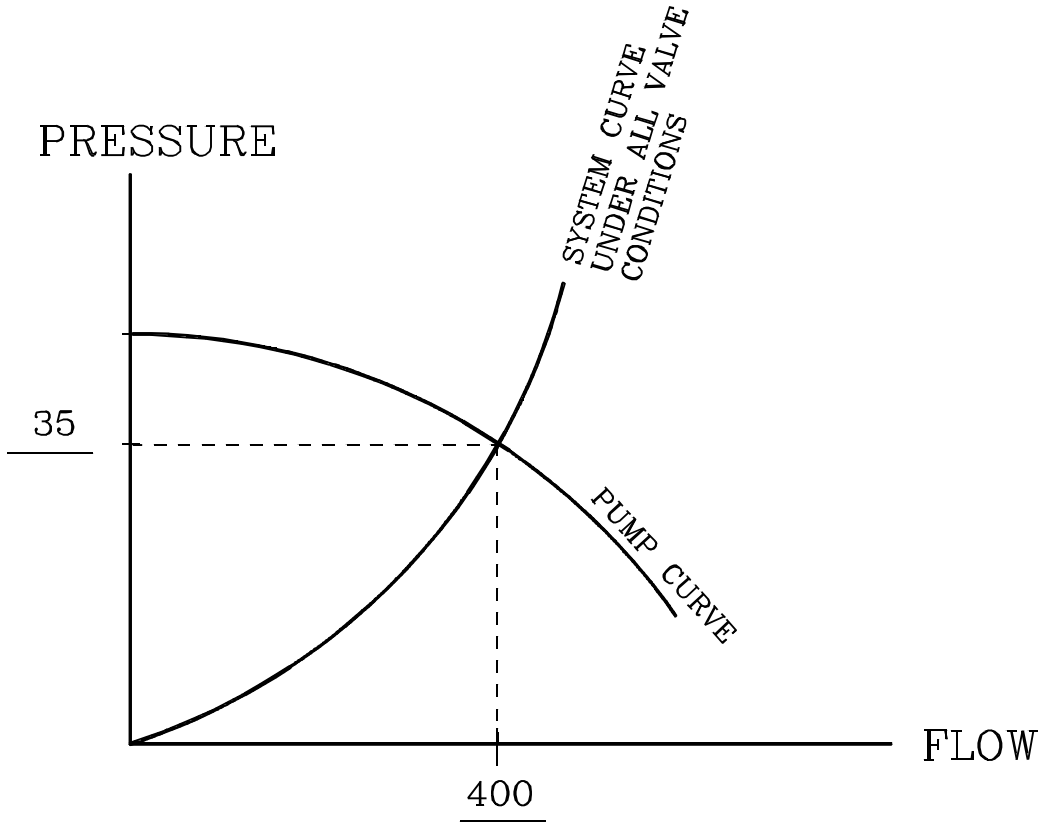

Figure 2-18. Close-off pressure for three-way valves.