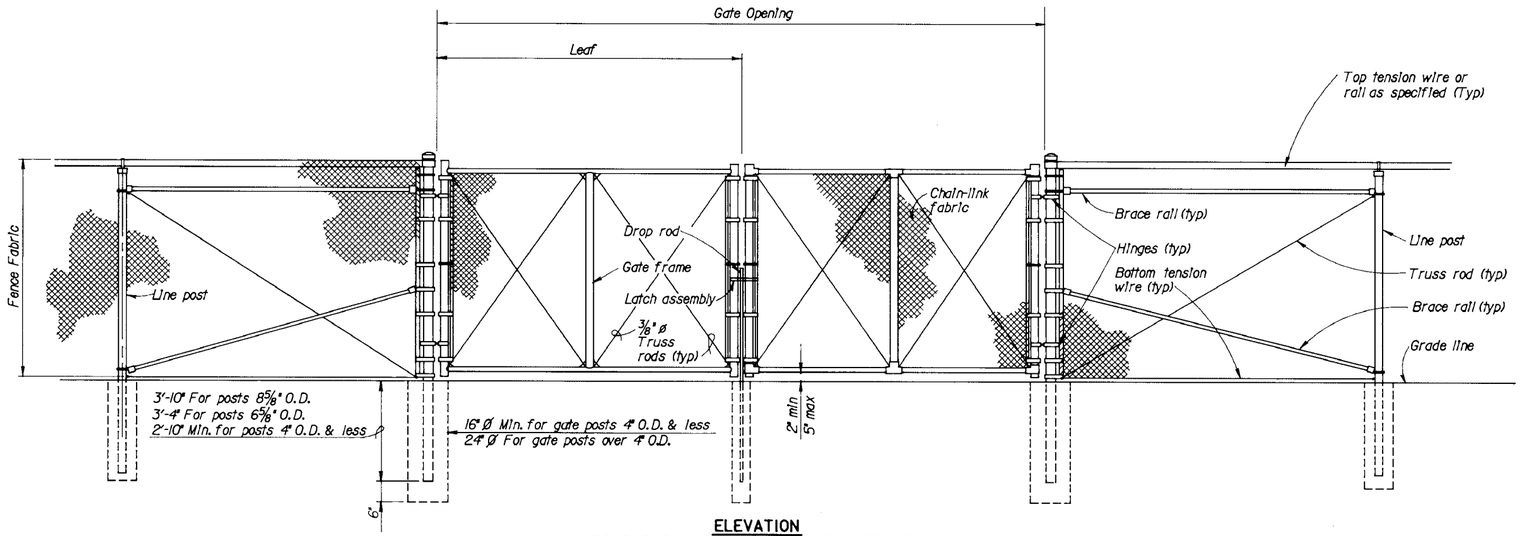

ELEVATION
DOUBLE SWING GATE (TYPE FE5 FENCE)

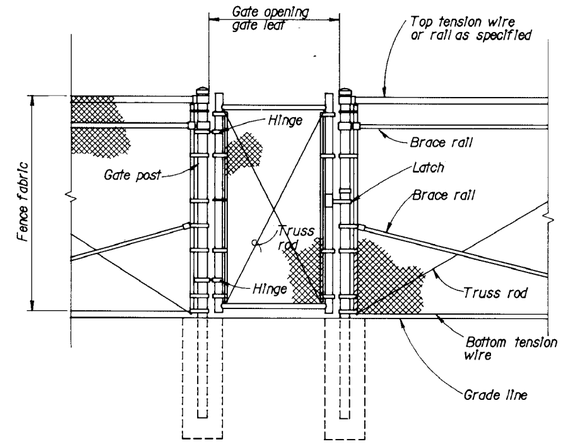

PERSONNEL GATE
TYPE FE5 FENCE

NOTES:
1. Details shown are to clarify requirements and are not intended to limit other type of fence sections and methods of installation.
2. Swing Gates shall be constructed with drop rods, padlocks, latch assembly and gate keepers except as noted.
3. All gate frames shall be a minimum 1.90" nominal (round) or 2.00" nominal (square). Gate frames shall be of welded construction or shall be assembled using heavy fittings. At Contractor's option a welded horizontal brace may be used in lieu of truss rods to brace all welded gate frames. The Contractor shall be responsible for the proper rigid construction of all gates supplied.
4. Gates shall be designated as follows:
   Fence Type - FE5, FE6, etc.
   Fence Height - inches
   Type Opening - SO (single)
   - DO (double)
   Hinge - RA (standard)
   - HO (offset)
   Opening - Feet (clear opening between gate posts)
   EXAMPLES: FE6-84-DO-RA-24
   FE5-48-SO-HO-6

GATE POST SCHEDULE	
GATE LEAF WIDTH (NOMINAL)	OUTSIDE DIMENSION (NOMINAL)
6' or less	2.875" OD 2.5" SQ
More than 6' to 13'	4.0" OD
More than 13' to 18'	6.625" OD
More than 18'	8.625" OD

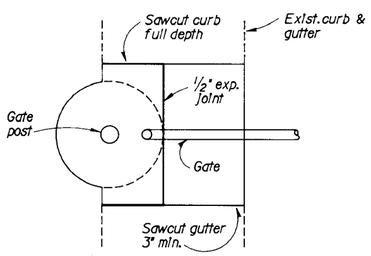

PLAN

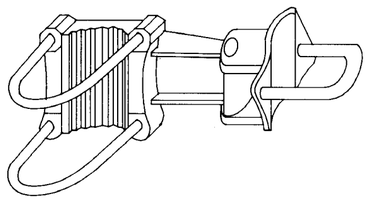

OFFSET HINGE

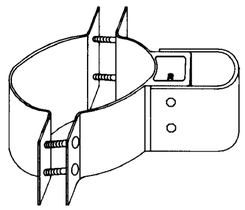

STANDARD HINGE

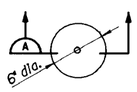

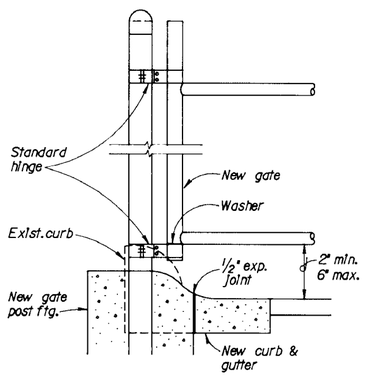

SECTION
GATE POST DETAIL
AT CURB AND GUTTER
NO SCALE

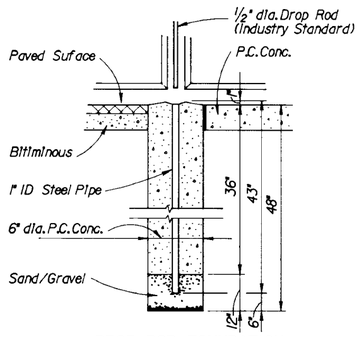

DROP ROD FOUNDATION

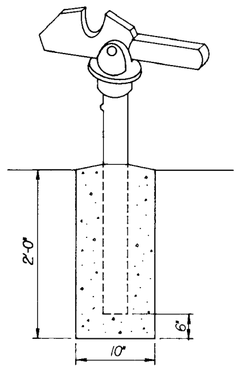

GATE KEEPER
(TO HOLD GATE OPEN)

SWING GATE DETAILS
NO SCALE

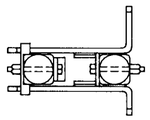

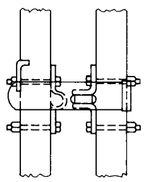

LATCH
ASSEMBLY

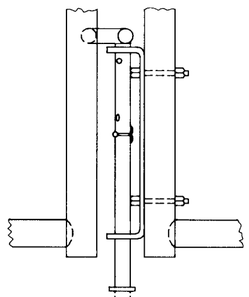

DROP ROD
ASSEMBLY

THINK VALUE ENGINEERING

Revisions

Symbol	Descriptions	Date	Approved

U.S. ARMY ENGINEER DISTRICT
CORPS OF ENGINEERS
OMAHA, NEBRASKA

Designed by: JWE/JAVH
Drawn by: A.S.G.
Checked by: JAVH
Reviewed by: JWE
Approved by: Chief, CIVIL Section

FE5 CHAIN-LINK FENCE GATE DETAILS

Scale: As Shown
Plot Scale Ratio: 1:1
Design File: CIVL:SGATE
Date: MAY 1992
Spec. No.:
Contract No.:
Sheet reference number: 1
Drawing Code: STD 872-90-07

COMPUTER AIDED DESIGN & DRAFTING

THIS DWG SUPERSEDES DWG 40-16-08
TO BE USED IN CONJUNCTION WITH 872-90-SERIES