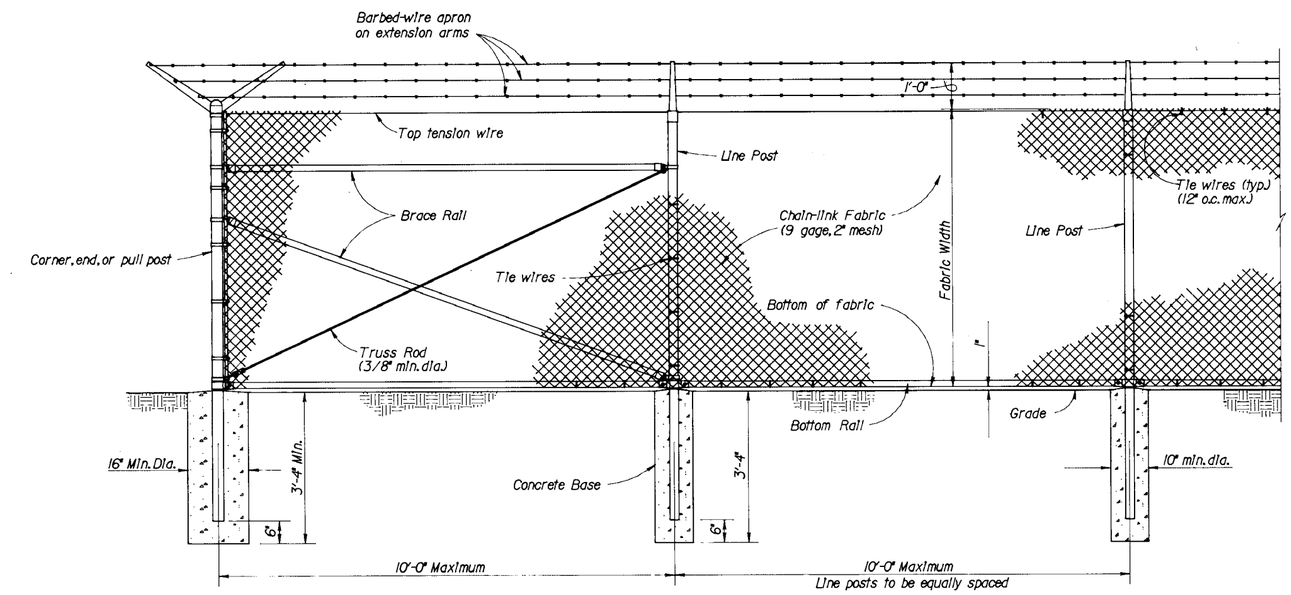

CHAIN-LINK SECURITY FENCE DETAIL

NO SCALE

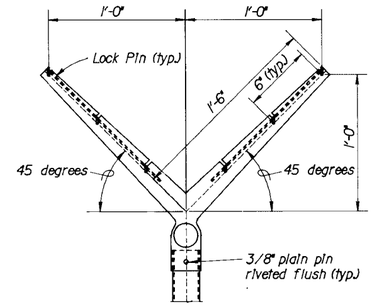

LINE POST

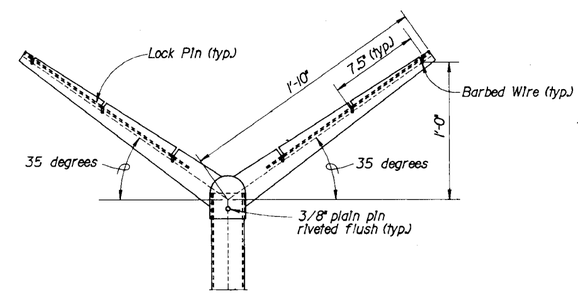

CORNER POST

EXTENSION ARM DETAILS

NO SCALE

STEEL POST SCHEDULE			
USE AND SECTION	MINIMUM OUTSIDE DIMENSIONS (NOMINAL)		
	FABRIC LESS THAN 72"	FABRIC 72" TO 96"	FABRIC OVER 96"
Corner, End & Pull Posts			
Tubular - Round	2.375" O.D.	2.875" O.D.	4.00" O.D.
Line Posts			
Tubular - Round	1.90" O.D.	2.375" O.D.	2.875" O.D.
Bottom & Brace Rails			
Tubular - Round	1.66" O.D.		
Tubular - Square	1.50" O.D.		
H-Section	1.625" x 1.50"		
C-Section (Roll-Formed)	1.625" x 1.25"		

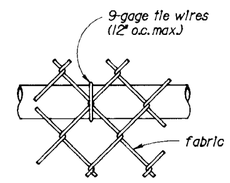

BRACE RAIL ATTACHMENT

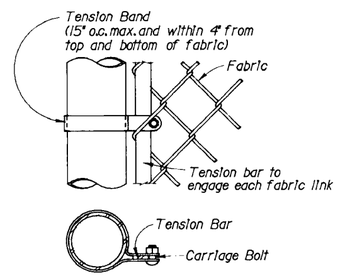

END OR GATE POST DETAIL

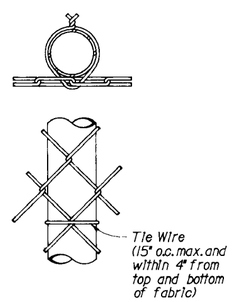

LINE POST ATTACHMENTS

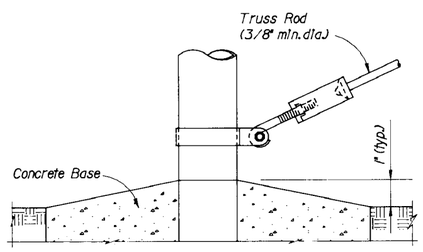

TRUSS ROD AND BAND

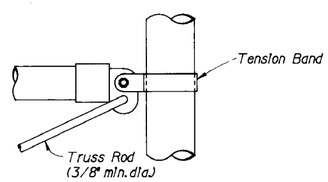

BRACE RAIL CLAMP DETAIL

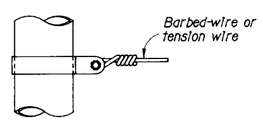

TENSION BAND DETAIL

FASTENING DETAILS

NO SCALE

NOTES:

1. Wire ties, rails, posts, and braces shall be constructed on the secure side of the fence alignment. Chain-link fabric shall be placed on the opposite side of the secure area.
2. Only 9-gage galvanized steel tie wires shall be used for fastening the fence fabric to fence posts, rails and tension wires. Hog rings shall not be allowed.
3. Bottom rail shall be attached to double rail ends using 3/8" carriage bolts as shown. Additional holes shall be drilled in manufacturers standard double rail ends to insure that carriage bolts pass through the bottom rail as shown.

FENCE LEGEND:

Type FE5 - Chain-Link Fence Without barbed-wire apron
Type FE6 - Chain-Link Fence w/barbed-wire on single outrigger
Type FE7 - Chain-Link Fence w/barbed wire on double outrigger
Type FE8 - Chain-Link Fence w/barbed-wire and barbed-tape on double outrigger
TR - Fence with top rail and tension wire at bottom
TBR - Fence with top and bottom rails
TWB - Tension wire top and bottom
TWBR - Fence with top tension wire and bottom rail
Final number is fabric width in inches.

Examples:

FE6-TR-72 - Chain-Link security fence with barbed-wire on single outrigger, top rail, and 72 inch fabric width.
FE5-TWB-48 - Chain-Link security fence with no apron, top and bottom tension wire, and 48 inch fabric width.

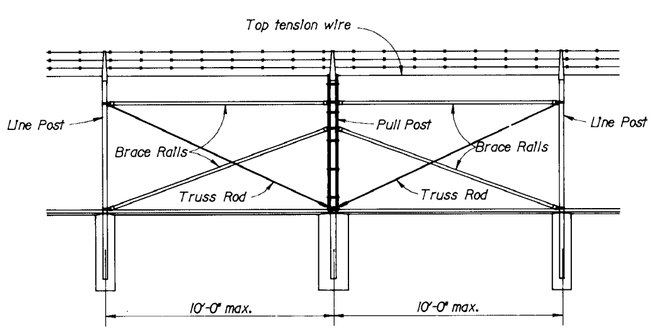

BRACE PANEL DETAIL

NO SCALE

NOTE:
Provide brace panel whenever straight runs exceed 500 feet.

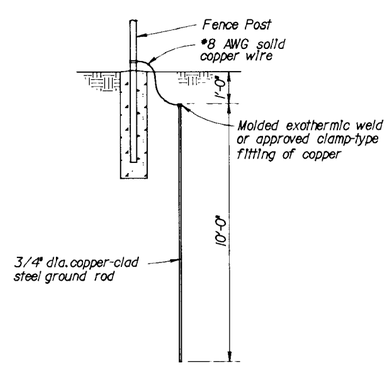

GROUNDING DETAIL

NO SCALE

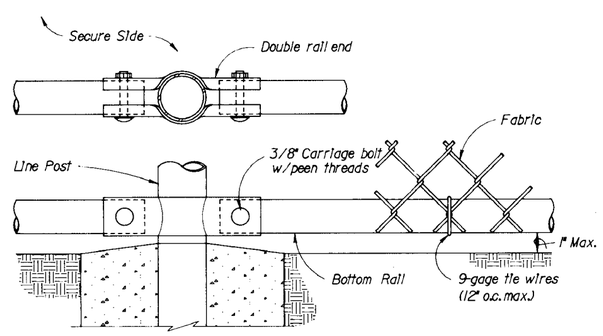

BOTTOM RAIL DETAILS

NO SCALE

THINK VALUE ENGINEERING

Revisions

Symbol	Descriptions	Date	Approved

U.S. ARMY ENGINEER DISTRICT
CORPS OF ENGINEERS
OMAHA, NEBRASKA

Designed by: JWE/JAVH
Drawn by: D.J.K.
Checked by: JAVH
Reviewed by: JWE
Approved by: Chief, CIVIL Section

FE7 CHAIN-LINK SECURITY FENCE DETAILS FOR SENSORED FENCE

Scale: As Shown
Plot Scale Ratio: 1:1
Design File: CIVL:FE7FEN2
Date: MAY 1992
Spec. No.:
Contract No.:
Sheet reference number: 1
Drawing Code: STD 872-90-05

COMPUTER AIDED DESIGN & DRAFTING

THIS DWG SUPERSEDES DWG 40-16-08