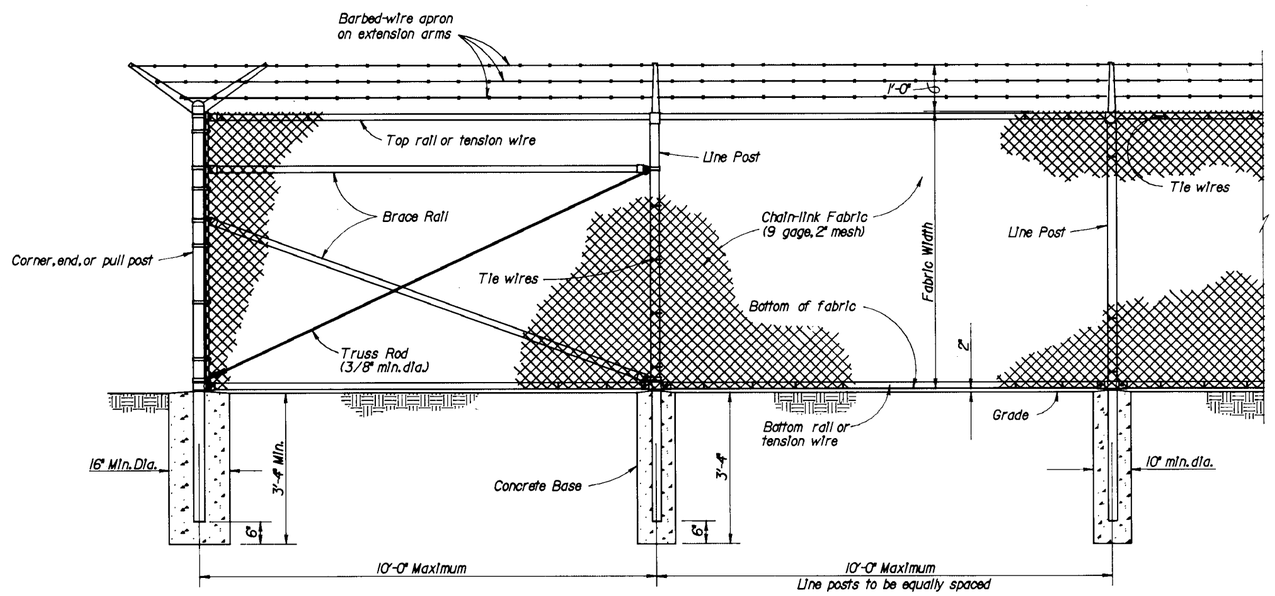

CHAIN-LINK SECURITY FENCE DETAIL

NO SCALE

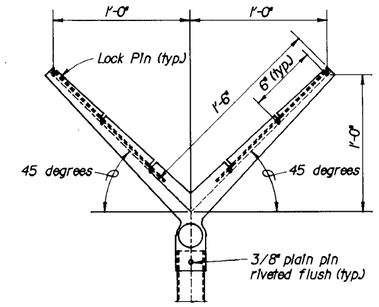

LINE POST

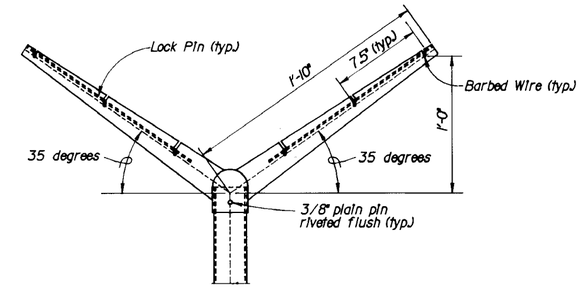

CORNER POST

EXTENSION ARM DETAILS

NO SCALE

STEEL POST SCHEDULE			
USE AND SECTION	MINIMUM OUTSIDE DIMENSIONS (NOMINAL)		
	FABRIC LESS THAN 72"	FABRIC 72" TO 96"	FABRIC OVER 96"
Corner, End & Pull Posts			
Tubular - Round	2.375" O.D.	2.875" O.D.	4.00" O.D.
Tubular - Square	2.00" SQ.	2.50" SQ.	3.00" SQ.
C-Section (Roll-Formed)	3.50" x 3.50"	3.50" x 3.50"	———
Line Posts			
Tubular - Round	1.90" O.D.	2.375" O.D.	2.875" O.D.
H-Section	2.25" x 1.70"	2.25" x 1.70"	2.25" x 1.70"
C-Section (Roll-Formed)	1.875" x 1.625"	2.25" x 1.70"	———
Top, Bottom & Brace Rails			
Tubular - Round	1.66" O.D.		
Tubular - Square	1.50" O.D.		
H-Section	1.625" x 1.50"		
C-Section (Roll-Formed)	1.625" x 1.25"		

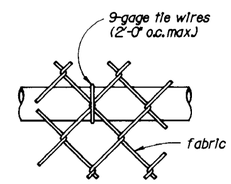

TOP OR BRACE RAIL ATTACHMENT

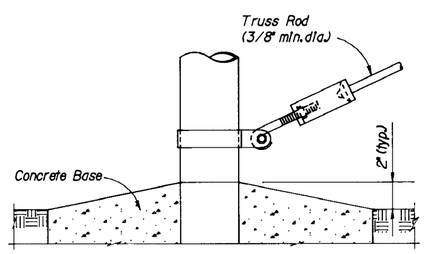

TRUSS ROD AND BAND

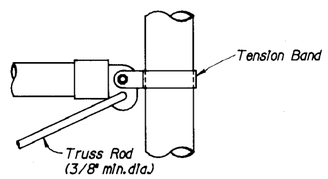

ROUND POST

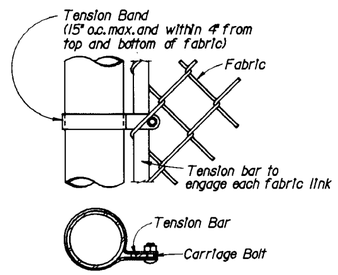

END OR GATE POST DETAIL

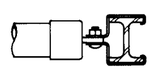

H-BEAM

BRACE RAIL CLAMP DETAILS

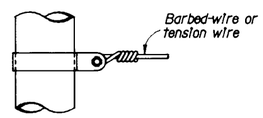

TENSION BAND DETAIL

FASTENING DETAILS

NO SCALE

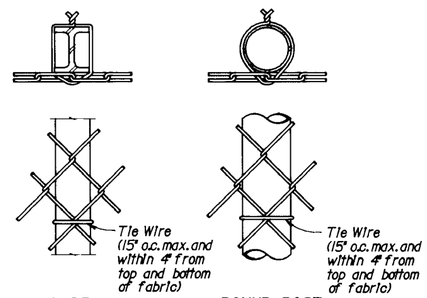

H-BEAM ROUND POST

LINE POST ATTACHMENTS

NOTES:

1. Details shown are to clarify requirements and are not intended to limit other types of fence sections and methods of installation.
2. Wire ties, rails, posts, and braces shall be constructed on the secure side of the fence alignment. Chain-link fabric shall be placed on the opposite side of the secure area.
3. C-section posts shall be installed so that the void inside the post is completely filled with concrete up to the top of the foundation.
4. Bottom rail shall be attached to double rail ends using 3/8" carriage bolts as shown.

rail as shown.

FENCE LEGEND:

Type FE5 - Chain-Link Fence Without barbed-wire apron
Type FE6 - Chain-Link Fence w/barbed-wire on single outrigger
Type FE7 - Chain-Link Fence w/barbed wire on double outrigger
Type FE8 - Chain-Link Fence w/barbed-wire and barbed-tape on double outrigger
TR - Fence with top rail and tension wire at bottom
TBR - Fence with top and bottom rails
TWB - Tension wire top and bottom
TWBR - Fence with top tension wire and bottom rail
Final number is fabric width in inches.

Examples:

FE6-TR-72 - Chain-Link security fence with barbed-wire on single outrigger, top rail, and 72 inch fabric width.
FE5-TWB-48 - Chain-Link security fence with no apron, top and bottom tension wire, and 48 inch fabric width.

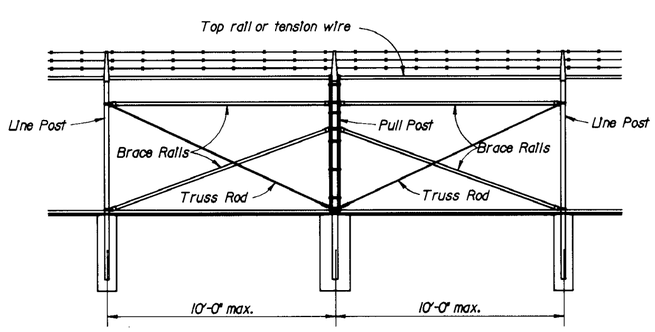

BRACE PANEL DETAIL

NO SCALE

NOTE:
Provide brace panel whenever straight runs exceed 500 feet.

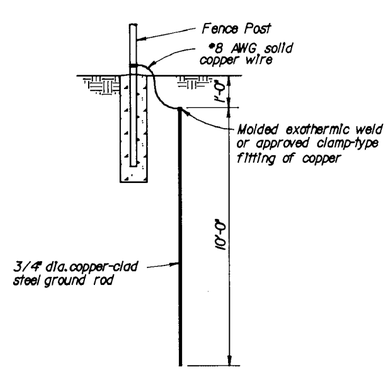

GROUNDING DETAIL

NO SCALE

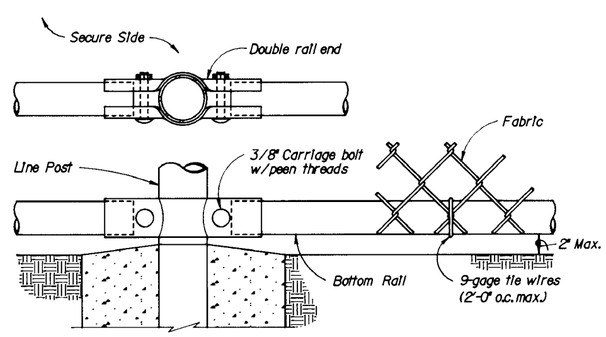

BOTTOM RAIL DETAILS

NO SCALE

Symbol	Descriptions	Date	Approved
	Revisions		

THINK VALUE ENGINEERING

U.S. ARMY ENGINEER DISTRICT
CORPS OF ENGINEERS
OMAHA, NEBRASKA

Designed by: JWE/JAVH
Drawn by: D.J.K.
Checked by: JAVH
Reviewed by: JWE
Approved by: Chief CIVIL Section

COMPUTER AIDED DESIGN & DRAFTING

FE7 CHAIN-LINK SECURITY FENCE DETAILS FOR NON-SENSORED FENCE

Scale: As Shown
Plot Scale Ratio: 1:1
Design File: CIVLPETFEN1
Date: MAY 1992
Spec. No.:
Contract No.:
Sheet reference number: 1
Drawing Code: STD 872-90-04

THIS DWG SUPERSEDES DWG 40-16-08