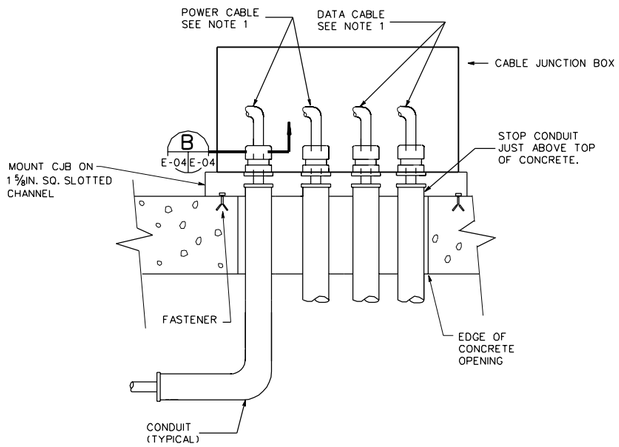

SECTION (A E-04 E-04)
N.T.S.

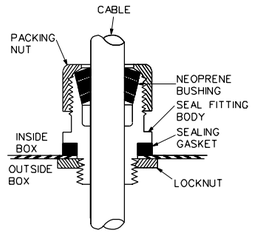

SECTION-CABLE SEAL-FITTING (B E-04 E-04)
N.T.S.

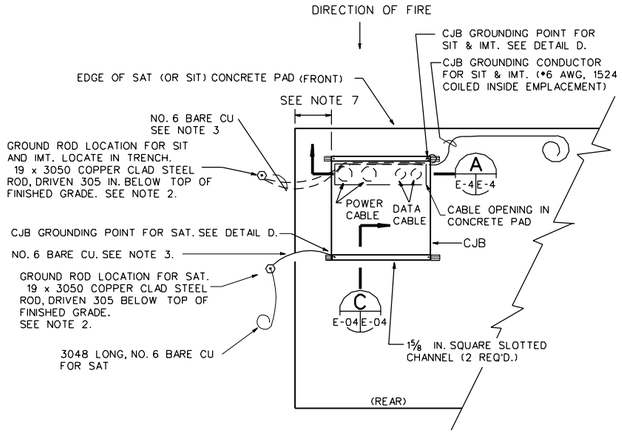

DETAIL-CJB MOUNTING IN EMPLACEMENTS (1 E-04 E-04)
N.T.S. SEE NOTE 9.

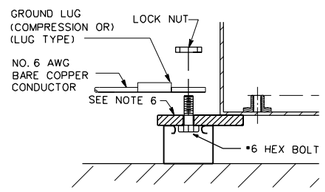

DETAIL- CJB GROUNDING (2 E-04 E-04)
N.T.S.

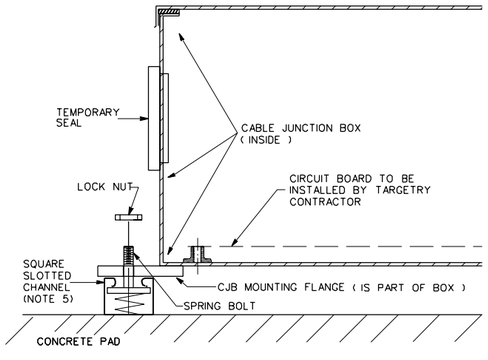

SECTION (C E-04 E-04)
N.T.S.

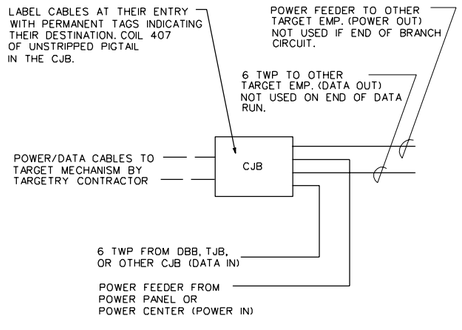

CJB BLOCK DIAGRAM
(FUNCTIONAL RELATIONSHIPS)

NOTES:

1. COIL 407 OF SLACK POWER AND DATA CABLES IN THE CJB. PROVIDE CABLE TAG ADJACENT TO THE SEAL FITTNG, SHOWING CABLE DESTINATION OR SOURCE. WRITTEN IN BOTTOM OF BOX WITH PERMANENT INK. EXAMPLE: SIT1(OUT), ETC.
2. EXOTHERMICALLY WELD CONDUCTOR TO GROUND ROD. DRIVE GROUND ROD 305 BELOW TOP OF FINISHED GRADE.
3. TERMINATE NO. 6 BARE STRANDED CU GROUNDING CONDUCTOR TO CJB MOUNTING BOLT. COIL ONE NO. 6 BARE STRANDED CU GROUND CONDUCTOR 1524.
4. ONLY ONE CABLE SHALL BE ROUTED THROUGH EACH PENETRATION ENTERING A CJB. THE LARGEST POWER CONDUCTOR PERMITTED IN A CJB IS NO. 2 AWG.
5. IF ANGLE-IRON PLATFORM IS USED, DISREGARD SQUARE SLOTTED CHANNEL & SPRING BOLT.
6. REMOVE PAINT FROM FLANGE: COAT WITH AN ELECTRICALLY CONDUCTIVE, OXIDE-INHIBITING COMPOUND.
7. CJB SHALL BE INSTALLED SUCH THAT THERE IS A MINIMUM OF 50 AND A MAXIMUM OF 76 BETWEEN THE EDGE OF THE EMPLACEMENT WALL OR CONCRETE PAD AND THE SIDE OF THE CJB.
8. DIMENSIONS AND CORRECT INSTALLATION OF THIS ITEM ARE CRITICAL. THIS IS A TARGET INTERFACE ITEM.
9. THIS DETAIL DEPICTS INSTALLATION OF THE CJB IN SIT, SAT, AND IMT TARGET EMPLACEMENTS ONLY.

US Army Corps of Engineers

Symbol	Description	Symbol	Description	Date	Approved	Date	Approved

Designed by: N/A
Dwn by: JTP
Ckd by: MLR
Reviewed by: WLS
Submitted by: RNM
Date: 01 APR 98
Rev.
Design file no.
Drawing code: STD 179-00-01
File name: STDE04.DGN
Plot date: 20 MAR 98
Plot scale: FULL

U. S. ARMY ENGINEERING AND SUPPORT CENTER, HUNTSVILLE
HUNTSVILLE, ALABAMA

FORCE XXI/FORCE MODERNIZATION PROGRAM
STANDARD DESIGN

CABLE JUNCTION BOX
INSTALLATION DETAILS

Sheet reference number:
E-04
Sheet of