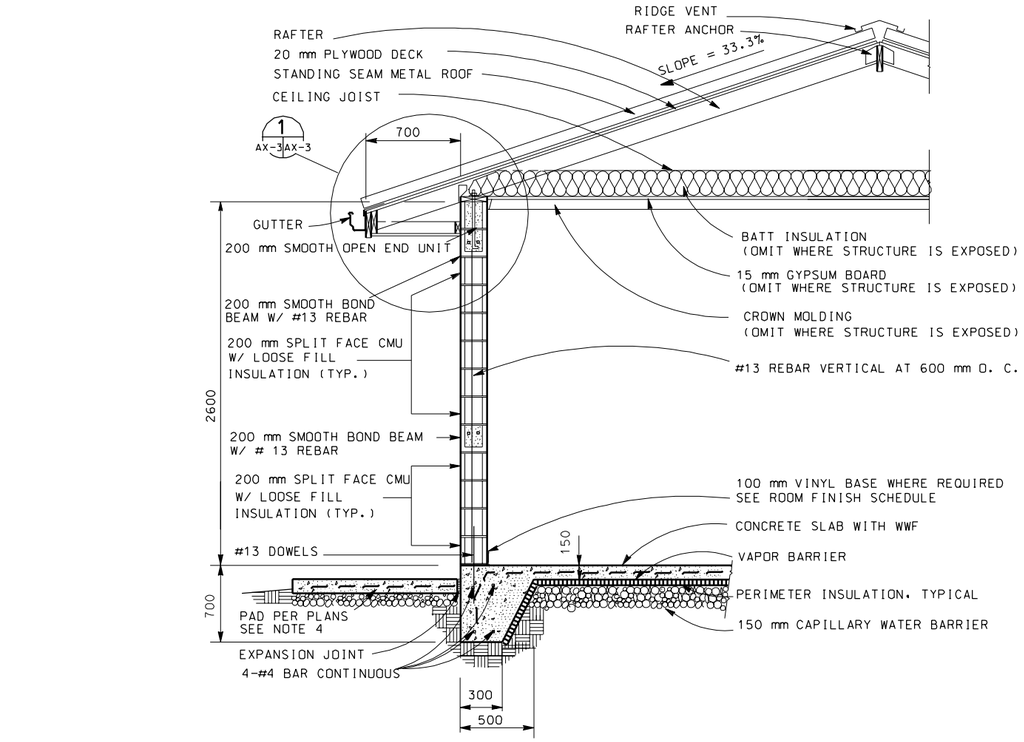

SECTION A
SCALE : 1 : 20
NOTE 1 AX-03

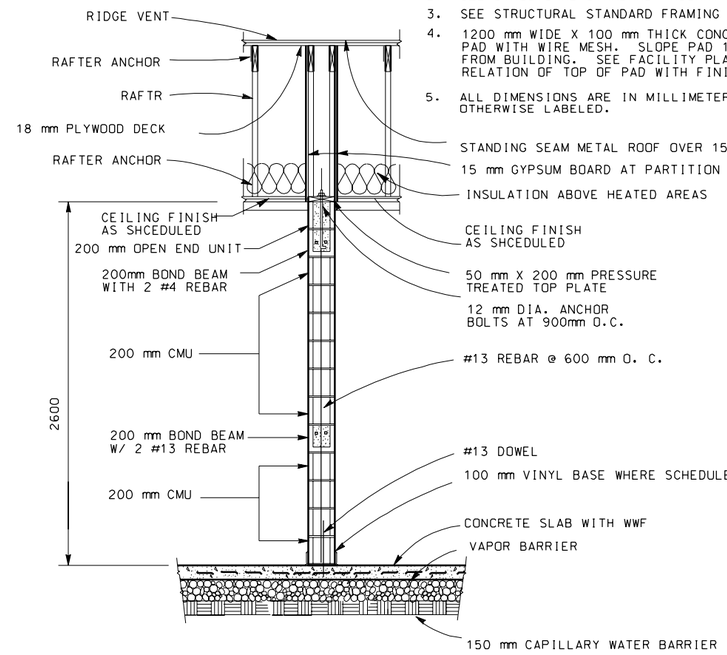

NOTES

1. SEE FACILITY PLANS FOR SECTION APPLICATIONS.
2. SEE STRUCTURAL STANDARD MASONRY SHEET FOR DETAILS.
3. SEE STRUCTURAL STANDARD FRAMING SHEET FOR DETAILS.
4. 1200 mm WIDE X 100 mm THICK CONCRETE PAD WITH WIRE MESH. SLOPE PAD 1% AWAY FROM BUILDING. SEE FACILITY PLAN FOR RELATION OF TOP OF PAD WITH FINISH FLOOR.
5. ALL DIMENSIONS ARE IN MILLIMETERS UNLESS OTHERWISE LABELED.

SECTION B
SCALE : 1 : 20
NOTE 1 AX-03

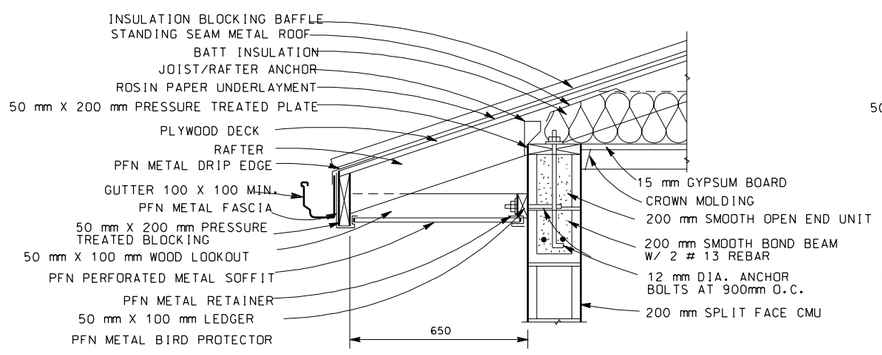

DETAIL 1
SCALE : 1 : 50
NOTE 1 AX-03

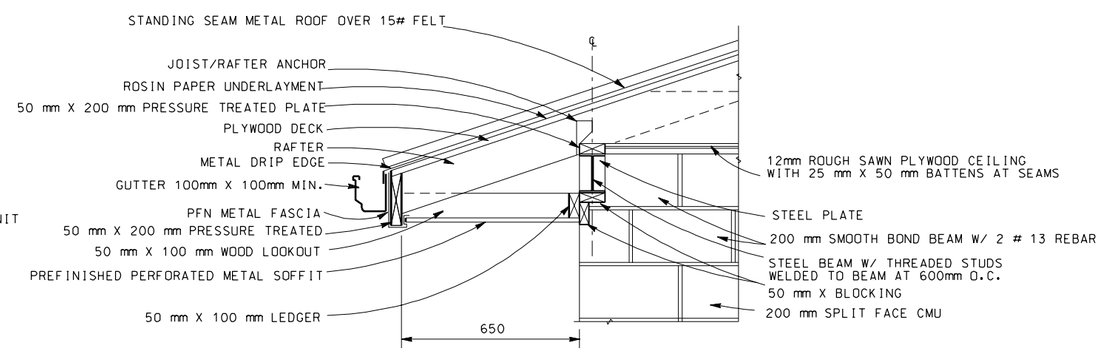

DETAIL 2
SCALE : 1 : 10
NOTE 1 AX-03

GRAPHIC SCALES

1:20 — 500 0 500 1000

1:10 — 250 0 500

US Army Corps of Engineers

Symbol	Description	Date	Approved	Symbol	Description	Date	Approved

Designed by: Dwn by: LM Ckd by: LM Date: 01 APR 98 Rev.
Reviewed by: RR Drawing code: STD 171-00-01 Design file no.
Submitted by: RR File name: 3 STDAX03.DGN Plot date: 20 MAR 98 Plot scale: FULL

U. S. ARMY ENGINEERING AND SUPPORT CENTER, HUNTSVILLE
HUNTSVILLE, ALABAMA

FORCE XXI/FORCE MODERNIZATION PROGRAM
STANDARD DESIGN

WALL SECTIONS AND DETAILS (MASONRY CONSTRUCTION)

Sheet reference number:
AX-03
Sheet of