PART 6. MECHANICAL DETAILS

Table of Contents

Name of Drawing or Detail — Page

RTD Installation – Small Piping (Detail M-1) ... B-38
RTD Installation – Large Piping (Detail M-2) ... B-38
Duct Point Temperature Instrument Installation (Detail M-3) ... B-38
Duct-Mounted Temperature Sensor Installation (Detail M-4) ... B-38
Space RTD Mounting (For Finished Interiors) (Detail M-5) ... B-38
Space RTD Mounting (For Unfinished Interiors) (Detail M-6) ... B-38
Fan Air Flow Switch Installation (Detail M-7) ... B-39
Air Filter Differential Pressure Switch Installation (Detail M-8) ... B-39
Duct Relative Humidity Instrument Installation (Detail M-9) ... B-39
Differential Pressure Switch, Liquid Installation (Detail M-10) ... B-39
Installation of Pressure Transmitter (Detail M-11) ... B-39
Installation of Pressure Switch (Detail M-12) ... B-39
Terminal Box Controller (Detail M-13) ... B-40
Differential Pressure Switch for Instrument Air Filter (Detail M-14) ... B-40
Outdoor Temperature Sensor with Sunshield (Detail M-15) ... B-40
Damper Position Indication Potentiometer Installation Details Outside Duct Mounting (Detail M-16) ... B-40
Flow Meter, Venturi (Delta-P) (Detail M-17) ... B-40
Flow Meter, Orifice Plate (Delta-P) (Detail M-18) ... B-40
Ultrasonic Flow Meter Installation (Detail M-19) ... B-41
Vortex Shedding Flow Meter Installation (Detail M-20) ... B-41
Flow Meter, Liquid (Annular Pilot Tube) (Detail M-21) ... B-41
Turbine Flow Meter Installation (Detail M-22) ... B-41
Flow Meter, Turbine (Insertion Type) (Detail M-23) ... B-41
Steam Flow Metering (Pipe Above) (Detail M-24) ... B-41
Steam Flow Metering (Pipe Below) (Detail M-25) ... B-42
Existing Gas Meter w\New Pulse Initiator (Residental) (Detail M-26) ... B-42
Oxygen Analyzer Installation (Detail M-27) ... B-42
Carbon Monoxide Analyzer Installation (Detail M-28) ... B-42
PH Sensor Analyzer Installation (Detail M-29) ... B-42
Conductivity Sensor (Detail M-30) ... B-42
Refrigerant Leakage Analyzer (Detail M-31) ... B-43
Oxygen Depletion Analyzer (Detail M-32) ... B-43
Nox Analyzer Installation (Detail M-33) ... B-43
Turbidity Sensor (Detail M-34) ... B-43
Total Dissolved Solids Sensor (Detail M-35) ... B-43
Water Hardness Sensor (Detail M-36) ... B-43
Pool Water Chlorine Analyzer (Detail M-37) ... B-44
Compressed Air Dew Point Sensor (Detail M-38) ... B-44

Table of Contents - continued

Name of Drawing or Detail — Page

Refrigerant Pressure Transmitter (Detail M-39) B-44
Float Switch – Support Pole Mounted (Detail M-40) B-44
Float Switch – Suspended (Detail M-41) B-44
Fuel Oil Tank Level Measurement (Continuous Purge System) (Detail M-42) B-44
Tank Level Monitoring (Detail M-43) B-45
Water Quality Controller (Detail M-44) B-45
Vibration Switch (Detail M-45) B-45
Instrument Shelter w\Temperature Sensor (Detail M-46) B-45
Instrument Shelter w\Temperature and Humidity Sensors (Detail M-47) B-45
Refrigerant Pressure Switch (Detail M-48) B-45
New Gas Meter w\New Pulse Initiator (Detail M-49) B-46
New Three-Way Mixing Valve w\Pneumatic Actuator (Detail M-50) B-46
Air Flow Measuring Station (Detail M-51) B-46
Humidity Sensor, Space (Detail M-52) B-46
Duct Static Pressure Sensor (Detail M-53) B-46
Position Switch Damper (Detail M-54) B-46
Position Switch Valve (Detail M-55) B-47
Valve Actuator\Positioner w\Transducer (Detail M-56) B-47
Differential Pressure Sensor (Room) (Detail M-57) B-47
Fuel Oil Temperature Sensor (Detail M-58) B-47
Rotary Valve Continuous Position Indication (Detail M-59) B-47
Rising Stem Valve Continuous Position Indication (Detail M-60) B-47
Existing Natural Gas Meter w\New Pulse Initiator (Industrial) (Detail M-61) B-48
Natural Gas Meter w\New Pulse Initiator (Industrial) (Detail M-62) B-48
Air Filter Differential Pressure Sensor (Detail M-63) B-48
Duct Static Pressure Switch (Detail M-64) B-48
Duct Mounted Low Temperature Device (Detail M-65) B-48
Analog Output, Fan Pneumatic Inlet Vane Operator (Detail M-66) B-48
Flow Meter, Vortex Shedding (Insertion Type) (Detail M-67) B-49
Valve (2-Position), Actuator w\Solenoid Valve (Detail M-68) B-49
Instrument Air Line Pressure Switch (Detail M-69) B-49
Door Position Switch (Detail M-70) B-49
Temperature Sensor, Freezer or Refrigerator (Detail M-71) B-49
Instrument Air Filter Station (Detail M-72) B-49
Differential Pressure Sensor for Wet Vaccum Strainer Station (Detail M-73) B-50
Differential Pressure Sensor (Pipe) (Detail M-74) B-50
Pressure Sensor (Steam Pipe) (Detail M-75) B-50
Space RTD Mounting (For Ceiling Mount) (Detail M-76) B-50
Space Humidity Mounting (For Ceiling Mount) (Detail M-77) B-50

Table of Contents - continued

Name of Drawing or Detail — Page

Static Pressure Sensor (Room) (Detail M-78) B-50
New Three-Way Mixing Valve w\Electric Actuator (Detail M-79) B-51
Terminal Box Controller without Reheat Coil Valve (Detail M-80) B-51
Terminal Reheat Coil Valve Controller (Detail M-81) B-51
Fan Differential Pressure Sensor Installation (Detail M-82) B-51
Analog Output Zone Damper Control for Multi-Zone Unit (Detail M-83) B-51
Duct High Humidity Switch Installation (Detail M-84) B-51
Cooling Tower Basin Temperature Sensor (Detail M-85) B-52

AIT M1 TEMPERATURE SENSOR, PIPE

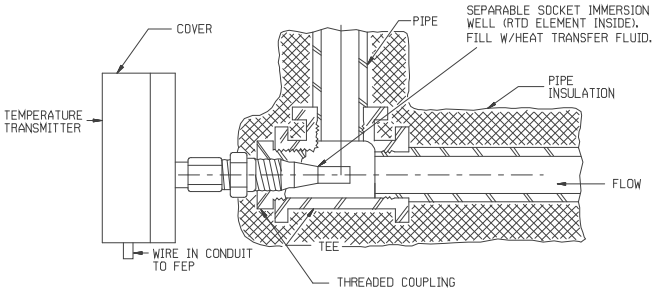

RTD INSTALLATION - SMALL PIPING

DETAIL M-1

AIT M2 TEMPERATURE SENSOR, LARGE PIPE

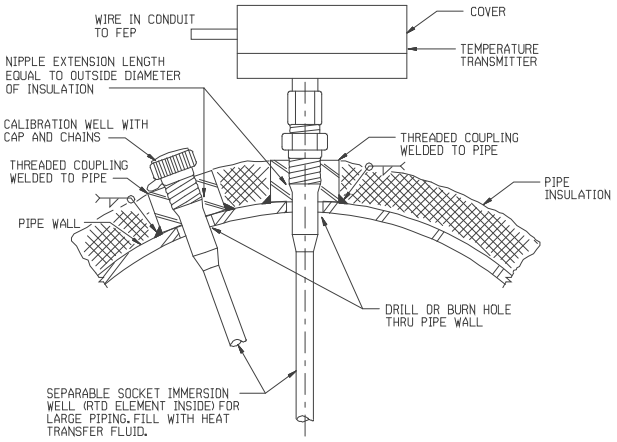

RTD INSTALLATION - LARGE PIPING

DETAIL M-2

AIT M3 TEMPERATURE SENSOR, DUCT

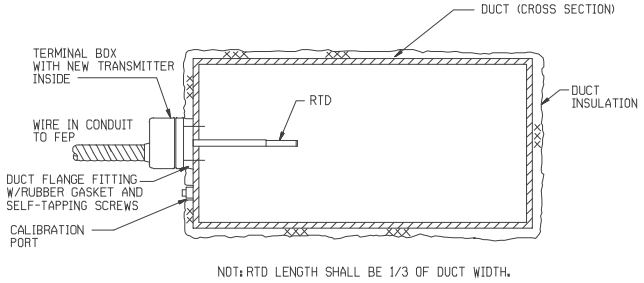

NOT: RTD LENGTH SHALL BE 1/3 OF DUCT WIDTH.

DUCT POINT TEMPERATURE INSTRUMENT INSTALLATION

DETAIL M-3

AIT M4 AVERAGING TEMPERATURE SENSOR, DUCT

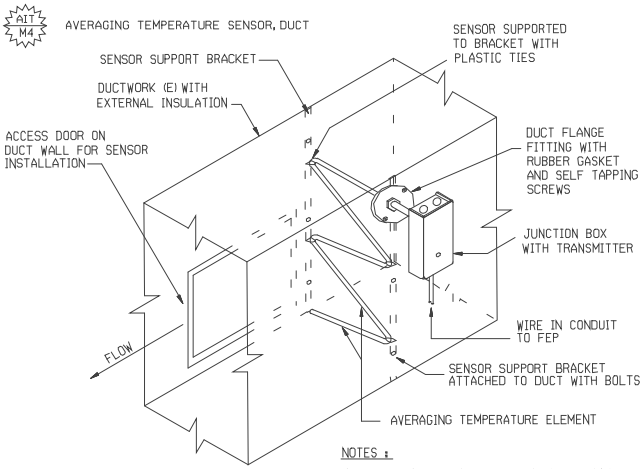

NOTES :

1. PROVIDE 1 FT LENGTH OF SENSING ELEMENT FOR EVERY SQ. FT. OF DUCT CROSS SECTION.
2. MINIMUM BENDING RADIUS OF AVERAGING TEMPERATURE ELEMENT IS 3 INCHES.

DUCT-MOUNTED AVERAGING TEMPERATURE SENSOR INSTALLATION

DETAIL M-4

AIT M5 TEMPERATURE SENSOR, FINISHED SPACE

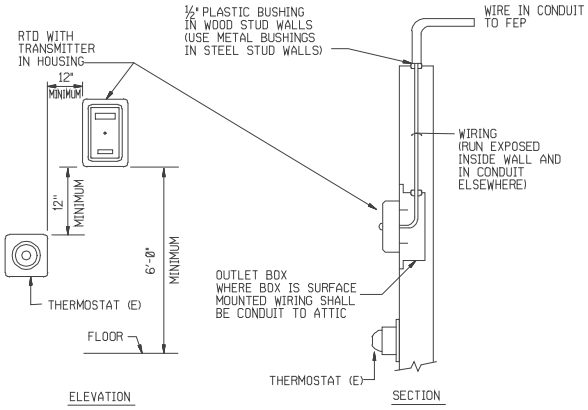

SPACE RTD MOUNTING (FOR FINISHED INTERIORS)

DETAIL M-5

AIT M6 TEMPERATURE SENSOR, UNFINISHED SPACE

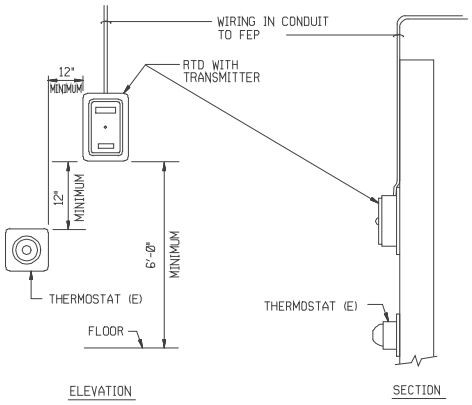

SPACE RTD MOUNTING (FOR UNFINISHED INTERIORS)

DETAIL M-6

DIP M7 DIFFERENTIAL PRESSURE SWITCH, FAN AIR FLOW

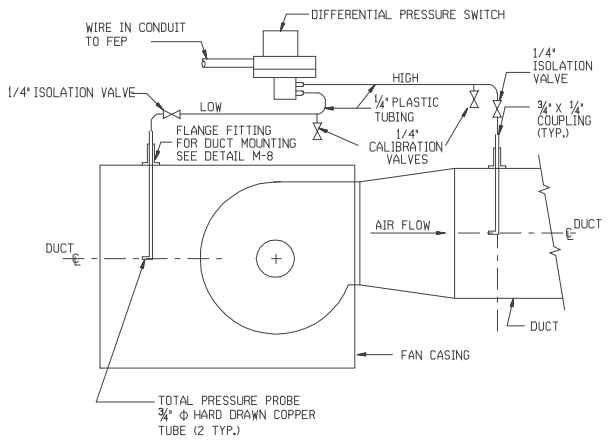

FAN AIR FLOW SWITCH INSTALLATION

DETAIL M-7

DIP M8 DIFFERENTIAL PRESSURE SWITCH, AIR FILTER

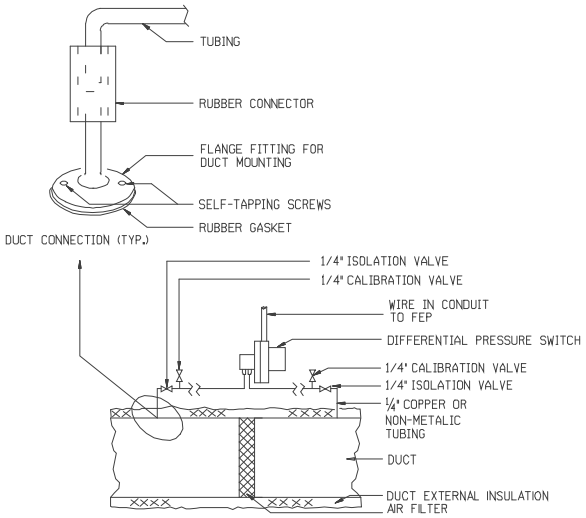

AIR FILTER DIFFERENTIAL PRESSURE SWITCH INSTALLATION

DETAIL M-8

AIM M9 HUMIDITY SENSOR, DUCT

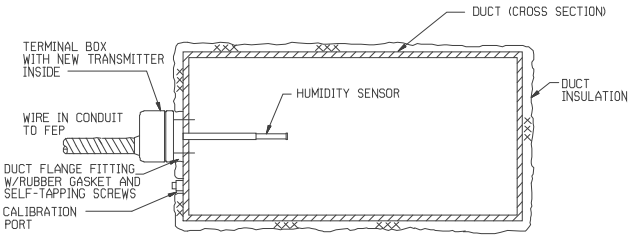

NOT: SENSOR LENGTH SHALL BE 1/3 OF DUCT WIDTH.

DUCT RELATIVE HUMIDITY INSTRUMENT INSTALLATION

DETAIL M-9

DIP M10 DIFFERENTIAL PRESSURE SWITCH, LIQUID

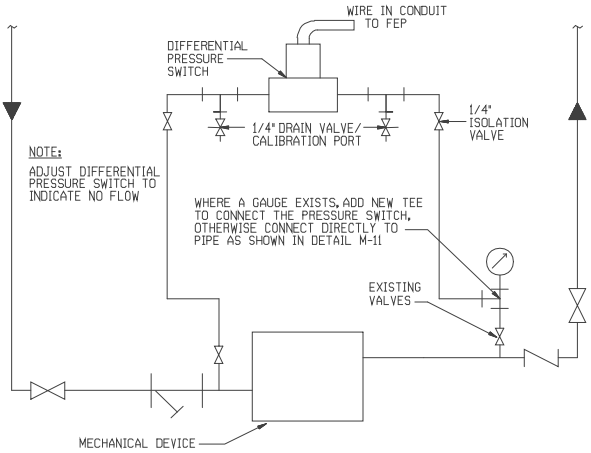

DIFFERENTIAL PRESSURE SWITCH, LIQUID INSTALLATION

DETAIL M-10

AIP M11 PRESSURE TRANSMITTER, LIQUID

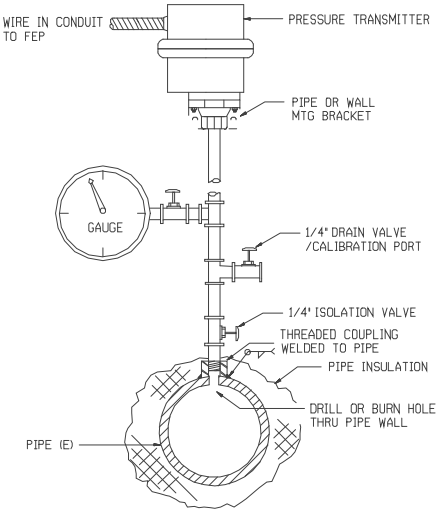

INSTALLATION OF PRESSURE TRANSMITTER

DETAIL M-11

DIP M12 PRESSURE SWITCH, LIQUID

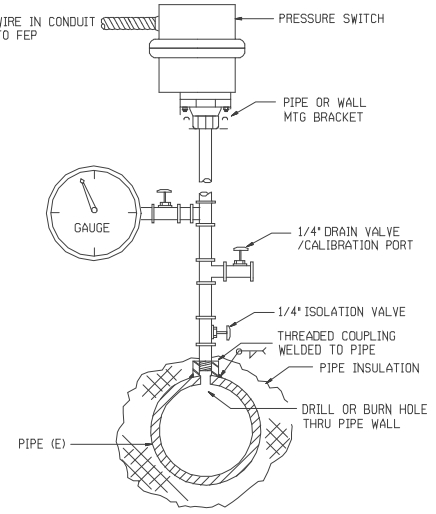

INSTALLATION OF PRESSURE SWITCH

DETAIL M-12

AOC M13 ANALOG OUTPUT, TERMINAL BOX CONTROLLER

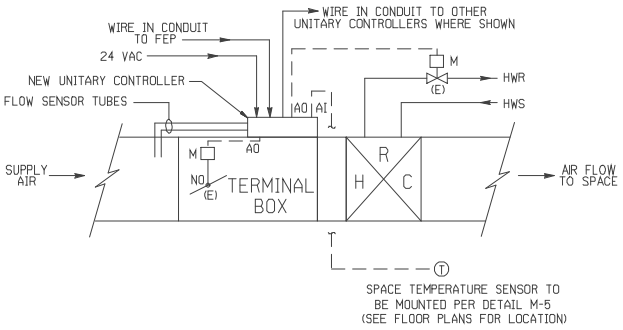

TERMINAL BOX CONTROLLER

DETAIL M-13

DIP M14 DIFFERENTIAL PRESSURE SWITCH, INSTRUMENT AIR FILTER

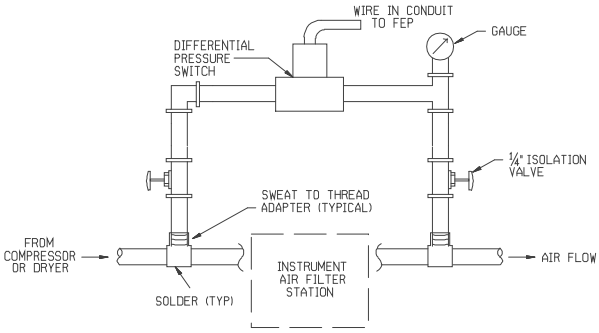

DIFFERENTIAL PRESSURE SWITCH FOR INSTRUMENT AIR FILTER

DETAIL M-14

AIT M15 TEMPERATURE SENSOR, OUTDOOR (SUNSHIELD)

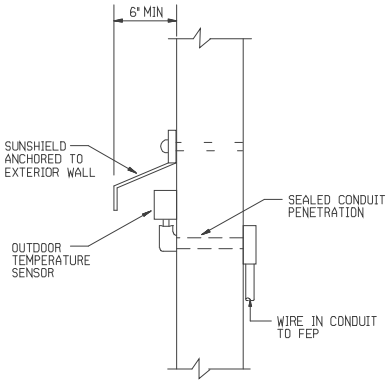

OUTDOOR TEMPERATURE SENSOR WITH SUNSHIELD

DETAIL M-15

AIZ M16 POSITION INDICATION, DAMPER

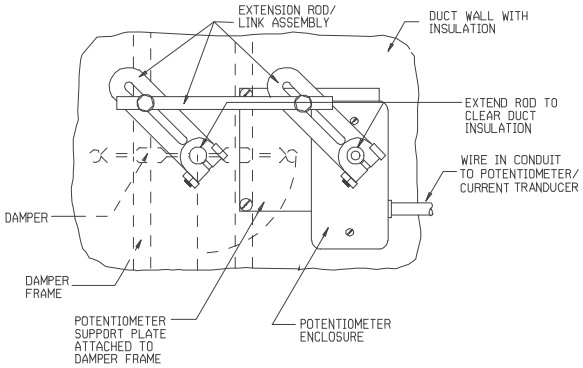

DAMPER POSITION INDICATION POTENTIOMETER INSTALLATION DETAILS OUTSIDE DUCT MOUNTING

DETAIL M-16

AIF M17 FLOW METER, VENTURI (DELTA-P)

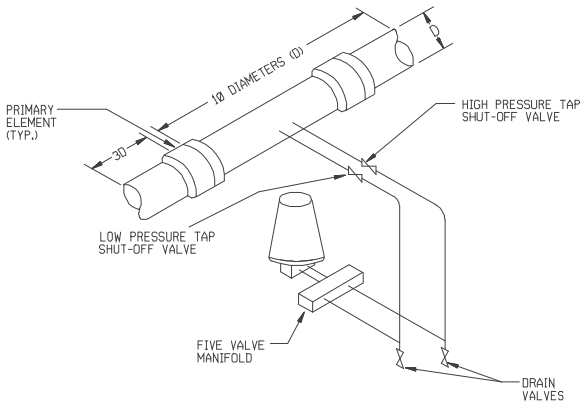

FLOW METER, VENTURI (DELTA-P)

DETAIL M-17

AIF M18 FLOW METER, ORIFICE PLATE (DELTA-P)

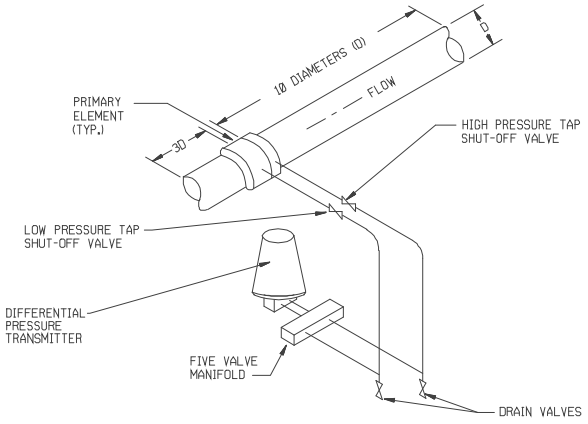

FLOW METER, ORIFICE PLATE (DELTA-P)

DETAIL M-18

AIF M19 FLOW METER, ULTRASONIC

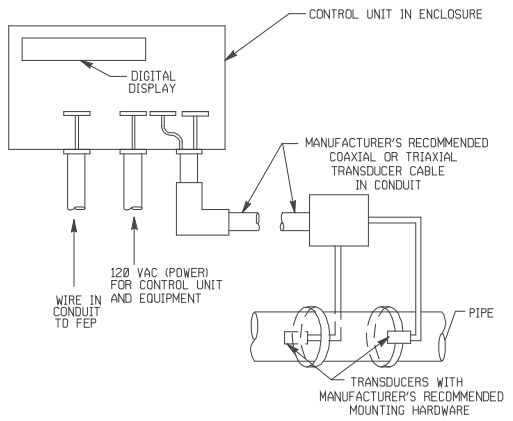

ULTRASONIC FLOW METER INSTALLATION

DETAIL M-19

AIF M20 FLOW METER, VORTEX SHEDDING

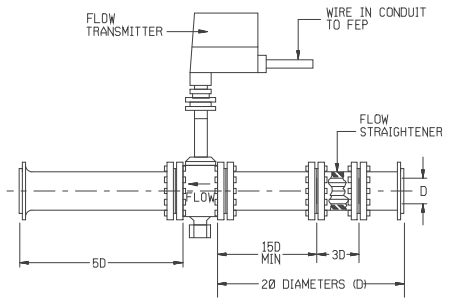

VORTEX SHEDDING FLOW METER INSTALLATION

DETAIL M-20

AIF M21 FLOW METER, LIQUID (ANNULAR PITOT TUBE)

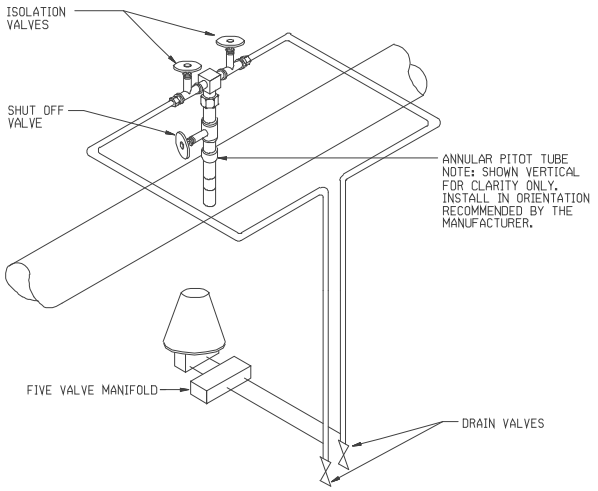

FLOW METER, LIQUID (ANNULAR PITOT TUBE)

DETAIL M-21

AIF M22 FLOW METER, TURBINE

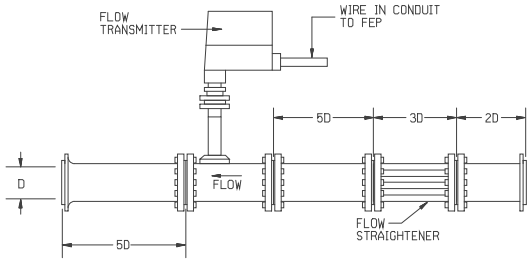

TURBINE FLOW METER INSTALLATION

DETAIL M-22

AIF M23 FLOW METER, TURBINE (INSERTION TYPE)

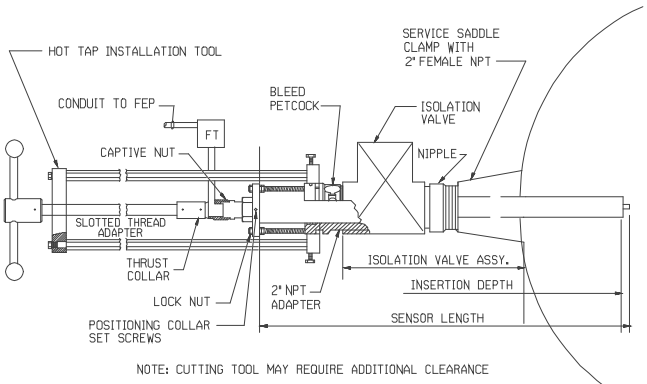

FLOW METER, TURBINE (INSERTION TYPE)

DETAIL M-23

AIF M24 FLOW METER, STEAM (PIPE ABOVE)

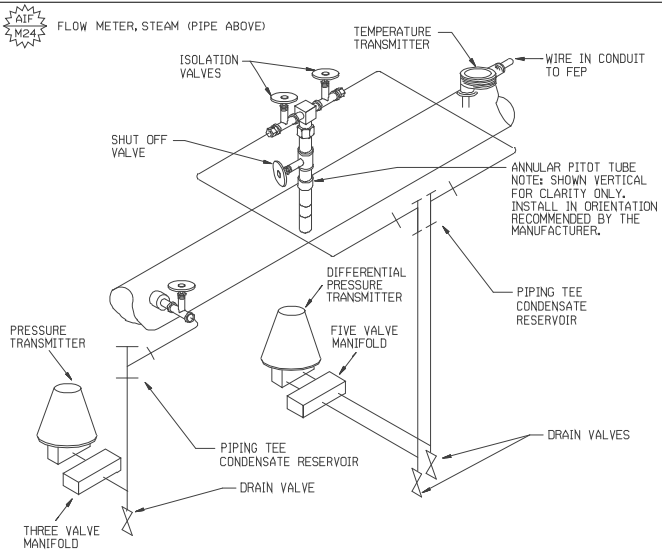

STEAM FLOW METERING (PIPE ABOVE)

DETAIL M-24

A1F M25 FLOW METER, STEAM (PIPE BELOW)

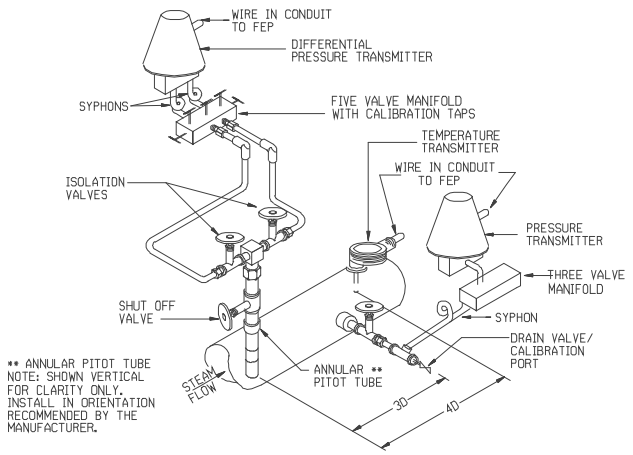

STEAM FLOW METERING (PIPE BELOW)

DETAIL M-25

DIF M26 FLOW METER, EXISTING NATURAL GAS W/NEW PULSE INITIATOR (RESIDENTIAL)

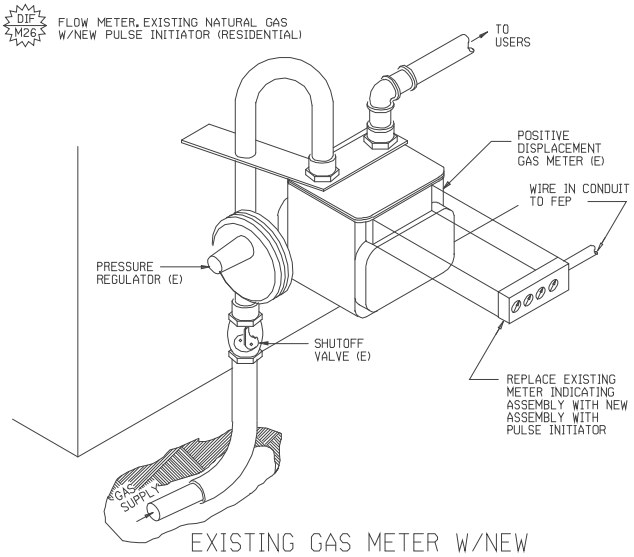

EXISTING GAS METER W/NEW PULSE INITIATOR (RESIDENTIAL)

DETAIL M-26

A1A M27 ANALYZER, OXYGEN

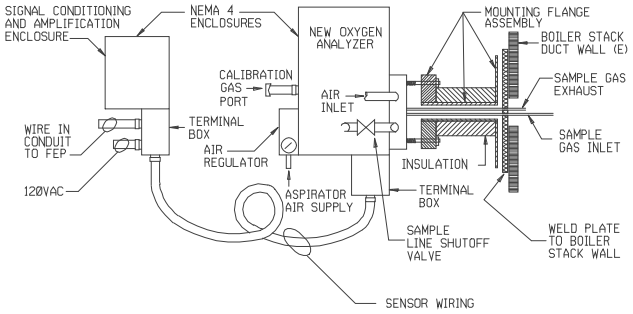

OXYGEN ANALYZER INSTALLATION

DETAIL M-27

A1A M28 ANALYZER, CARBON MONOXIDE

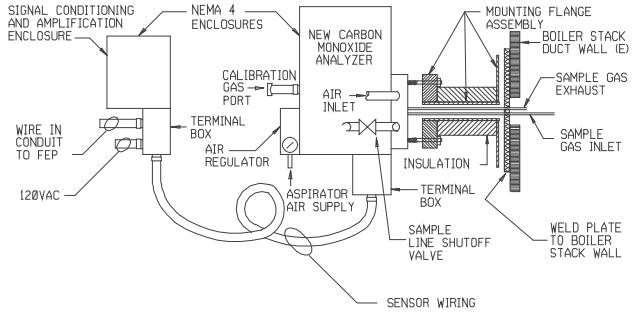

CARBON MONOXIDE ANALYZER INSTALLATION

DETAIL M-28

A1A M29 ANALYZER, pH SENSOR

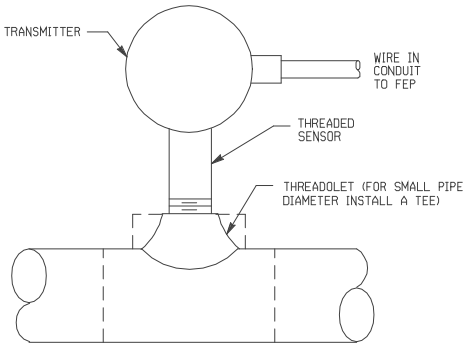

pH SENSOR ANALYZER INSTALLATION

DETAIL M-29

A1A M30 ANALYZER, CONDUCTIVITY

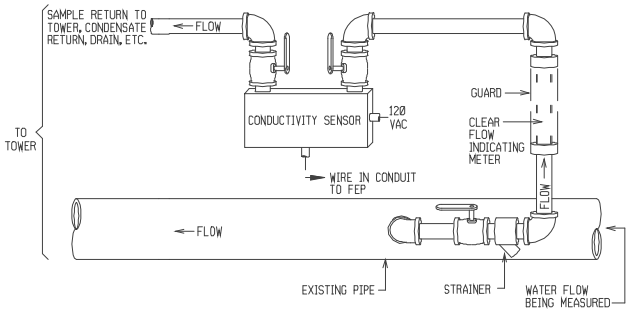

CONDUCTIVITY SENSOR

DETAIL M-30

A1A M31 ANALYZER, REFRIGERANT LEAKAGE

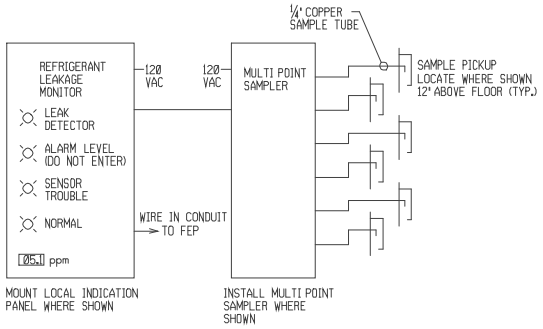

REFRIGERANT LEAKAGE ANALYZER

DETAIL M-31

A1A M32 ANALYZER, OXYGEN DEPLETION

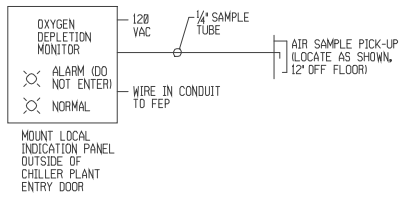

OXYGEN DEPLETION ANALYZER

DETAIL M-32

A1A M33 ANALYZER, NITROUS GASES (NOx)

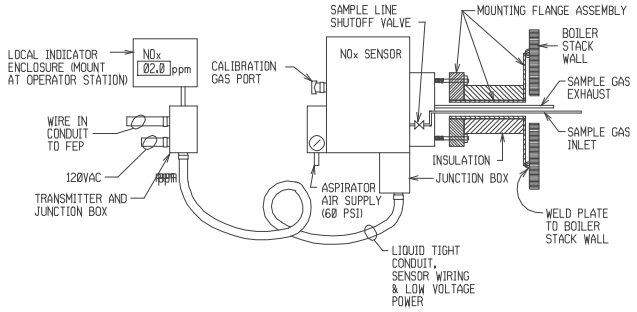

NOx ANALYZER INSTALLATION

DETAIL M-33

A1A M34 ANALYZER, TURBIDITY

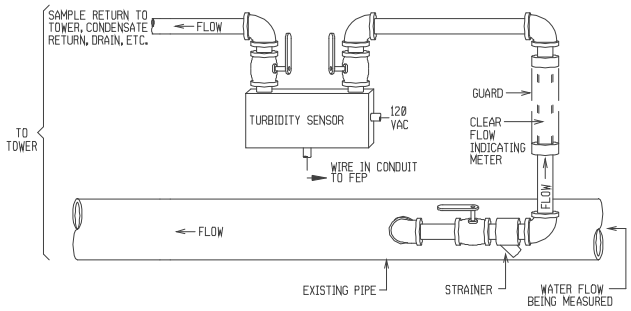

TURBIDITY SENSOR

DETAIL M-34

A1A M35 ANALYZER, TOTAL DISSOLVED SOLIDS

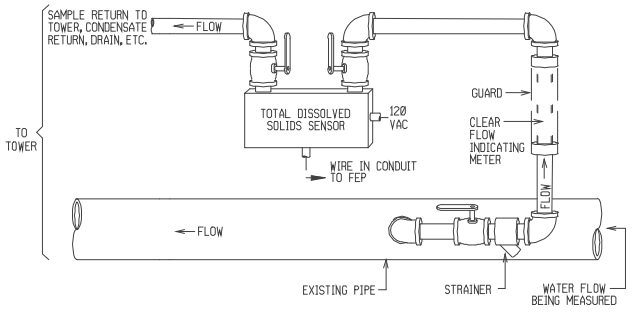

TOTAL DISSOLVED SOLIDS SENSOR

DETAIL M-35

A1A M36 ANALYZER, WATER HARDNESS

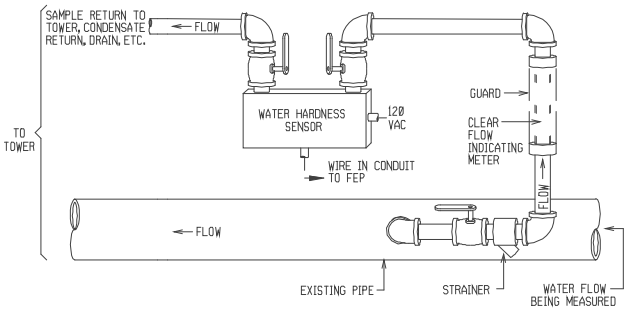

WATER HARDNESS SENSOR

DETAIL M-36

AIA M37 ANALYZER, CHLORINE (POOL WATER)

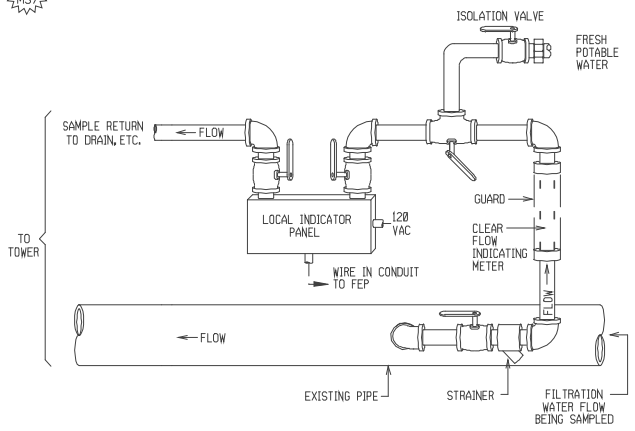

POOL WATER CHLORINE ANALYZER

DETAIL M-37

AIM M38 DEW POINT SENSOR, COMPRESSED AIR

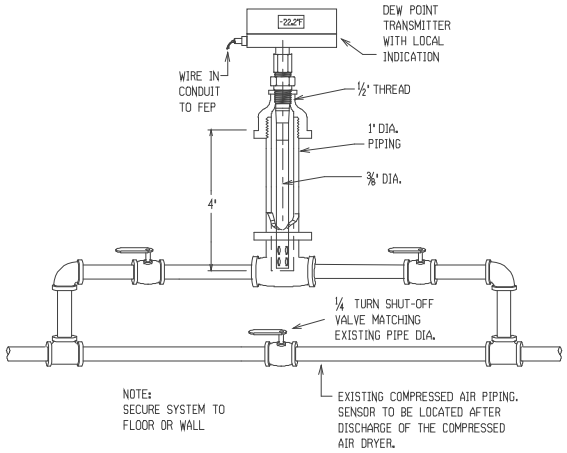

COMPRESSED AIR DEW POINT SENSOR

DETAIL M-38

AIP M39 PRESSURE TRANSMITTER, REFRIGERANT

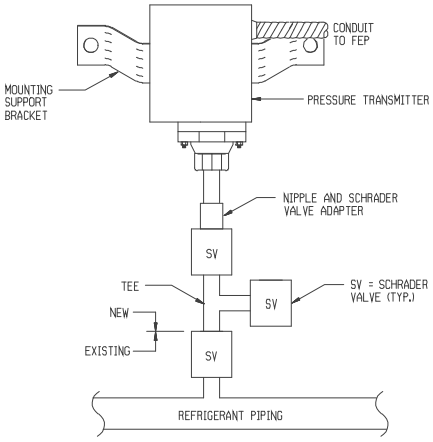

REFRIGERANT PRESSURE TRANSMITTER

DETAIL M-39

DIL M40 FLOAT SWITCH, POLE MOUNTED

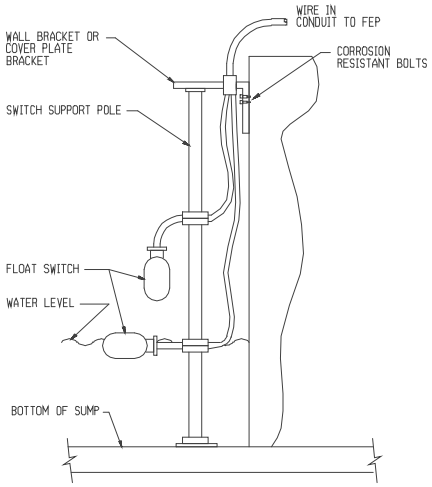

FLOAT SWITCH - SUPPORT POLE MOUNTED

DETAIL M-40

DIL M41 FLOAT SWITCH, SUSPENDED

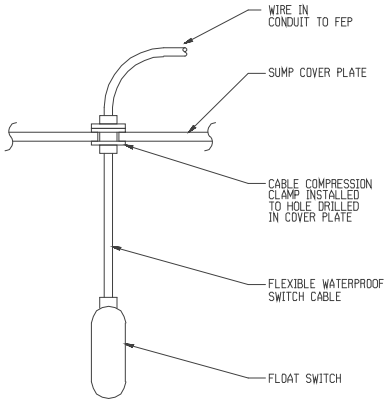

FLOAT SWITCH - SUSPENDED

DETAIL M-41

AIL M42 LEVEL TRANSMITTER, BUBBLER TYPE

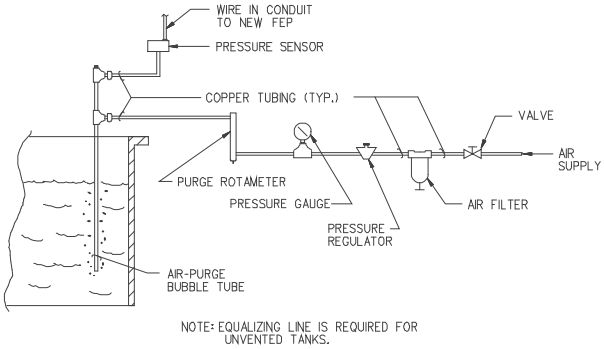

FUEL OIL TANK LEVEL MEASUREMENT (CONTINUOUS PURGE SYSTEM)

DETAIL M-42

AIL M43 LEVEL TRANSMITTER, VENTED TANK

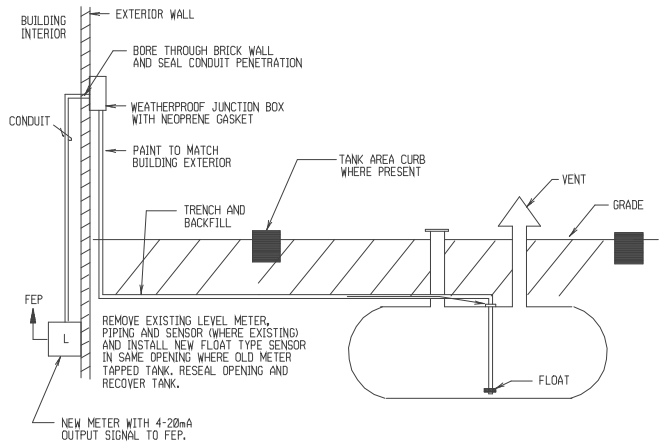

TANK LEVEL MONITORING

DETAIL M-43

DIA M44 WATER QUALITY CONTROLLER

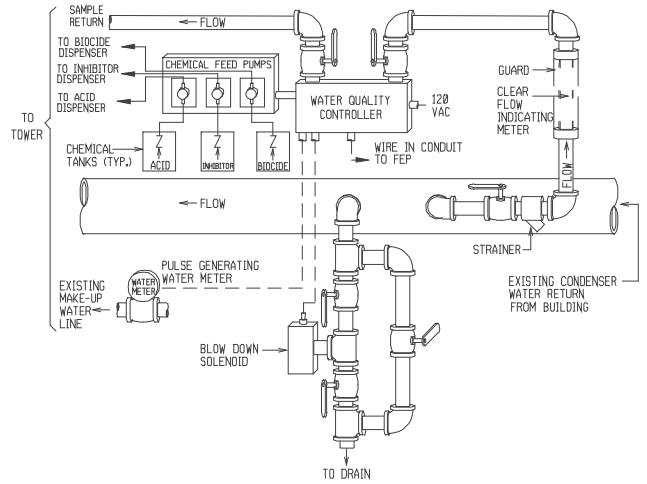

WATER QUALITY CONTROLLER

DETAIL M-44

DIX M45 VIBRATION SWITCH

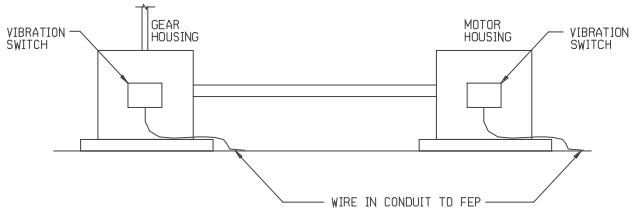

NOTE:
IF ONLY ONE VIBRATION SWITCH IS REQUIRED, MOUNT IT AT THE GEAR HOUSING. IF TWO VIBRATION SWITCHES ARE REQUIRED, MOUNT THEM AT THE GEAR AND MOTOR HOUSING.

VIBRATION SWITCH

DETAIL M-45

AIT M46 INSTRUMENT SHELTER W/TEMPERATURE SENSOR

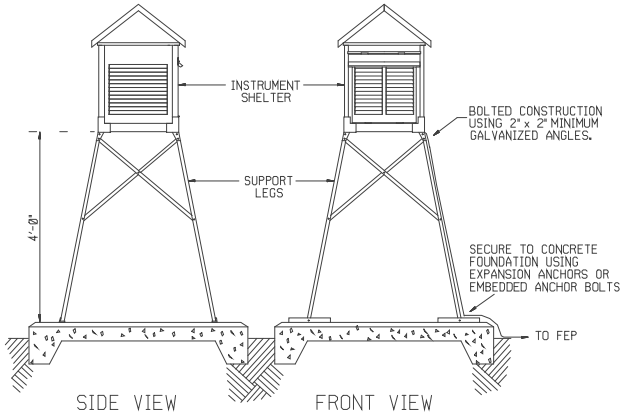

INSTRUMENT SHELTER W/TEMPERATURE SENSOR

DETAIL M-46

AIM M47 INSTRUMENT SHELTER W/TEMPERATURE AND HUMIDITY SENSORS

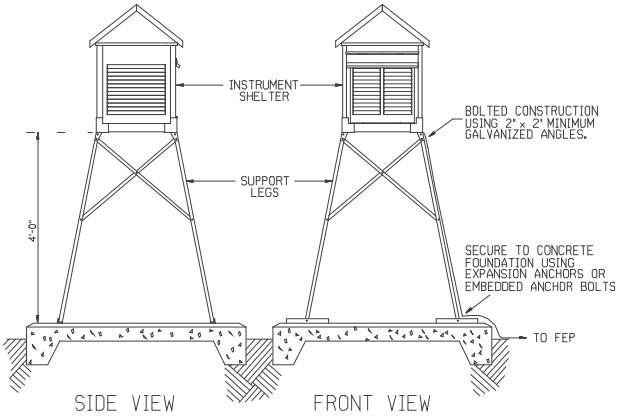

INSTRUMENT SHELTER W/TEMPERATURE AND HUMIDITY SENSORS

DETAIL M-47

DIP M48 PRESSURE SWITCH, REFRIGERANT

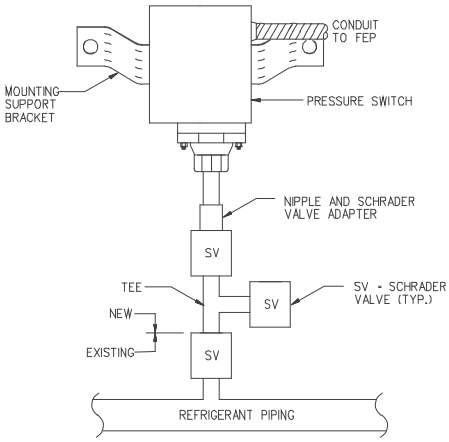

REFRIGERANT PRESSURE SWITCH

DETAIL M-48

DIF M49 FLOW METER, NEW NATURAL GAS W/NEW PULSE INITIATOR (RESIDENTIAL)

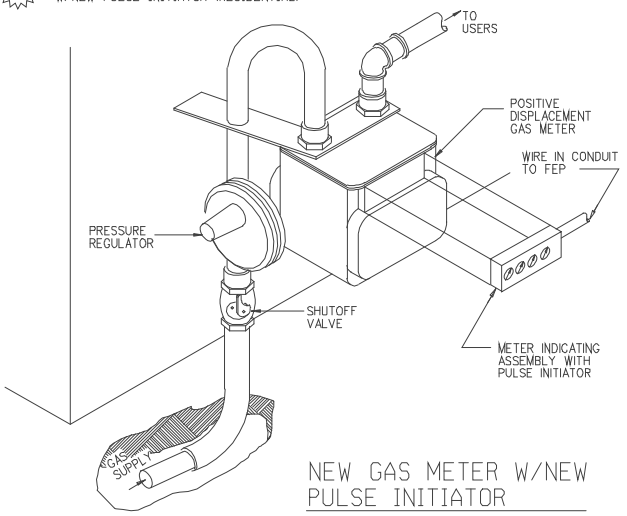

NEW GAS METER W/NEW PULSE INITIATOR

DETAIL M-49

AOZ M50 NEW THREE-WAY MIXING VALVE W/PNEUMATIC ACTUATOR

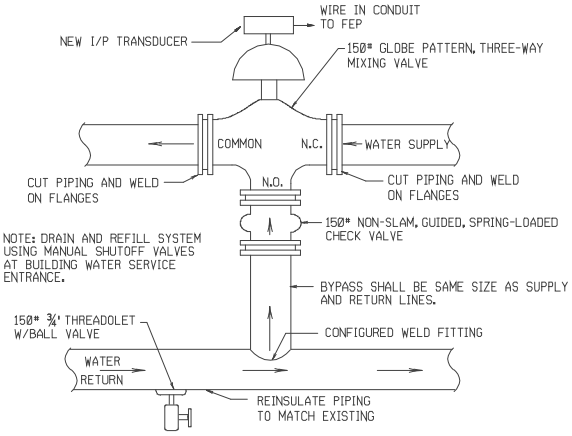

NEW THREE-WAY MIXING VALVE W/PNEUMATIC ACTUATOR

DETAIL M-50

AIF M51 AIR FLOW MEASURING STATION

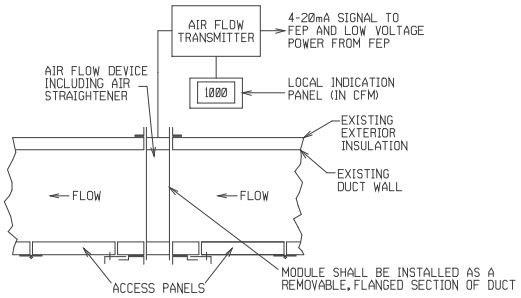

AIR FLOW MEASURING STATION

DETAIL M-51

AIM M52 HUMIDITY SENSOR, SPACE

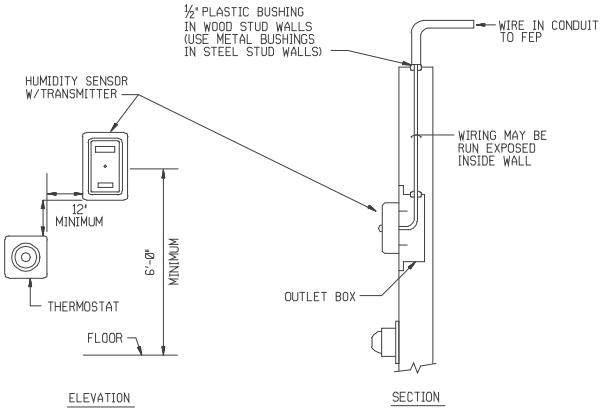

HUMIDITY SENSOR, SPACE

DETAIL M-52

AIP M53 STATIC PRESSURE SENSOR, DUCT

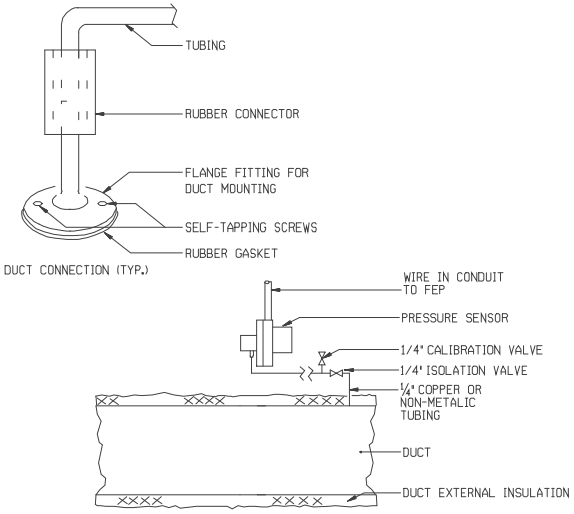

DUCT STATIC PRESSURE SENSOR

DETAIL M-53

DIZ M54 POSITION SWITCH, DAMPER

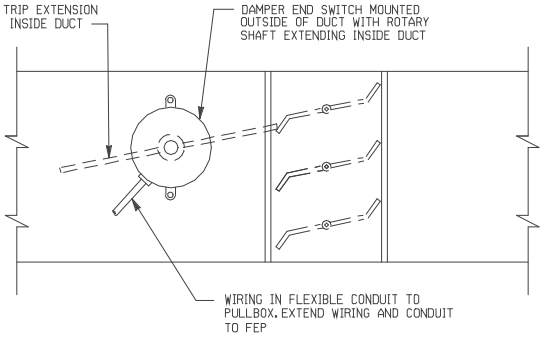

POSITION SWITCH DAMPER

DETAIL M-54

DIZ M55 POSITION SWITCH, VALVE

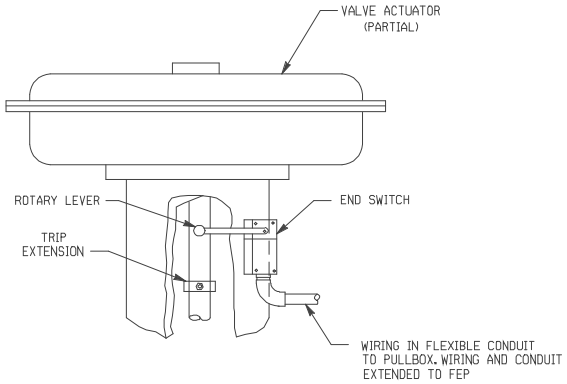

POSITION SWITCH VALVE

DETAIL M-55

AOZ M56 VALVE ACTUATOR/POSITIONER W/TRANSDUCER

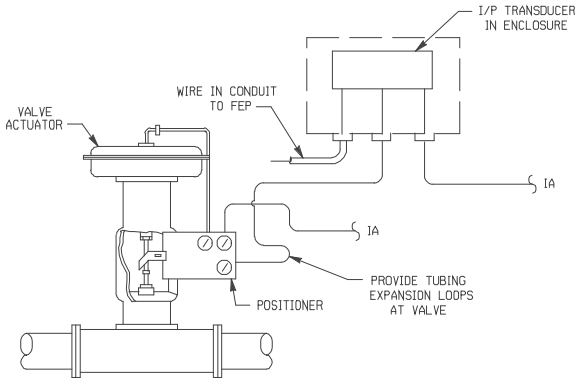

VALVE ACTUATOR/POSITIONER W/TRANSDUCER

DETAIL M-56

AIP M57 DIFFERENTIAL PRESSURE SENSOR, ROOM

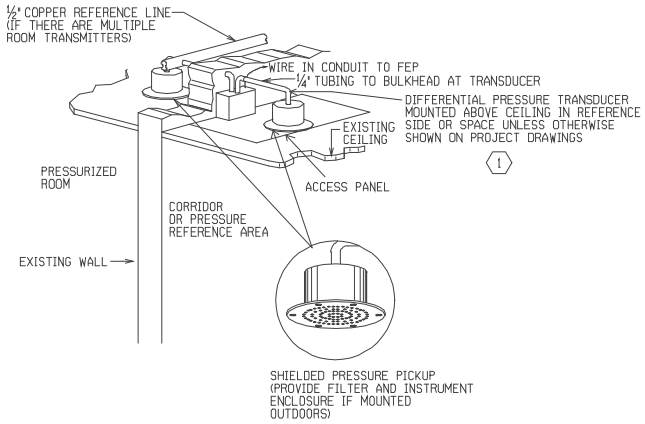

DIFFERENTIAL PRESSURE SENSOR (ROOM)

DETAIL M-57

AIT M58 TEMPERATURE SENSOR, FUEL OIL (PIPE)

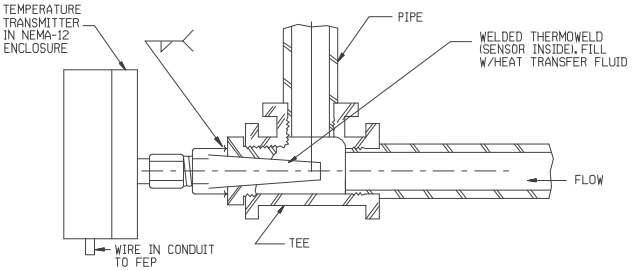

FUEL OIL TEMPERATURE SENSOR

DETAIL M-58

AIZ M59 POSITION INDICATION, ROTARY VALVE

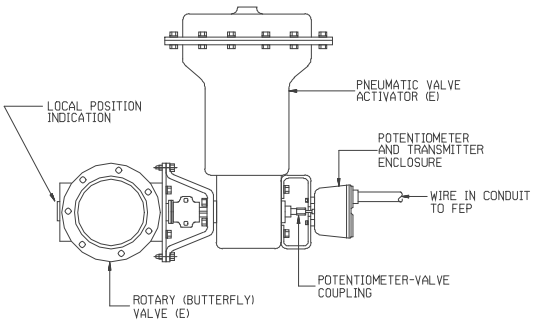

ROTARY VALVE CONTINUOUS POSITION INDICATION

DETAIL M-59

AIZ M60 POSITION INDICATION, RISING STEM VALVE

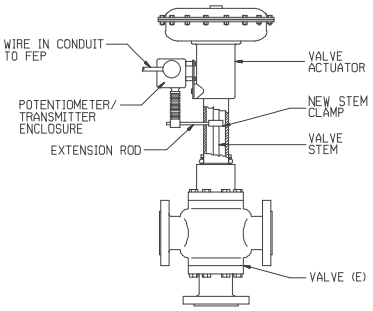

RISING STEM VALVE CONTINUOUS POSITION INDICATION

DETAIL M-60

DIF M61 FLOW METER, EXISTING NATURAL GAS W/NEW PULSE INITIATOR (INDUSTRIAL)

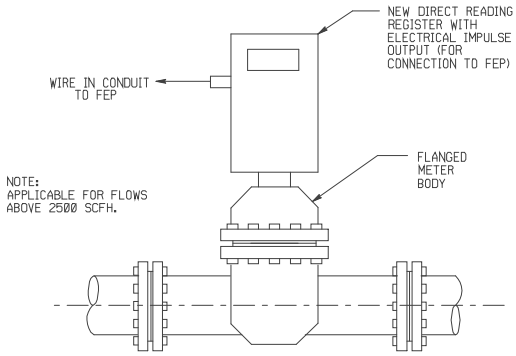

EXISTING NATURAL GAS METER W/NEW PULSE INITIATOR (INDUSTRIAL)

DETAIL M-61

DIF M62 FLOW METER, NEW NATURAL GAS W/NEW PULSE INITIATOR (INDUSTRIAL)

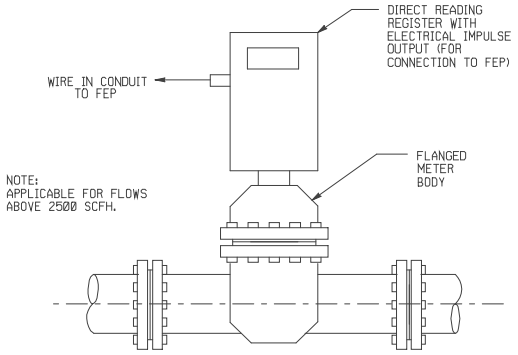

NATURAL GAS METER W/NEW PULSE INITIATOR (INDUSTRIAL)

DETAIL M-62

AIP M63 DIFFERENTIAL PRESSURE SENSOR, AIR FILTER

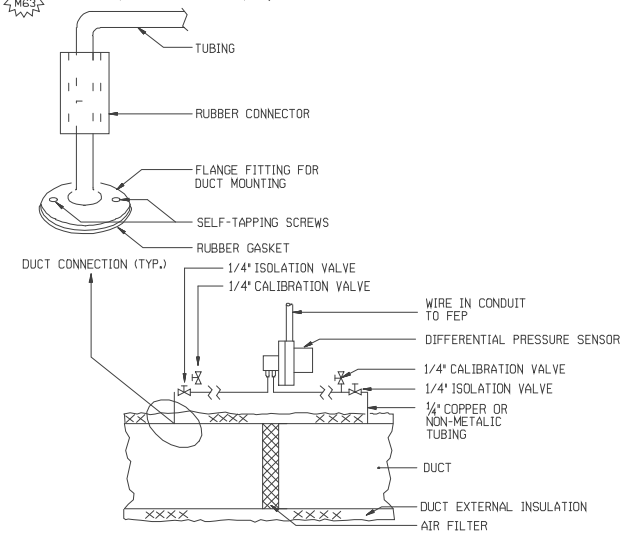

AIR FILTER DIFFERENTIAL PRESSURE SENSOR

DETAIL M-63

DIP M64 DUCT STATIC PRESSURE SWITCH

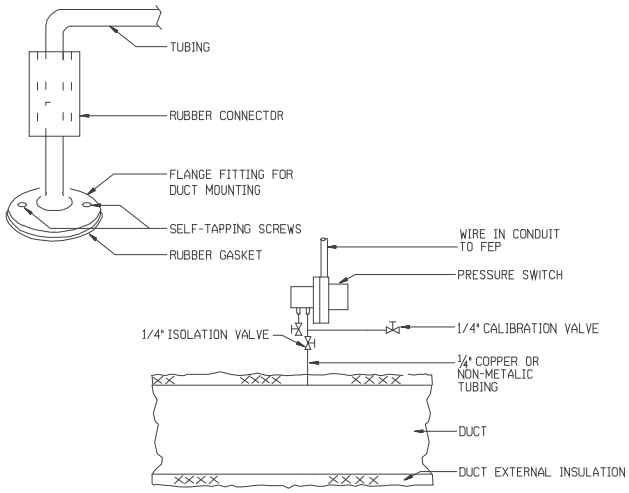

DUCT STATIC PRESSURE SWITCH

DETAIL M-64

DIT M65 LOW TEMPERATURE DEVICE, DUCT MOUNTED

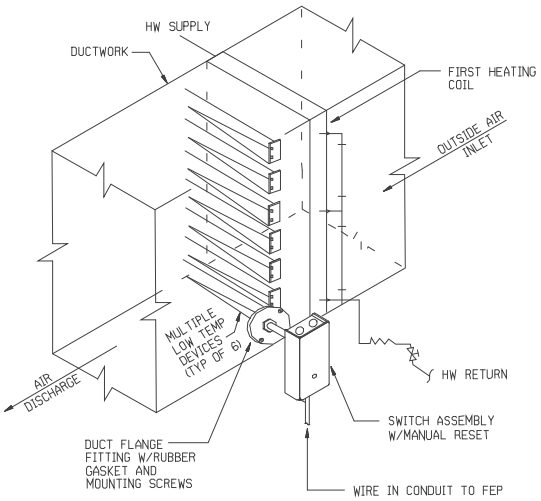

DUCT MOUNTED LOW TEMPERATURE DEVICE

DETAIL M-65

AOC M66 ANALOG OUTPUT, FAN PNEUMATIC INLET VANE OPERATOR

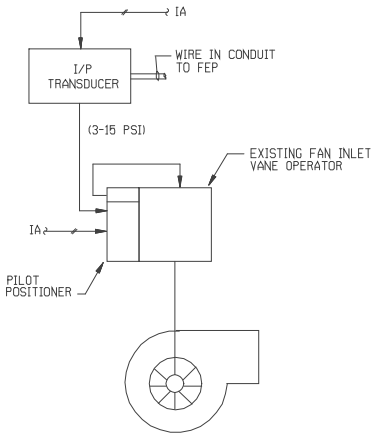

ANALOG OUTPUT, FAN PNEUMATIC INLET VANE OPERATOR

DETAIL M-66

AIF M67 FLOW METER, VORTEX SHEDDING (INSERTION TYPE)

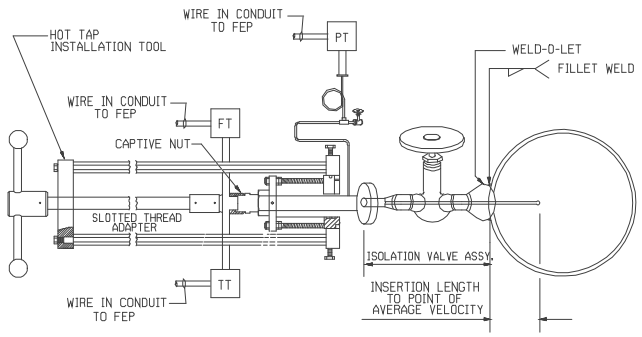

NOTE: CUTTING TOOL MAY REQUIRE ADDITIONAL CLEARANCE

FLOW METER, VORTEX SHEDDING (INSERTION TYPE)

DETAIL M-67

DOZ M68 VALVE (2-POSITION), ACTUATOR W/SOLENOID VALVE

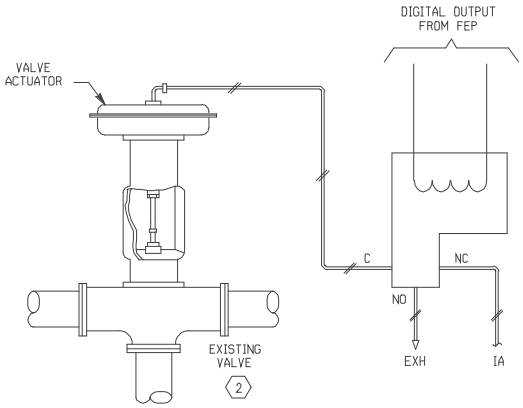

VALVE (2-POSITION), ACTUATOR W/SOLENOID VALVE

DETAIL M-68

DIP M69 PRESSURE SWITCH, AIR LINE

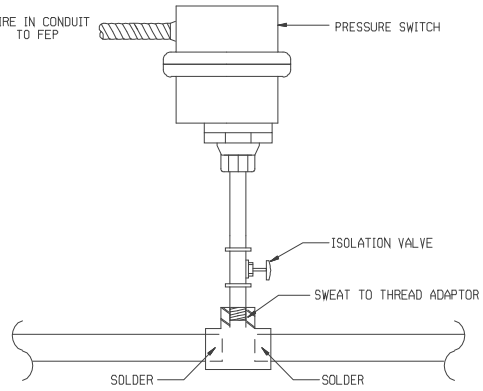

INSTRUMENT AIR LINE PRESSURE SWITCH

DETAIL M-69

DIZ M70 POSITION SWITCH, DOOR

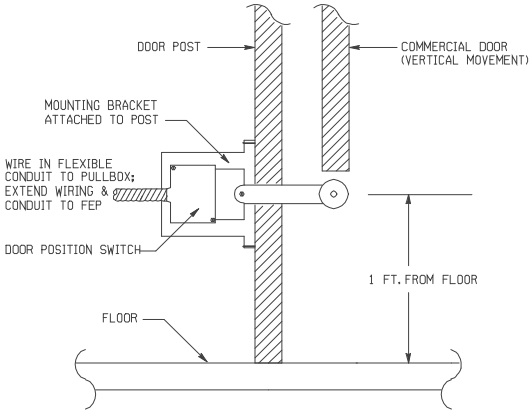

DOOR POSITION SWITCH

DETAIL M-70

AIT M71 TEMPERATURE SENSOR, FREEZER OR REFRIGERATOR

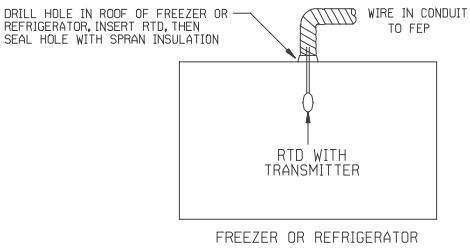

TEMPERATURE SENSOR, FREEZER OR REFRIGERATOR

DETAIL M-71

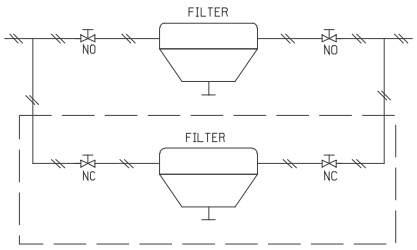

NOTE: PROVIDE ADDITIONAL FILTER WHERE SHOWN.

INSTRUMENT AIR FILTER STATION

DETAIL M-72

AIP M73 DIFFERENTIAL PRESSURE SENSOR, WET VACUUM STRAINER STATION

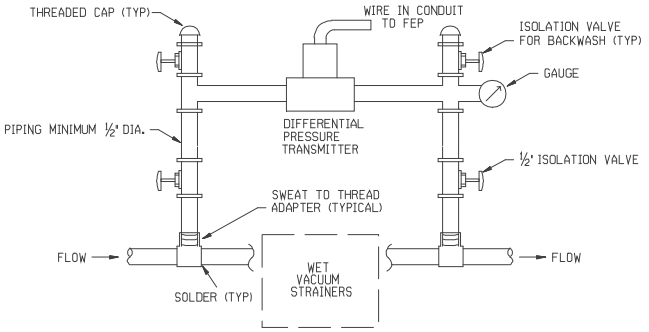

DIFFERENTIAL PRESSURE SENSOR FOR WET VACCUM STRAINER STATION

DETAIL M-73

AIP M74 DIFFERENTIAL PRESSURE TRANSMITTER (LIQUID)

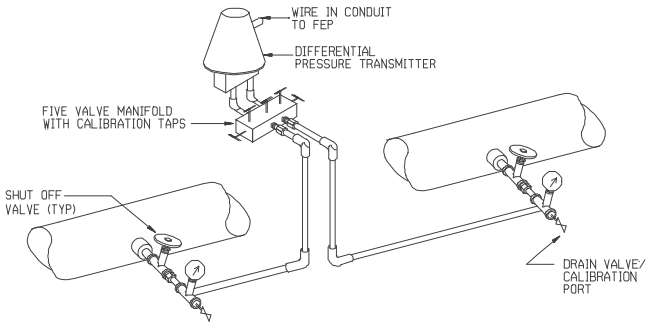

DIFFERENTIAL PRESSURE SENSOR (PIPE)

DETAIL M-74

AIP M75 PRESSURE TRANSMITTER, STEAM

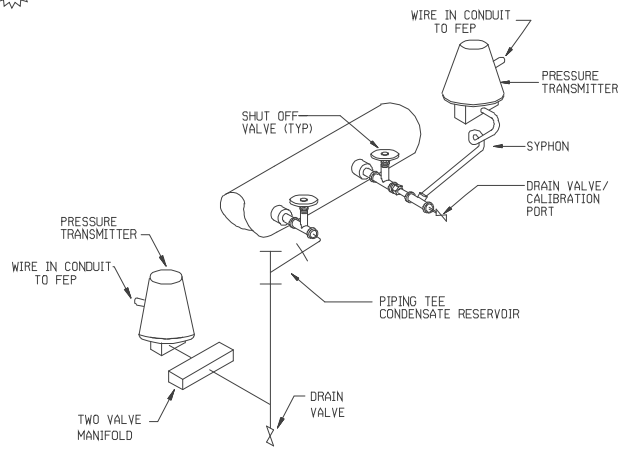

PRESSURE SENSOR (STEAM PIPE)

DETAIL M-75

AIT M76 TEMPERATURE SENSOR, CEILING MOUNT

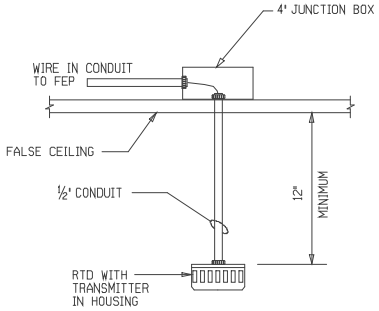

SPACE RTD MOUNTING (FOR CEILING MOUNT)

DETAIL M-76

AIM M77 HUMIDITY SENSOR, CEILING MOUNT

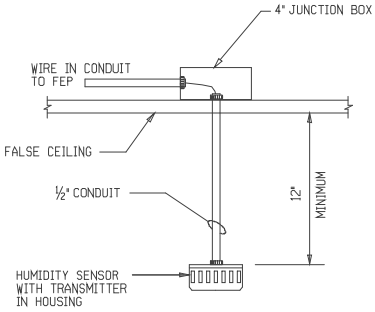

SPACE HUMIDITY MOUNTING (FOR CEILING MOUNT)

DETAIL M-77

AIP M78 STATIC PRESSURE SENSOR, ROOM

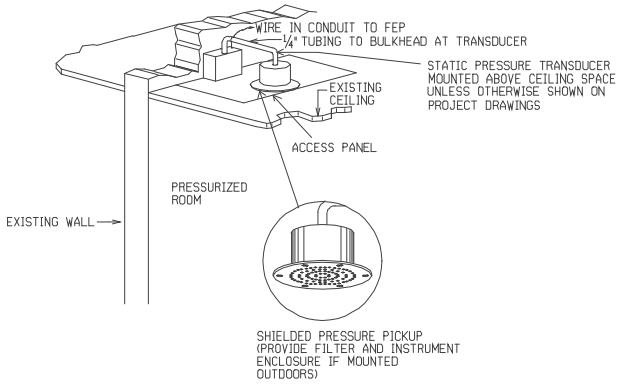

STATIC PRESSURE SENSOR (ROOM)

DETAIL M-78

AOZ M79 NEW THREE-WAY MIXING VALVE W/ELECTRIC ACTUATOR

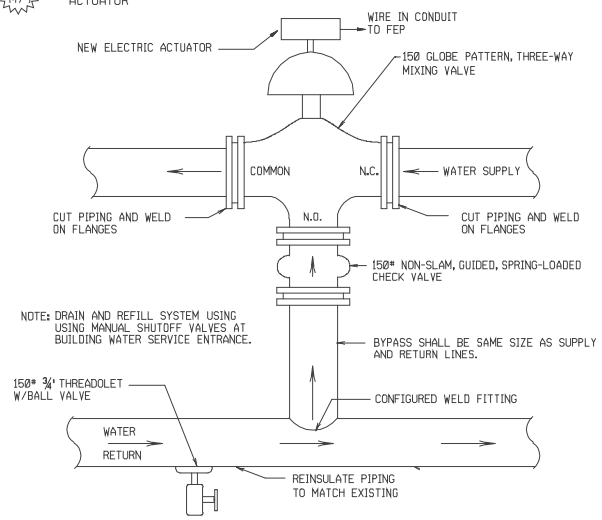

NEW THREE-WAY MIXING VALVE W/ELECTRIC ACTUATOR

DETAIL M-79

AOC M80 ANALOG OUTPUT, TERMINAL BOX CONTROLLER WITHOUT REHEAT COIL VALVE

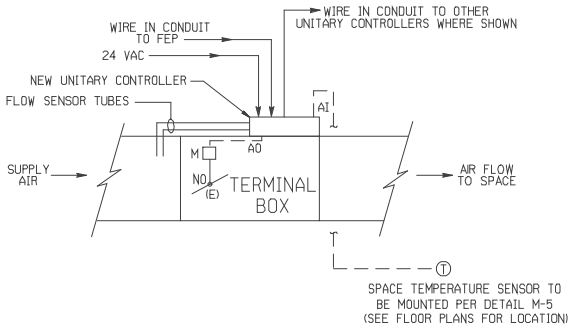

TERMINAL BOX CONTROLLER WITHOUT REHEAT COIL VALVE

DETAIL M-80

AOC M81 ANALOG OUTPUT, TERMINAL REHEAT COIL VALVE CONTROLLER

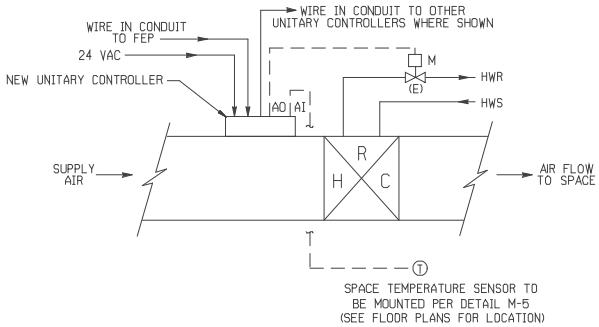

TERMINAL REHEAT COIL VALVE CONTROLLER

DETAIL M-81

AIP M82 DIFFERENTIAL PRESSURE SENSOR, FAN

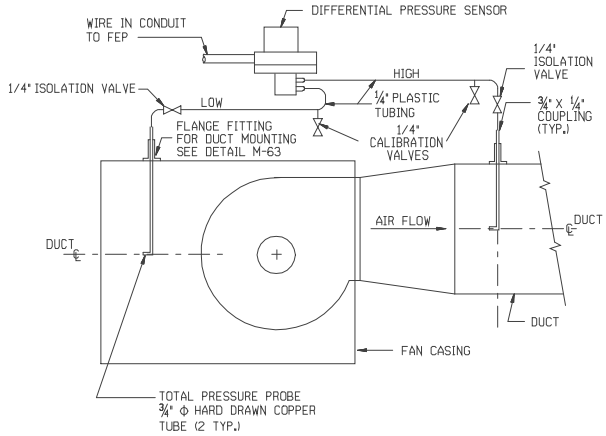

FAN DIFFERENTIAL PRESSURE SENSOR INSTALLATION

DETAIL M-82

AOC M83 ANALOG OUTPUT, ZONE DAMPER CONTROL FOR MULTIZONE UNIT

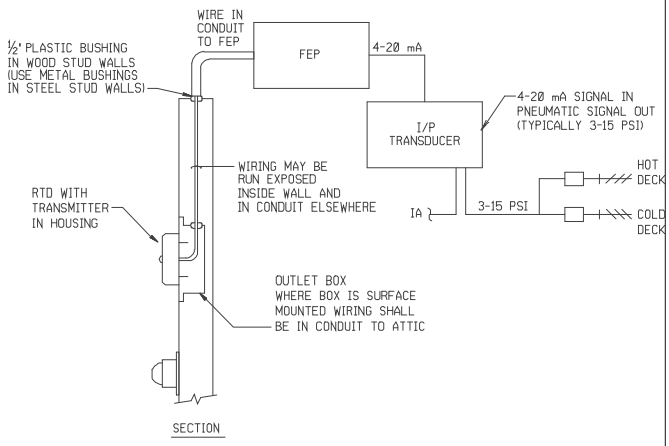

ANALOG OUTPUT ZONE DAMPER CONTROL FOR MULTIZONE UNIT

DETAIL M-83

DIM M84 HIGH HUMIDITY SWITCH, DUCT

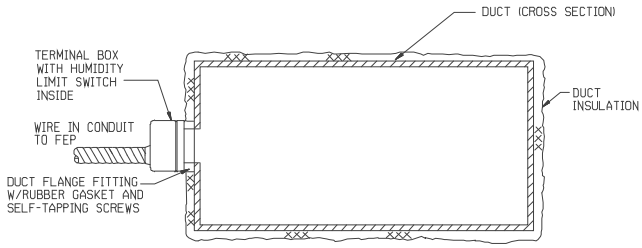

DUCT HIGH HUMIDITY SWITCH INSTALLATION

DETAIL M-84

AIT M85

TEMPERATURE SENSOR, COOLING TOWER BASIN

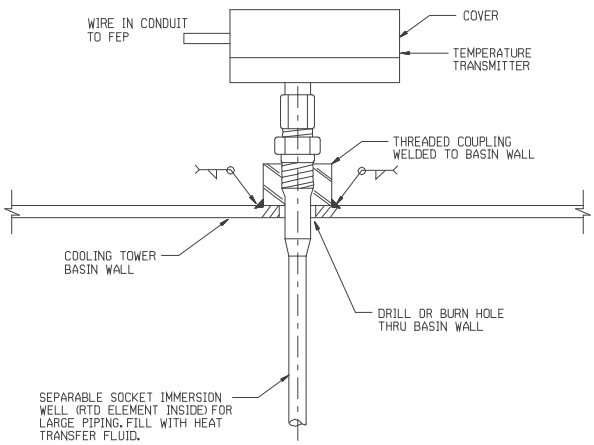

COOLING TOWER BASIN
TEMPERATURE SENSOR

DETAIL M-85

RESERVED