PART 3. ELECTRICAL DETAILS

Table of Contents

Name of Drawing or Detail — Page

Existing 2 Wire Single Phase Meter w\New Pulse Initiator (Detail E-1) B-17
Existing 3 Phase Meter w\New Pulse Initiator (Detail E-2) B-17
Existing 3 Phase Meter w\New Pulse Initiator, CTs & PTs at Substation (Detail E-3) B-17
New 2 Wire Single Phase Meter w\New Pulse Initiator (Detail E-4) B-17
New 3 Phase Meter w\New Pulse Initiator (Detail E-5) B-17
New 3 Phase Meter w\New Pulse Initiator, CTs & PTs at Substation (Detail E-6) B-17
Current Sensing Relay (Detail E-7) B-18
Current Sensing Transducer (Detail E-8) B-18
Transfer Switch Interface (Detail E-9) B-18
Remote Location Power Supply – 120 or 240 Volt Single Phase (Detail E-10) B-18
Remote Location Power Supply – Medium Voltage (Detail E-11) B-18
Remote Location Power Supply – High Voltage (Detail E-12) B-18
Electrical Metering Installation Building Entrance Only (Detail E-13) B-19
102V Power Connection to FEP (Detail E-14) B-19
Relay\Contactor Enclosure (Detail E-15) B-19
Typical Outdoor Grounding (Detail E-16) B-19
Ground Rod Connection (Detail E-17) B-19
Local Alarm Panel (Detail E-18) B-19
Watt Transducer for 3 Phase, 4 Wire Wye System (Detail E-19) B-20
Watt Hour Transducer for 3 Phase, 4 Wire Wye System (Detail E-20) B-20
Watt Transducer for 3 Phase, 3 Wire Delta System (Detail E-21) B-20
Watt Hour Transducer for 3 Phase, 3 Wire Delta System (Detail E-22) B-20
VAR Transducer for 3 Phase, 4 Wire Wye System (Detail E-23) B-20
VAR Transducer for 3 Phase, 3 Wire Delta System (Detail E-24) B-20
Existing 3 Wire Single Phase Meter w\New Pulse Initiator (Detail E-25) B-21
New 3 Wire Single Phase Meter w\New Pulse Initiator (Detail E-26) B-21
Existing Power Meter w\Existing Pulse Initiator (Detail E-27) B-21
Phase Angle Transducer for 3 Phase, 4 Wire Wye System (Detail E-28) B-21
Power Factor Transducer for 3 Phase, 4 Wire Wye System (Detail E-29) B-21
Current Transducer (Detail E-30) B-21
Voltage Transducer (Detail E-31) B-22
Typical Metering Arrangement for 3 Phase, 4 Wire Wye System (Detail E-32) B-22
Typical Metering Arrangement for 3 Phase, 3 Wire Delta System (Detail E-33) B-22
Watt Transducer for Single Phase (Detail E-34) B-22
Watt Hour Transducer for Single Phase (Detail E-35) B-22
Existing Power Meter w\Existing KYZ Contacts (Detail E-36) B-22
3 Phase Current Transducer (Detail E-37) B-23
3 Phase Voltage Transducer (Detail E-38) B-23

DIJ E1

POWER METER, EXISTING 2 WIRE SINGLE PHASE
W/NEW PULSE INITIATOR (UNDER 600V)

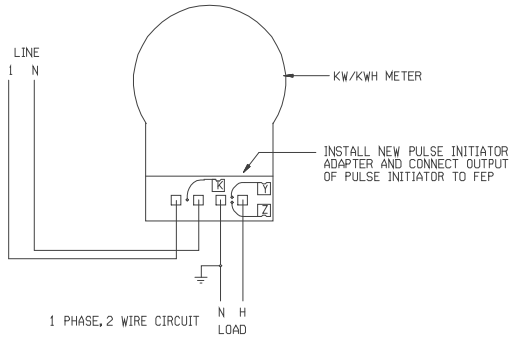

EXISTING 2 WIRE SINGLE PHASE METER W/NEW PULSE INITIATOR

DETAIL E-1

DIJ E2

POWER METER, EXISTING 3 PHASE
W/NEW PULSE INITIATOR (UNDER 600V)

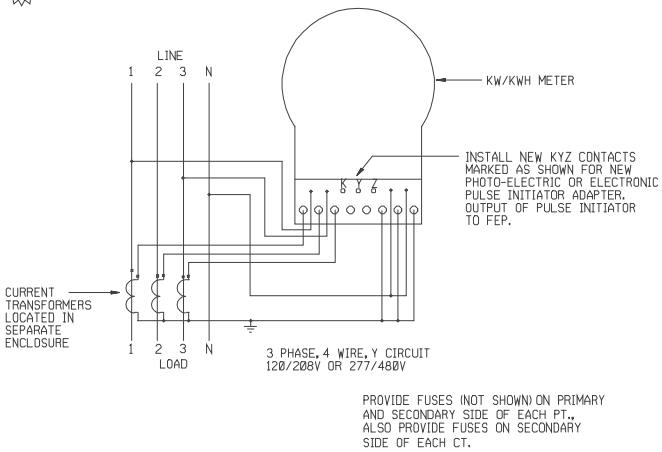

EXISTING 3 PHASE METER W/NEW PULSE INITIATOR

DETAIL E-2

DIJ E3

POWER METER, EXISTING 3 PHASE
W/NEW PULSE INITIATOR (OVER 600V)

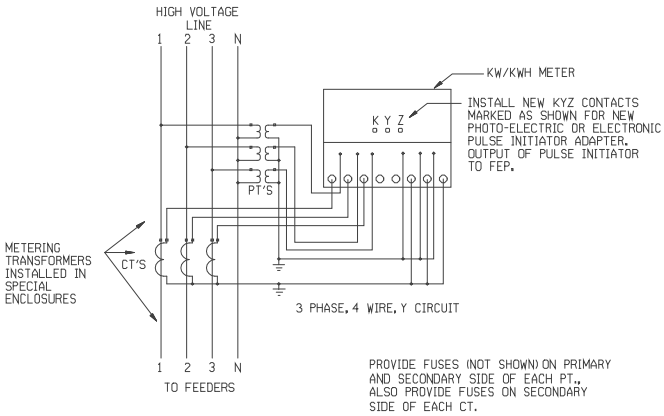

EXISTING 3 PHASE METER W/NEW PULSE INITIATOR, CTs, & PTs AT SUBSTATION

DETAIL E-3

DIJ E4

POWER METER, NEW 2 WIRE SINGLE PHASE
W/NEW PULSE INITIATOR (UNDER 600V)

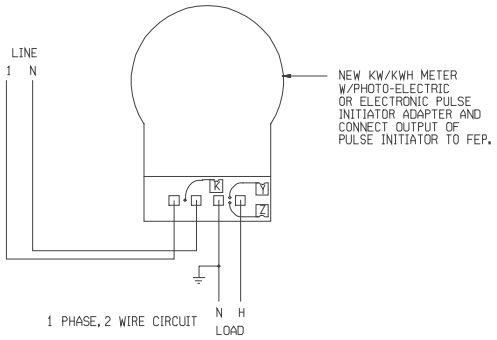

NEW 2 WIRE SINGLE PHASE METER W/NEW PULSE INITIATOR

DETAIL E-4

DIJ E5

POWER METER, NEW 3 PHASE
W/NEW PULSE INITIATOR (UNDER 600V)

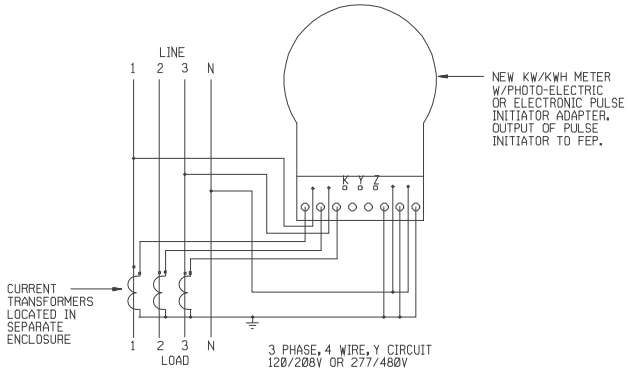

NEW 3 PHASE METER W/NEW PULSE INITIATOR

DETAIL E-5

DIJ E6

POWER METER, NEW 3 PHASE
W/NEW PULSE INITIATOR (OVER 600V)

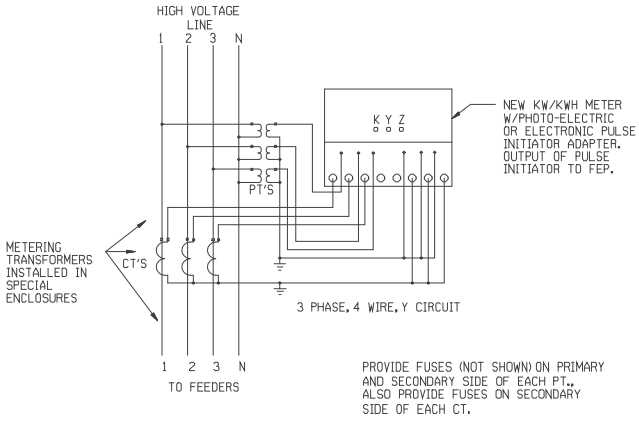

NEW 3 PHASE METER W/NEW PULSE INITIATOR, CTs, & PTs AT SUBSTATION

DETAIL E-6

DIJ E7 CURRENT SENSING RELAY

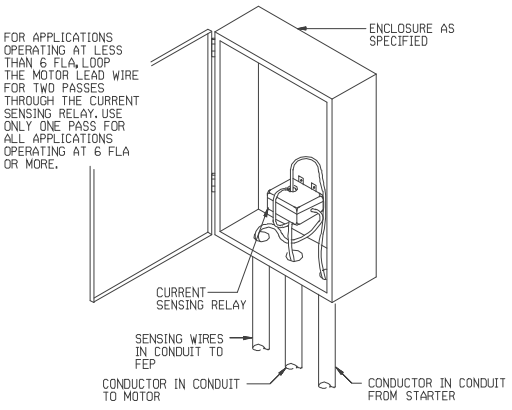

CURRENT SENSING RELAY

DETAIL E-7

AIJ E8 CURRENT SENSING TRANSDUCER

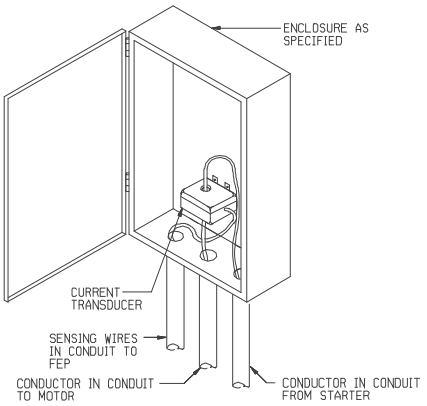

CURRENT SENSING TRANSDUCER

DETAIL E-8

DIX E9 TRANSFER SWITCH INTERFACE

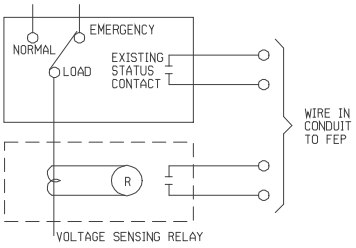

TRANSFER SWITCH INTERFACE

DETAIL E-9

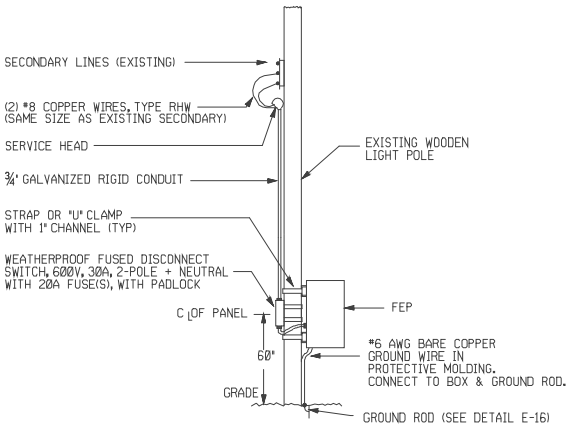

REMOTE LOCATION POWER SUPPLY- 120 OR 240 VOLT SINGLE PHASE

DETAIL E-10

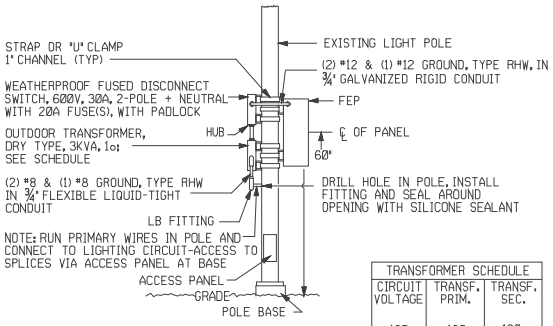

TRANSFORMER SCHEDULE		
CIRCUIT VOLTAGE	TRANSF. PRIM.	TRANSF. SEC.
480	480	120
277	277	120
120	NONE	NONE

REMOTE LOCATION POWER SUPPLY- MEDIUM VOLTAGE

DETAIL E-11

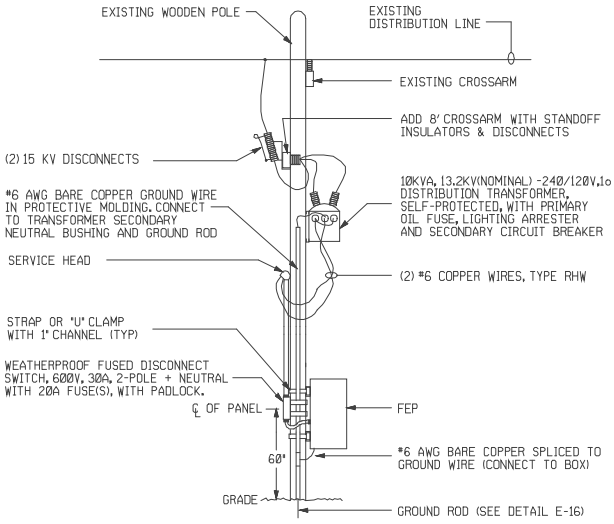

REMOTE LOCATION POWER SUPPLY- HIGH VOLTAGE

DETAIL E-12

DIJ E13 ELECTRICAL METERING INSTALLATION (UNDER 600V)

NOTE:
ALL ITEMS SHOWN ARE NEW EXCEPT MAIN DISCONNECT PANEL. TERMINAL BLOCKS

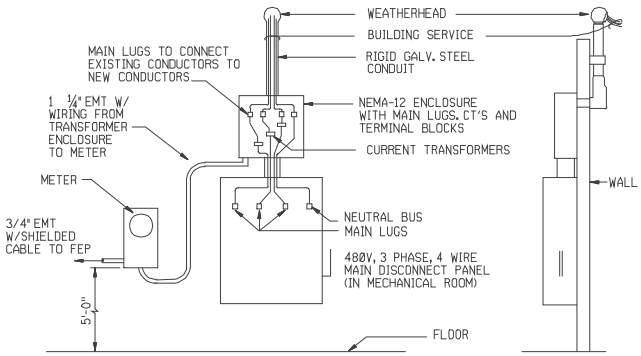

ELECTRIC METERING INSTALLATION BUILDING ENTRANCE ONLY

DETAIL E-13

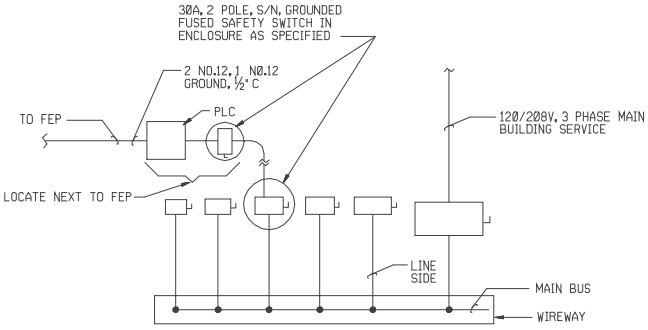

120V POWER CONNECTION TO FEP

DETAIL E-14

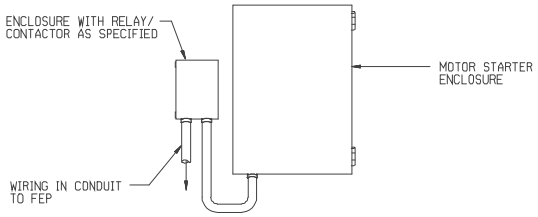

RELAY/CONTACTOR ENCLOSURE

DETAIL E-15

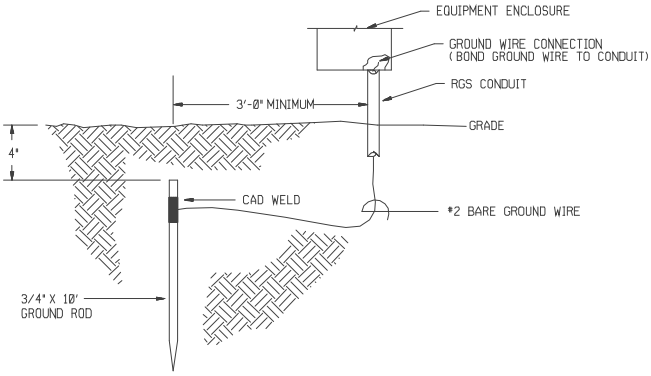

TYPICAL OUTDOOR GROUNDING

DETAIL E-16

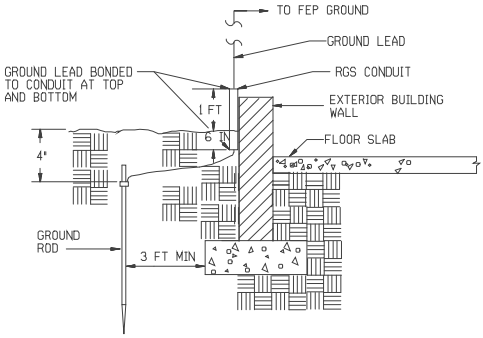

GROUND ROD CONNECTION

DETAIL E-17

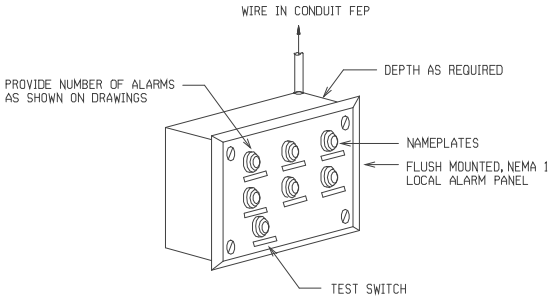

LOCAL ALARM PANEL

DETAIL E-18

AIJ E19 TRANSDUCER, WATT (3 PHASE, 4 WIRE WYE SYSTEM)

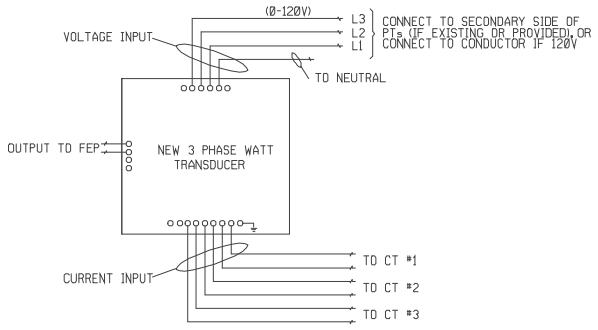

WATT TRANSDUCER FOR
3 PHASE, 4 WIRE WYE SYSTEM

DETAIL E-19

AIJ E20 TRANSDUCER, WATT HOUR (3 PHASE, 4 WIRE WYE SYSTEM)

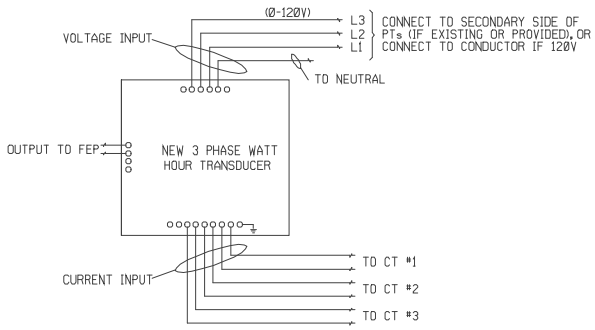

WATT HOUR TRANSDUCER FOR
3 PHASE, 4 WIRE WYE SYSTEM

DETAIL E-20

AIJ E21 TRANSDUCER, WATT (3 PHASE, 3 WIRE DELTA SYSTEM)

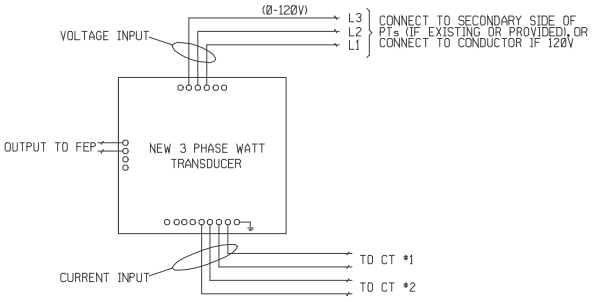

WATT TRANSDUCER FOR
3 PHASE, 3 WIRE DELTA SYSTEM

DETAIL E-21

AIJ E22 TRANSDUCER, WATT HOUR (3 PHASE, 3 WIRE DELTA SYSTEM)

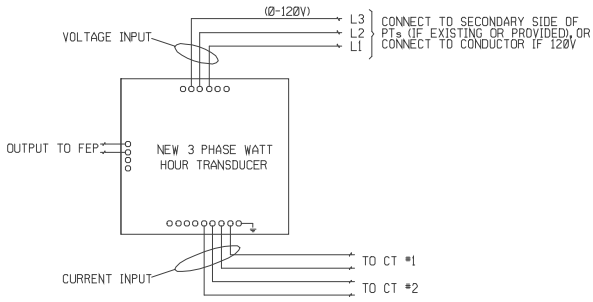

WATT HOUR TRANSDUCER FOR
3 PHASE, 3 WIRE DELTA SYSTEM

DETAIL E-22

AIJ E23 TRANSDUCER, VAR (3 PHASE, 4 WIRE WYE SYSTEM)

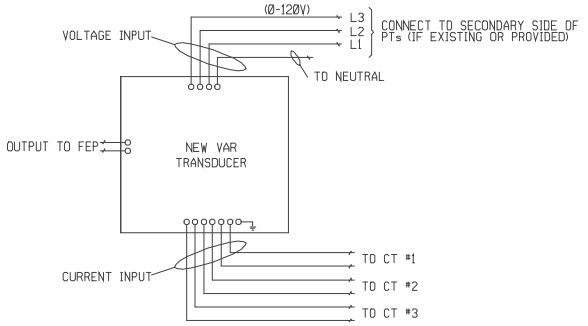

VAR TRANSDUCER FOR
3 PHASE, 4 WIRE WYE SYSTEM

DETAIL E-23

AIJ E24 TRANSDUCER, VAR (3 PHASE, 3 WIRE DELTA SYSTEM)

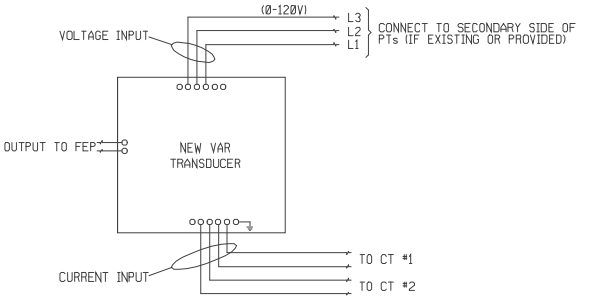

VAR TRANSDUCER FOR
3 PHASE, 3 WIRE DELTA SYSTEM

DETAIL E-24

D1J E25

POWER METER, EXISTING 3 WIRE SINGLE PHASE W/NEW PULSE INITIATOR (UNDER 600V)

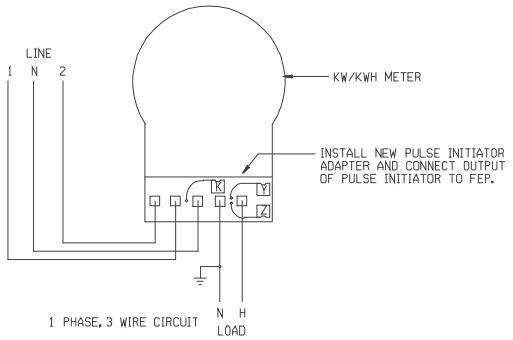

EXISTING 3 WIRE SINGLE PHASE METER W/NEW PULSE INITIATOR

DETAIL E-25

D1J E26

POWER METER, NEW 3 WIRE SINGLE PHASE W/NEW PULSE INITIATOR (UNDER 600V)

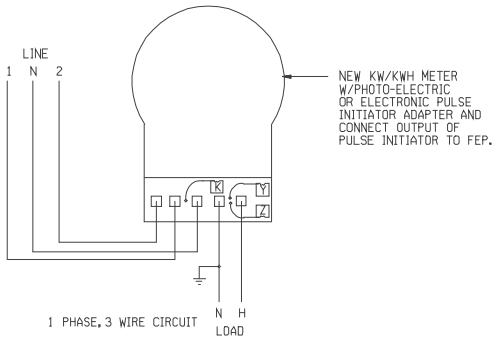

NEW 3 WIRE SINGLE PHASE METER W/NEW PULSE INITIATOR

DETAIL E-26

D1J E27

POWER METER, EXISTING W/EXISTING PULSE INITIATOR

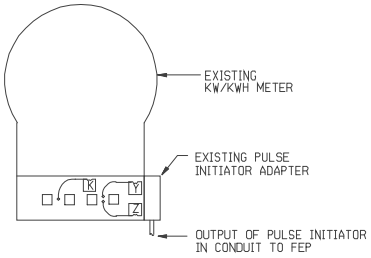

EXISTING POWER METER W/EXISTING PULSE INITIATOR

DETAIL E-27

A1J E28

TRANSDUCER, PHASE ANGLE

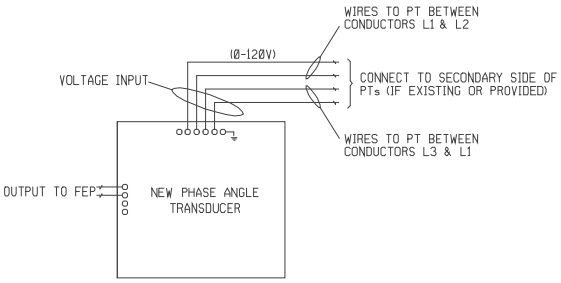

PHASE ANGLE TRANSDUCER FOR 3 PHASE, 4 WIRE WYE SYSTEM

DETAIL E-28

A1J E29

TRANSDUCER, POWER FACTOR

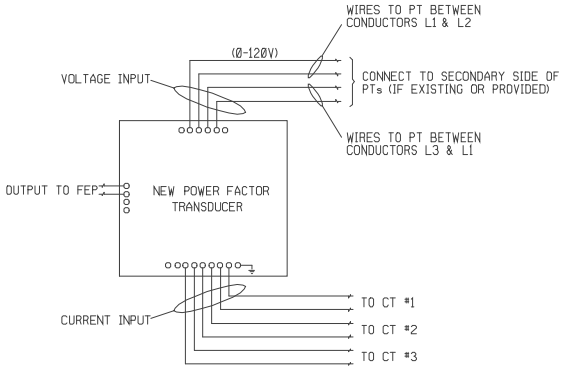

POWER FACTOR TRANSDUCER FOR 3 PHASE, 4 WIRE WYE SYSTEM

DETAIL E-29

A1J E30

TRANSDUCER, CURRENT

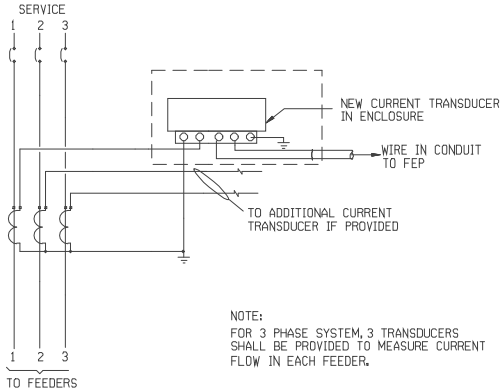

NOTE:
FOR 3 PHASE SYSTEM, 3 TRANSDUCERS SHALL BE PROVIDED TO MEASURE CURRENT FLOW IN EACH FEEDER.

CURRENT TRANSDUCER

DETAIL E-30

AIJ E31 TRANSDUCER, VOLTAGE

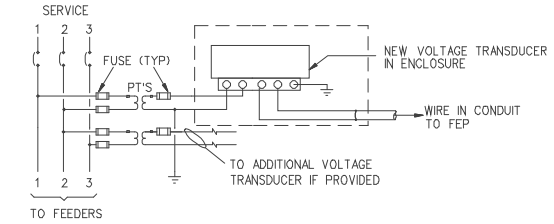

NOTE:
FOR 3 PHASE SYSTEM, 3 TRANSDUCERS SHALL BE PROVIDED TO MEASURE VOLTAGE OF EACH PHASE.

VOLTAGE TRANSDUCER

DETAIL E-31

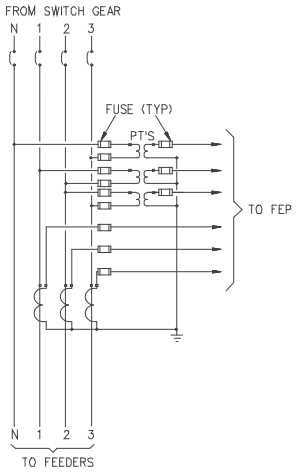

TYPICAL METERING ARRANGEMENT FOR 3 PHASE, 4 WIRE WYE SYSTEM

DETAIL E-32

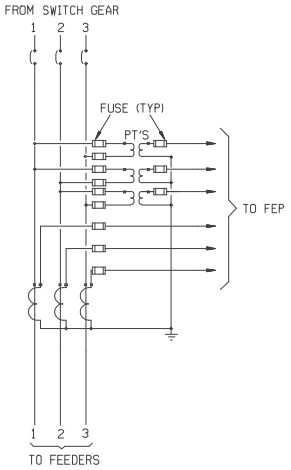

TYPICAL METERING ARRANGEMENT FOR 3 PHASE, 3 WIRE DELTA SYSTEM

DETAIL E-33

AIJ E34 TRANSDUCER, WATT (SINGLE PHASE)

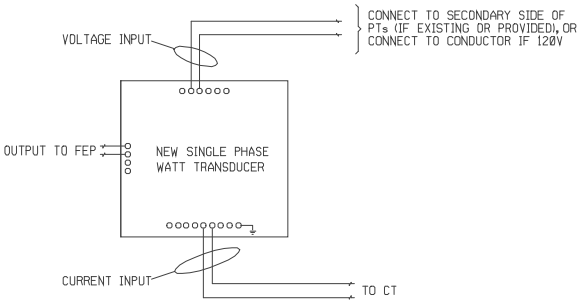

WATT TRANSDUCER FOR SINGLE PHASE

DETAIL E-34

AIJ E35 TRANSDUCER, WATT HOUR (SINGLE PHASE)

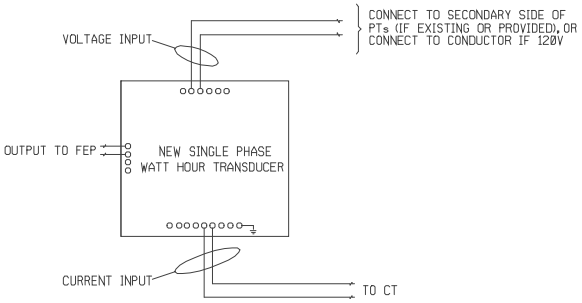

WATT HOUR TRANSDUCER FOR SINGLE PHASE

DETAIL E-35

DIJ E36 POWER METER, EXISTING W/EXISTING KYZ CONTACTS

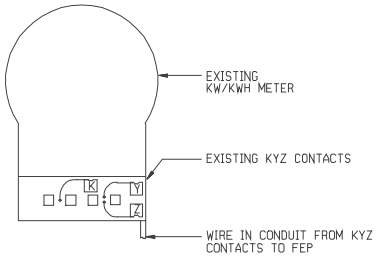

EXISTING POWER METER W/EXISTING KYZ CONTACTS

DETAIL E-36

AIJ E37 TRANSDUCER, NEW 3 PHASE CURRENT

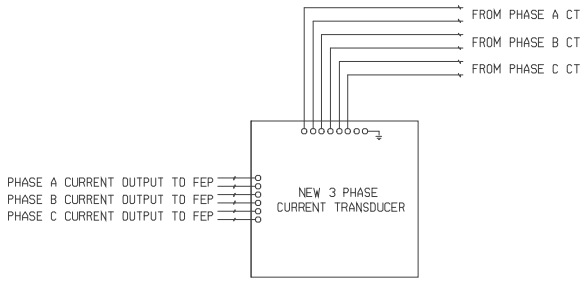

3 PHASE CURRENT TRANSDUCER

DETAIL E-37

AIJ E38 TRANSDUCER, NEW 3 PHASE VOLTAGE

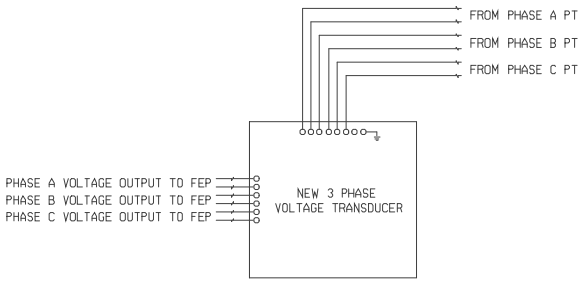

3 PHASE VOLTAGE TRANSDUCER

DETAIL E-38

NOTES: TYPICAL INSTALLATION DETAILS

1. SECURE TO CONCRETE FOUNDATION USING EXPANSION ANCHORS OR EMBEDDED ANCHOR BOLTS.

2. ATTACH RAIN/SUN SHIELD TO SUPPORT ANGLES WITH 1/4" STEEL HOT DIPPED GALAVNIZED NUTS AND BOLTS. CAULK OVER BOLTS TO PREVENT LEAKING. ALL STEEL SHAPES SHALL BE HOT DIPPED GALVANIZED.

3. RED LAMINATED WARNING PLATE SHALL BE MOUNTED ON ALL UMCS CONTROLLED EQUIPMENT IN A CONSPICUOUS PLACE, VISIBLE TO PEOPLE WHO WOULD BE NEAR MOVING PARTS ON THE EQUIPMENT. FASTEN PLATE ON SHEET METAL DUCT WITH MACHINE SCREWS. ON OTHER EQUIPMENT WITH VANDAL PROOF NUTS AND BOLTS. CONTRACTOR TO OBTAIN BUILDING AND TELEPHONE NUMBERS FROM THE CONTRACTING OFFICER. LETTERING HEIGHT OF WARNING SIGN (BESIDES HEADING) SHALL BE A MINIMUM OF ONE-HALF INCH.

4. MINIMUM CLEARANCE FOR FLOW METER IS 30". HEIGHT OF PIT ABOVE GRADE WILL VARY WITH DEPTH OF PIPE. PIPE SEAL DEPTHS VARY FROM 24" TO 72" FROM GRADE TO TOP OF PIPE.