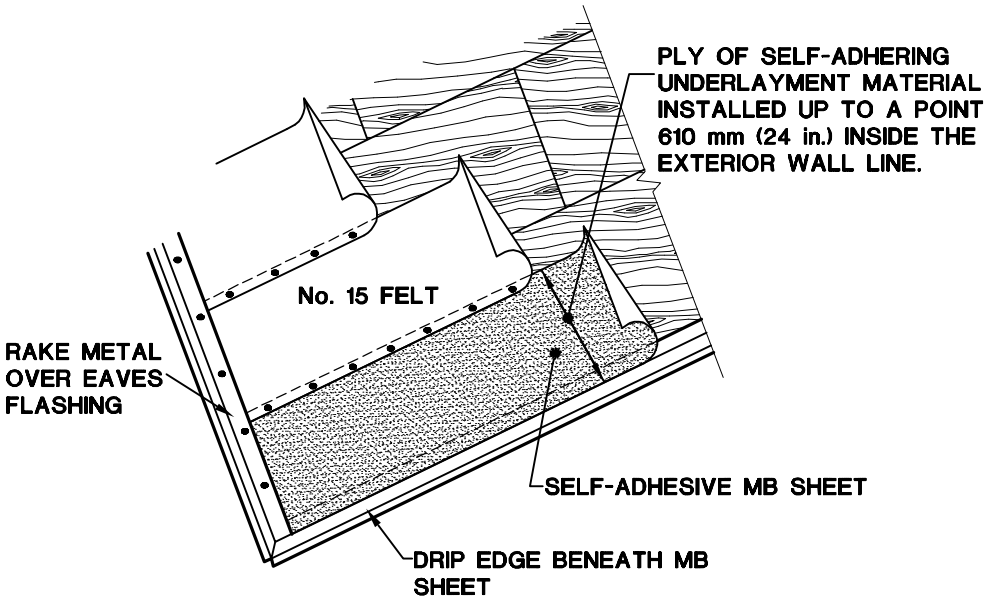

Figure 2-12a. Self-Adhesive Eaves Flashing

(Underlayment is sealed from eave to at least 610 mm (24 in.) within wall line)

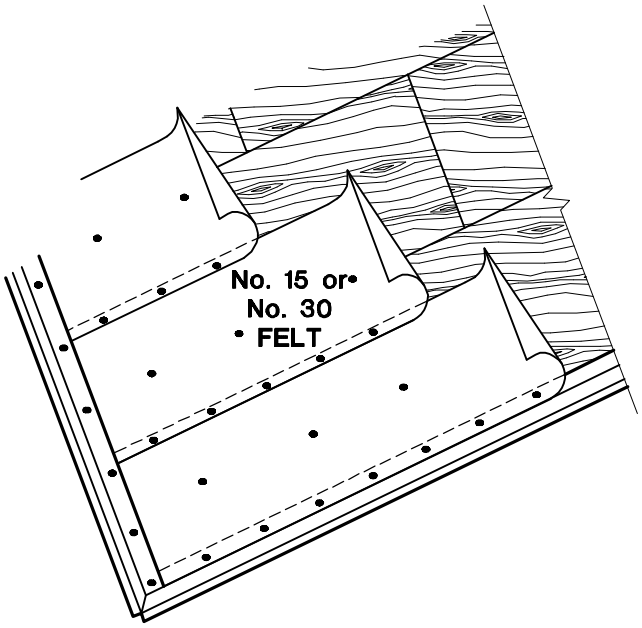

Figure 2-12b. Underlayment for Steep Roofing

(Underlay felt is unsealed)

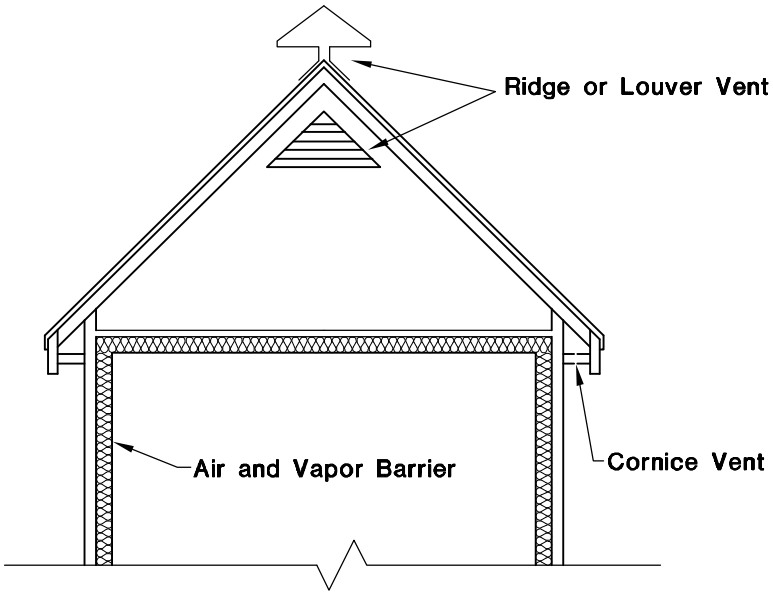

Figure 2-13. Vented Attic Space

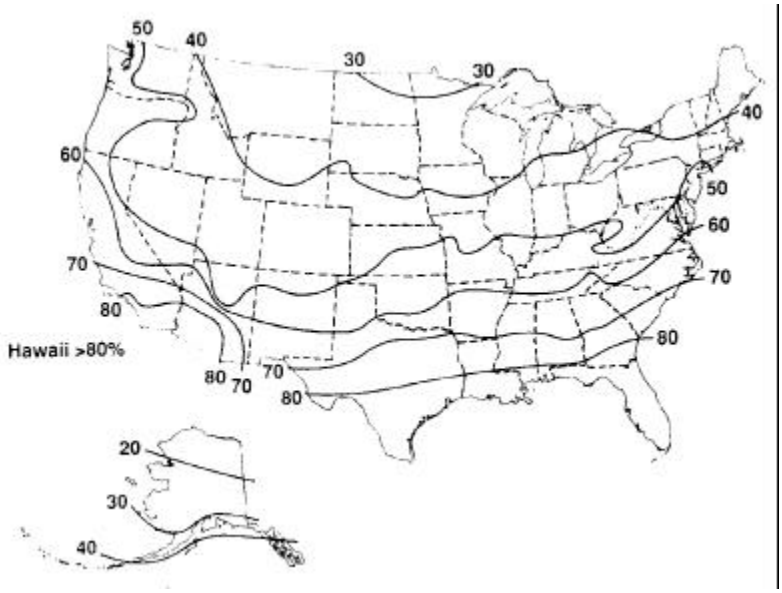

Figure 2-14a. Interior Relative Humidities (%) with Interior Temperature of 20°C (68°F)

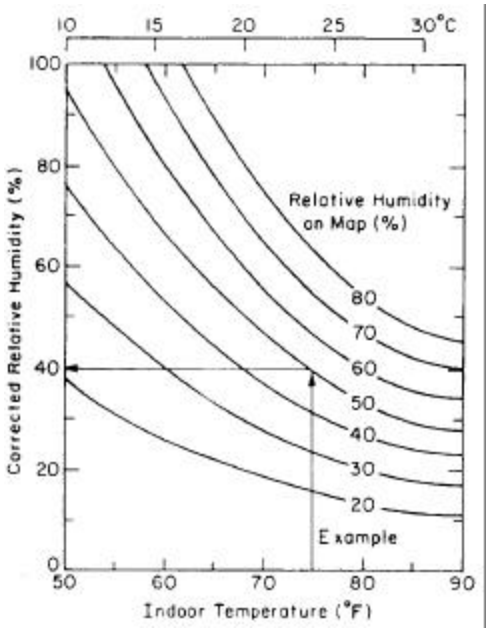

Notes:

1. If designed interior RH is expected to exceed the percentages shown in 2-14a, summer self-drying will be inadequate and vapor retarders should be used.

2. Use 2-14b to *correct* maximum RH for interior temperatures that differ from 60ºF.

Figure 2-14b. Temperature Conversion When Temperatures Differ From 20ºC (68ºF)

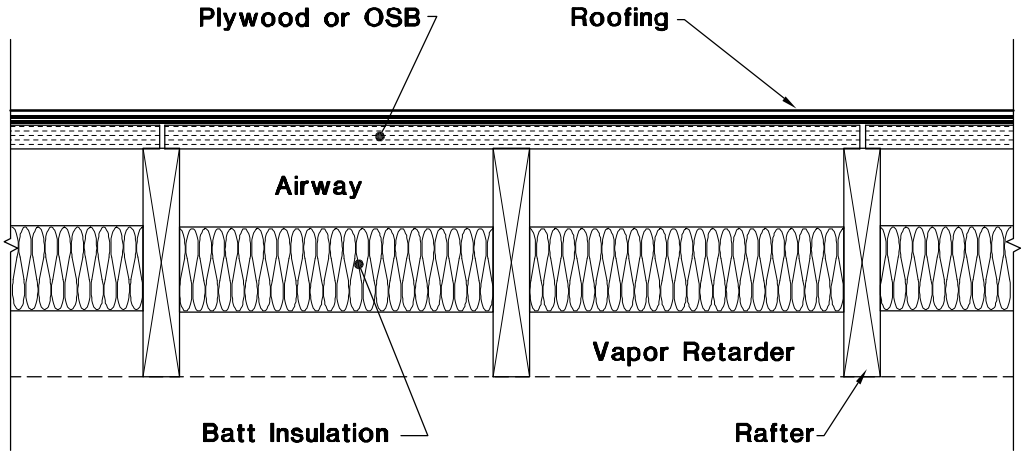

Figure 2-15. Under Deck Insulation

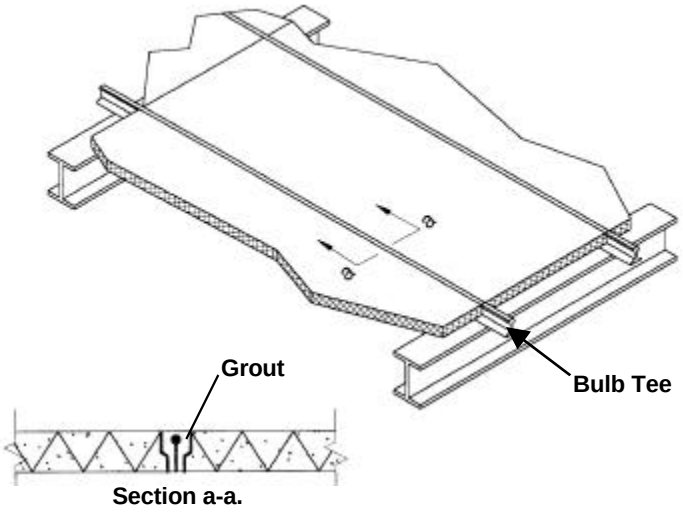

Figure 2-16. Self-Insulating Roof Deck

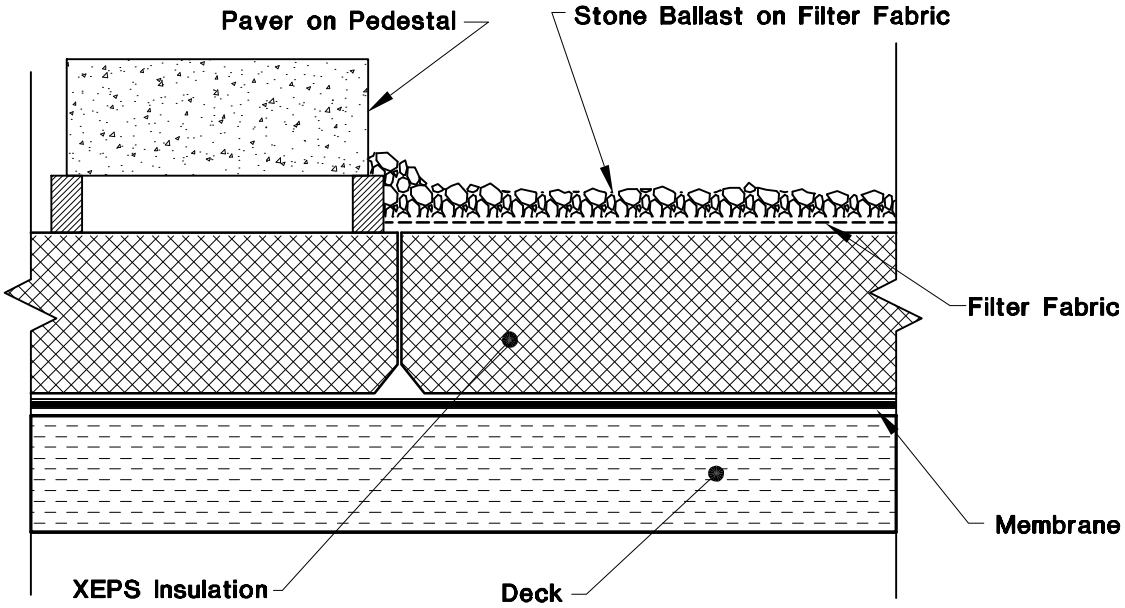

Note: Because the membrane is on the warm side of the insulation, it also serves as a vapor retarder.

Figure 2-17. Protected Roof Membrane System (PMR)

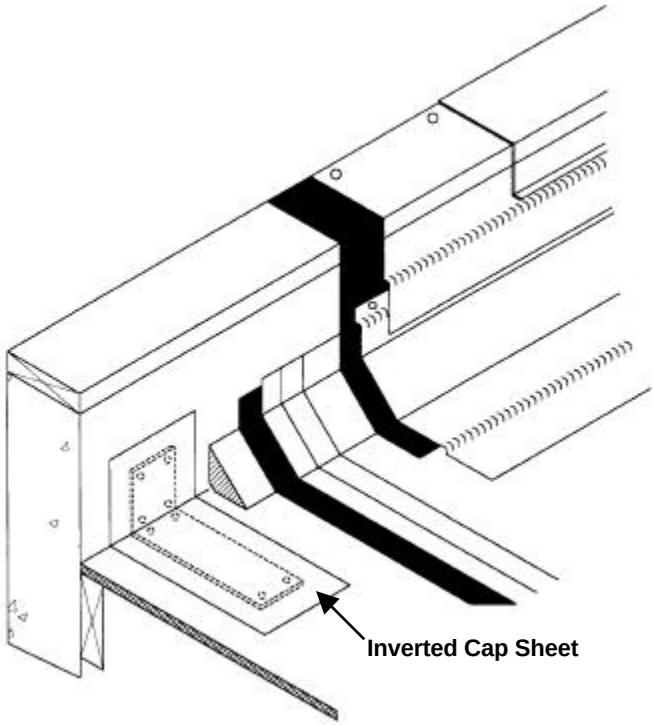

Figure 2-18. Roofing Over Thick Seismic Strap