# APPENDIX G

## MASONRY VENEER / STEEL STUD WALLS (NONBEARING CONSTRUCTION)

List of Drawings

| Title | Drawing No |
|---|---|
| Wall Anchors | |
| Wire Anchors | 1.1 |
| Wire Anchor, Details | 1.2 |
| Wire Anchor with Continuous Brick Joint Reinforcement | 1.3 |
| Pintle Anchor | 1.4 |
| Wall Sections | |
| Typical Brick Veneer and Steel Stud Panel Wall | 2.1 |
| Adjustable Wall Anchor Detail | 2.2 |
| Masonry Veneer Steel Stud Panel Wall | |
| Plan View | 2.3.1 |
| Foundation Wall Section | 2.3.2 |
| Structural Steel Section | 2.3.3 |
| Reinforced Concrete Section | 2.3.4 |
| Steel Joist Section | 2.3.5 |
| Slip Joint Details | |
| Typical Single Track | 3.1 |
| Typical Double Track | 3.2 |
| Parapet Slide Clip | 3.3 |
| Bottom Connection | |
| Track Anchored to Concrete | 4.1 |
| Expansion Joints | |
| Brick or CMU Veneer Joint | 5.1 |

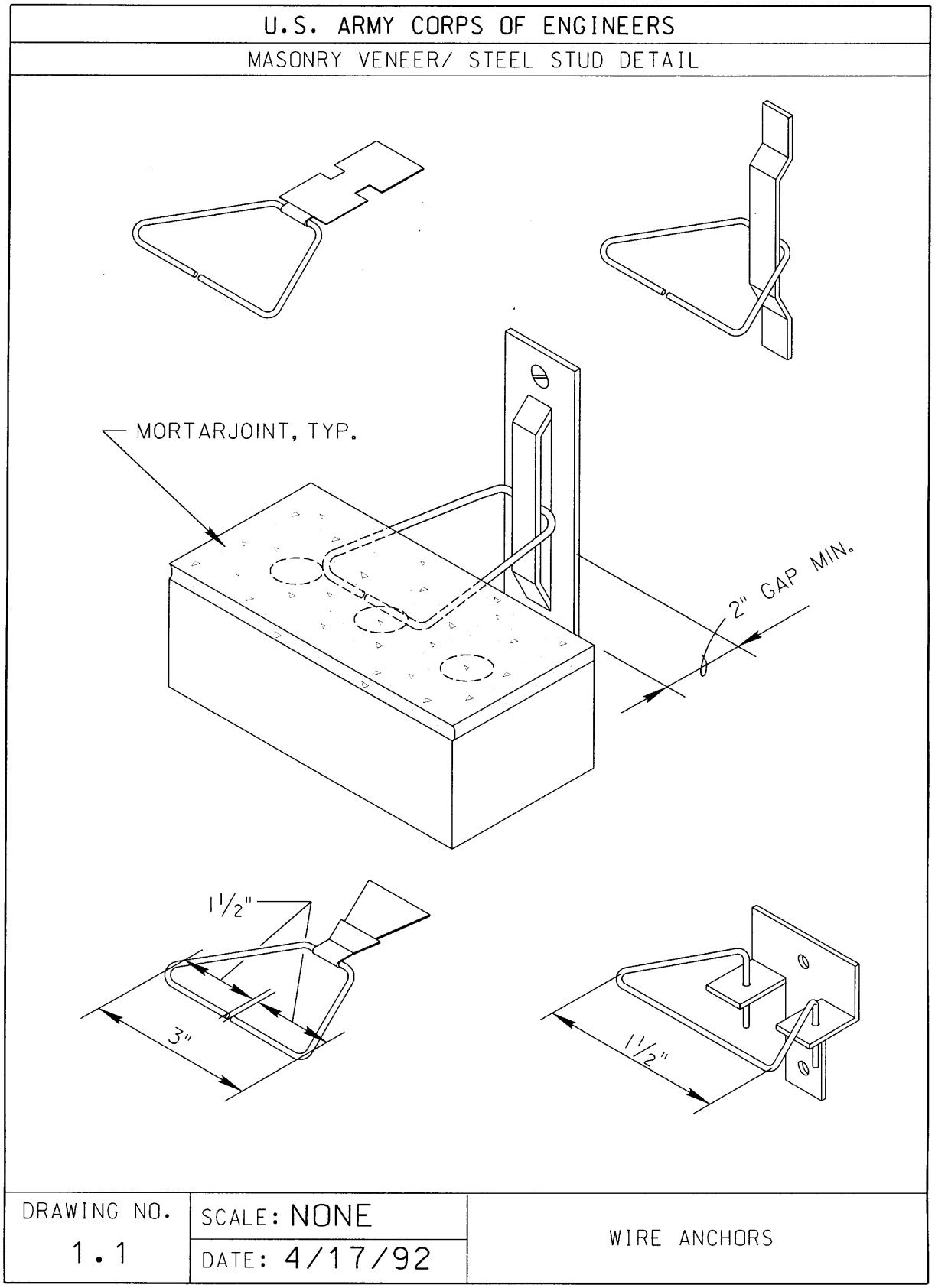


Figure G-1. Wire Anchors

U.S. ARMY CORPS OF ENGINEERS

MASONRY VENEER/ STEEL STUD DETAIL

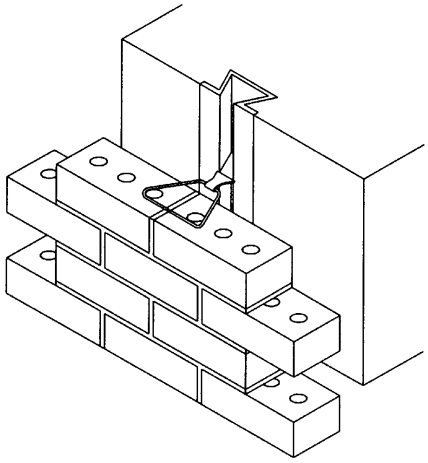

A) CONCRETE BACK-UP

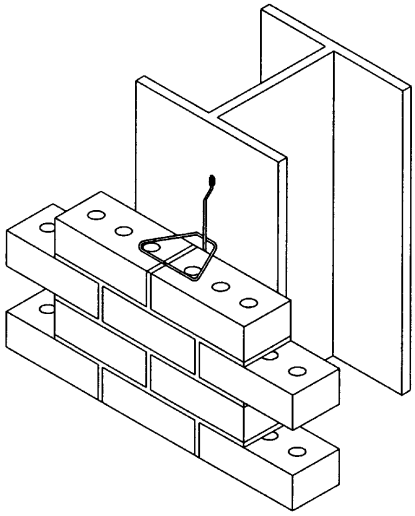

B) STRUCTURAL STEEL BACK-UP

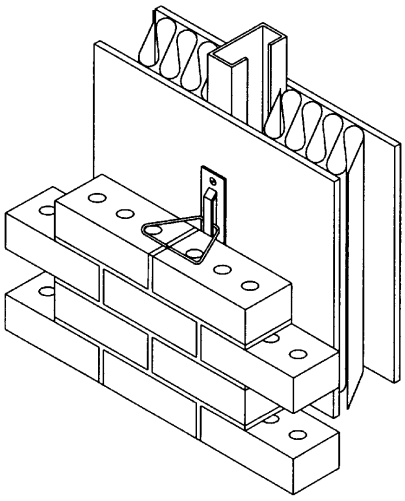

C) STEEL STUD BACK-UP

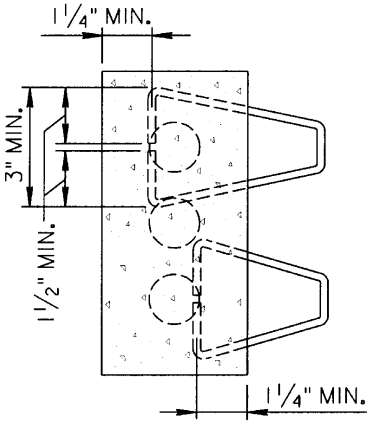


TIE PLACEMENT DETAIL

| DRAWING NO. | SCALE: NONE | WIRE ANCHOR, DETAILS |
|---|---|---|
| 1.2 | DATE: 4/17/92 | |

Figure G-2. Wire Anchor, Details

U.S. ARMY CORPS OF ENGINEERS

MASONRY VENEER/ STEEL STUD DETAIL

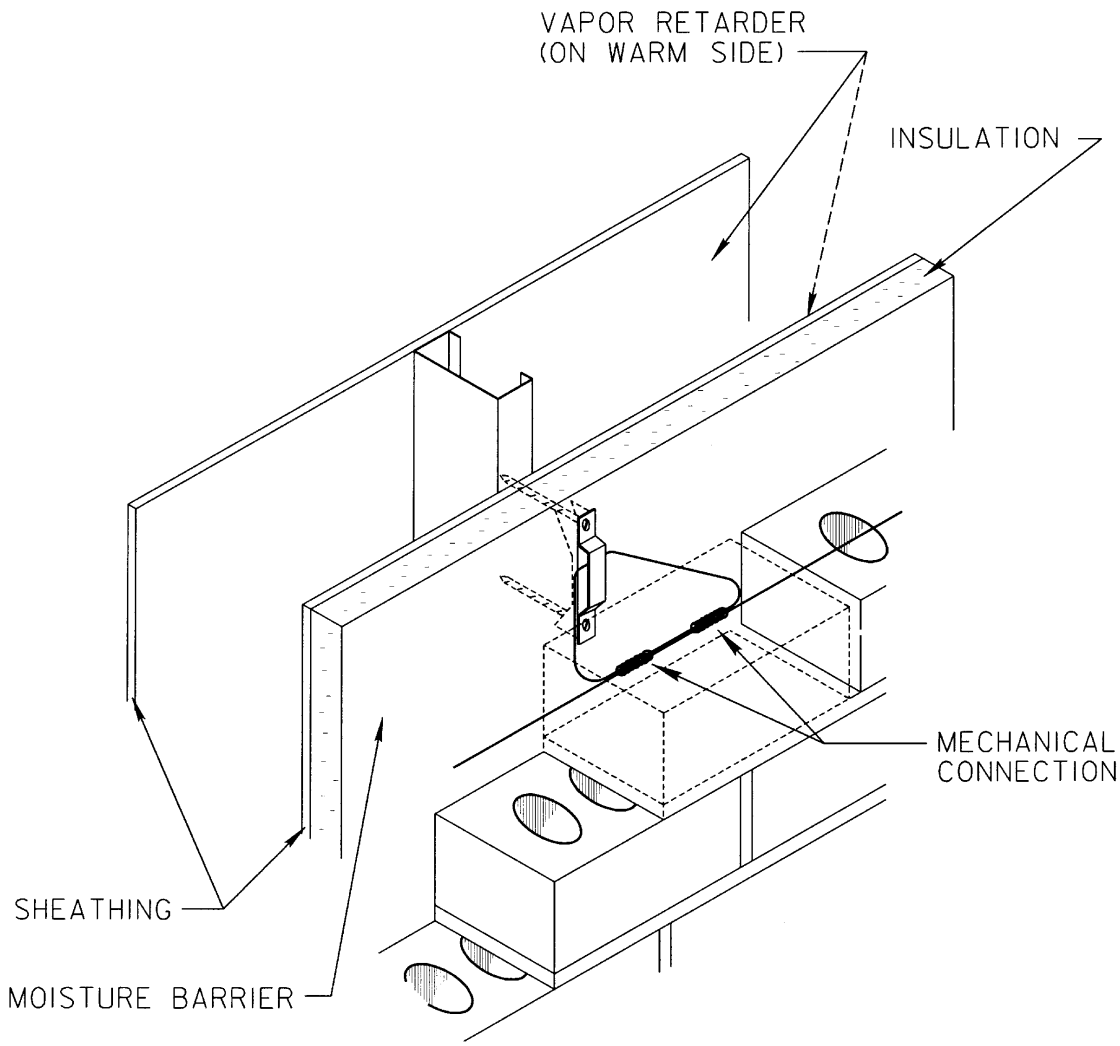


JOINT REINFORCEMENT IN THE SAME COURSE AS THE ANCHOR WILL BE MECHANICALLY CONNECTED AND MAY DIFFER FROM THAT SHOWN.

| DRAWING NO. | SCALE: NONE | WIRE ANCHOR WITH CONTINUOUS BRICK JOINT REINFORCEMENT |
|---|---|---|
| 1.3 | DATE: 4/17/92 | |

Figure G-3. Wire Anchor with Continuous Brick Joint Reinforcement

U.S. ARMY CORPS OF ENGINEERS

MASONRY VENEER/ STEEL STUD DETAIL

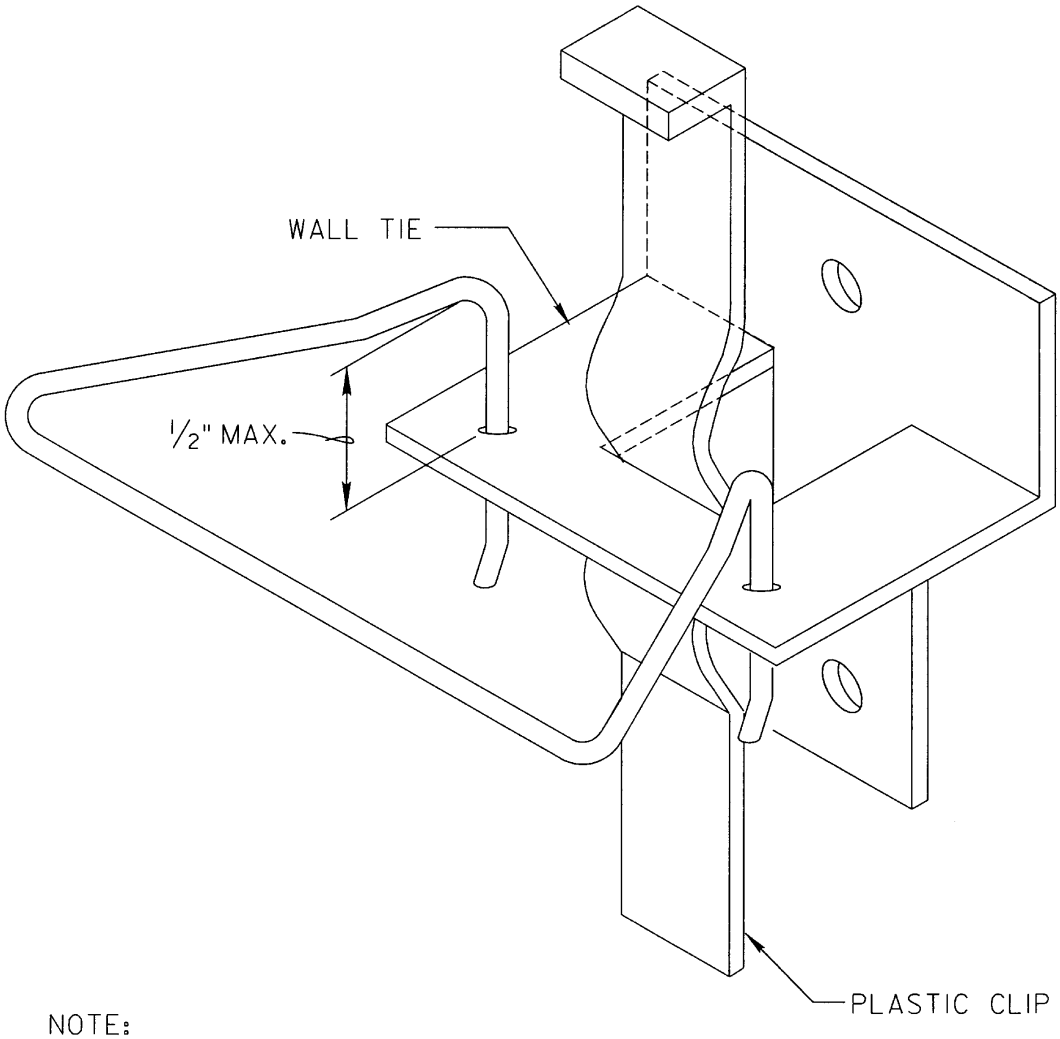


NOTE:
PLASTIC CLIP IS USED TO HOLD
1" INSULATION OVER MOISTURE
BARRIER

| DRAWING NO. | SCALE: NONE | PINTLE ANCHOR |
|---|---|---|
| 1.4 | DATE: 4/17/92 | |

Figure G-4. Pintle Anchor

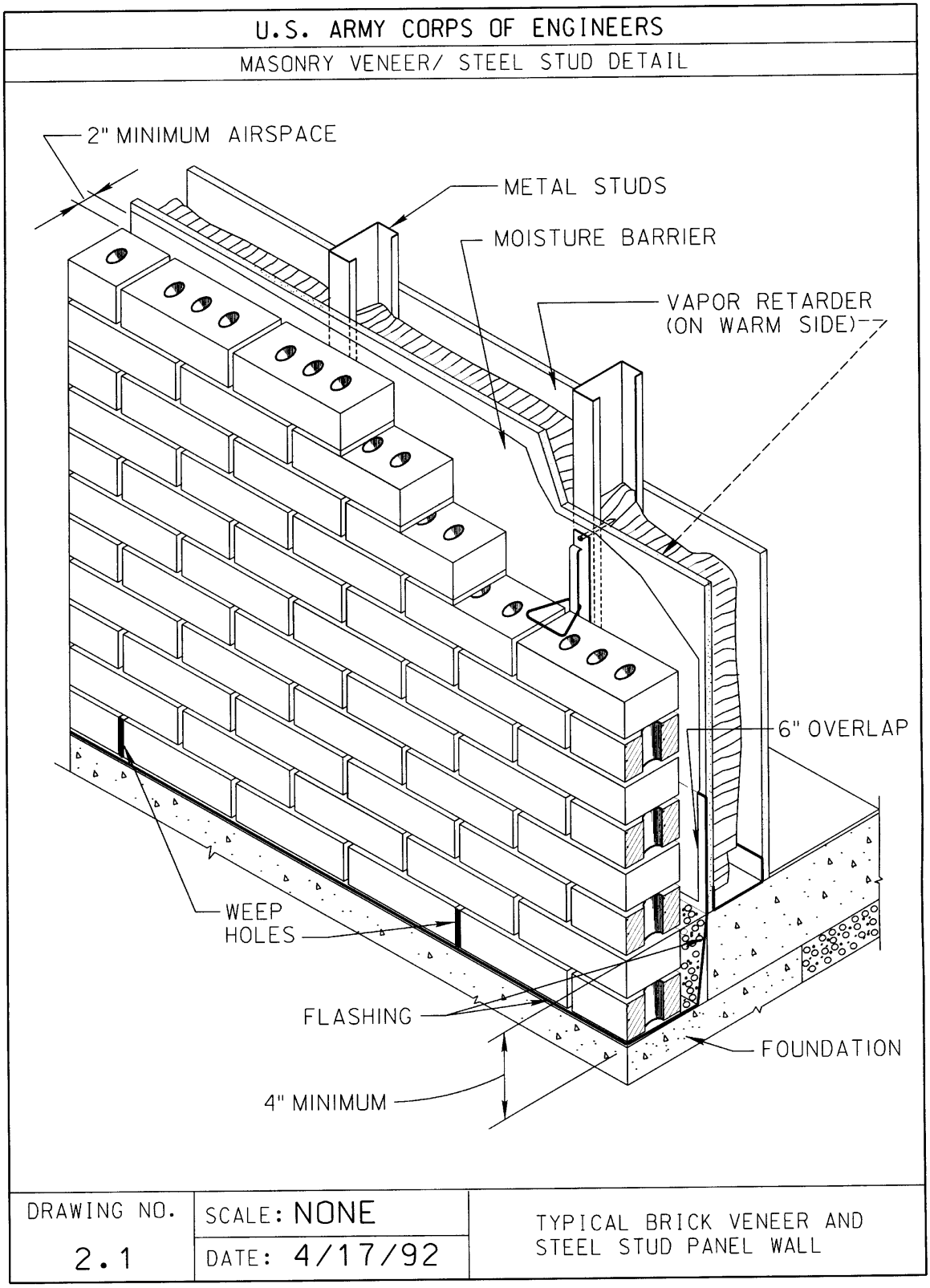


Figure G-5. Typical Brick Veneer and Steel Stud Panel Wall

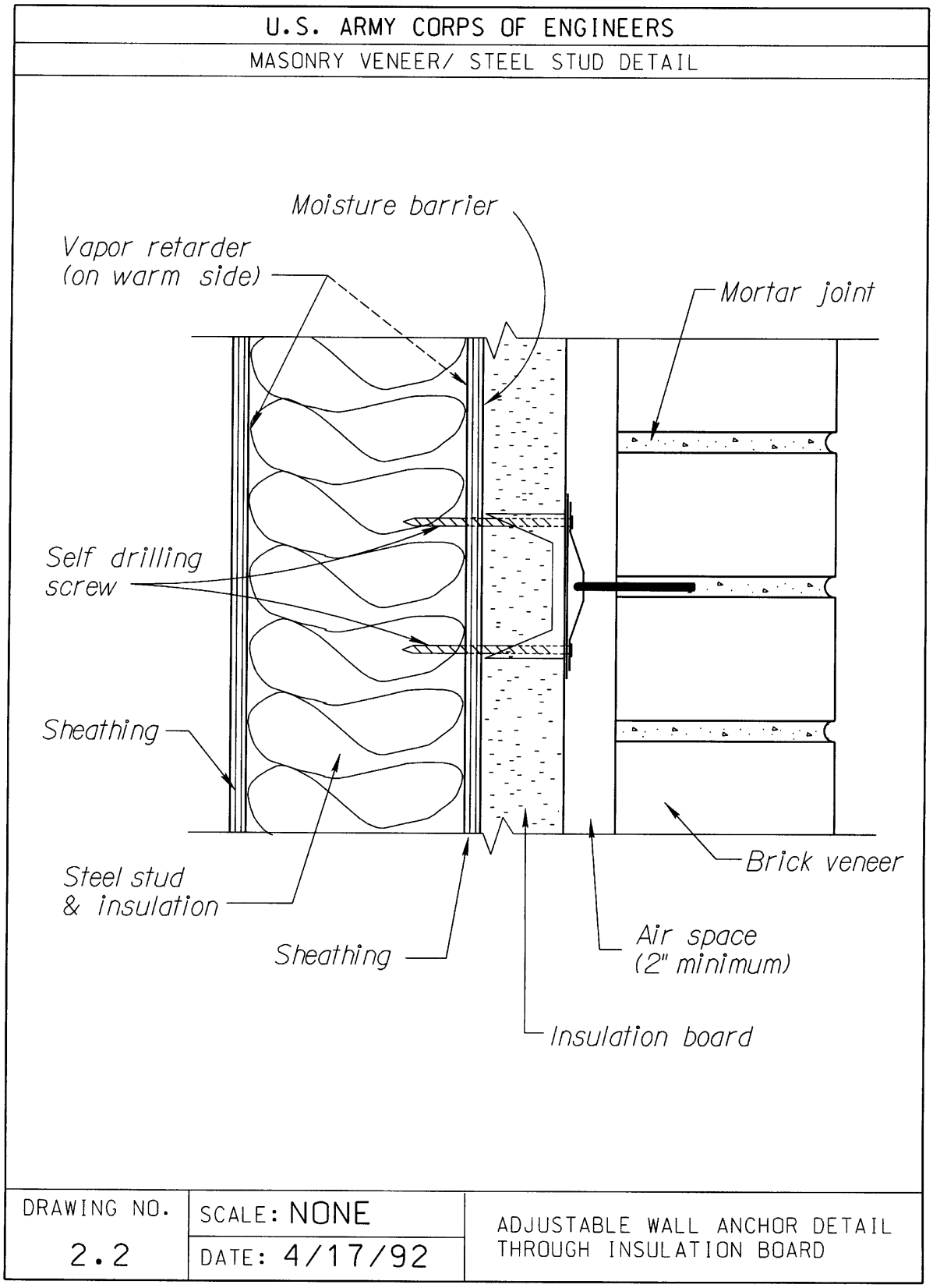


Figure G-6. Adjustable Wall Anchor Detail

U.S. ARMY CORPS OF ENGINEERS

MASONRY VENEER/ STEEL STUD DETAIL

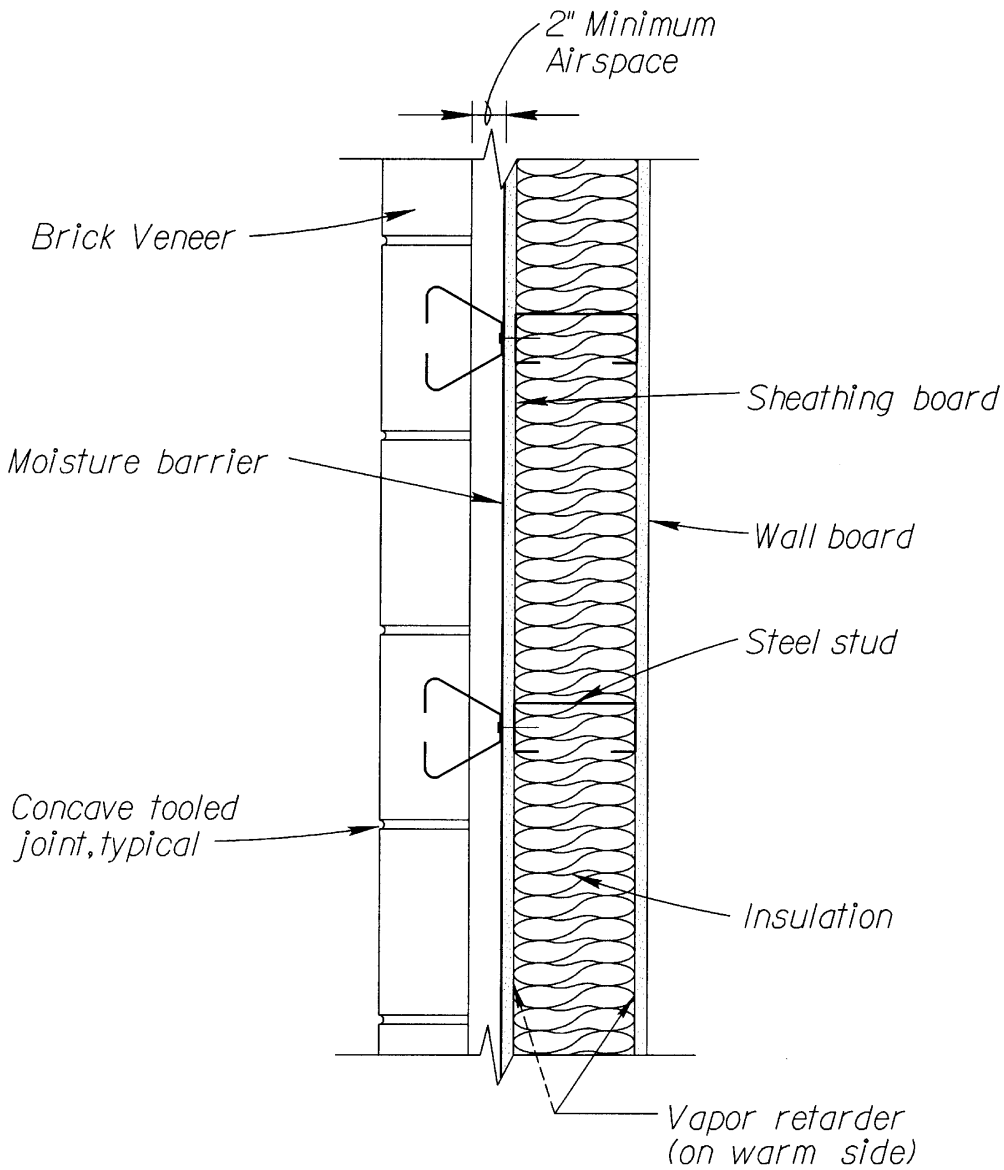


| DRAWING NO. | SCALE: 1 1/2" = 1' | ANCHORED VENEER TO STEEL STUD WALL, PLAN VIEW |
|---|---|---|
| 2.3.1 | DATE: 4/17/92 | |

Figure G-7. Masonry Veneer Steel Stud Panel Wall, Plan View

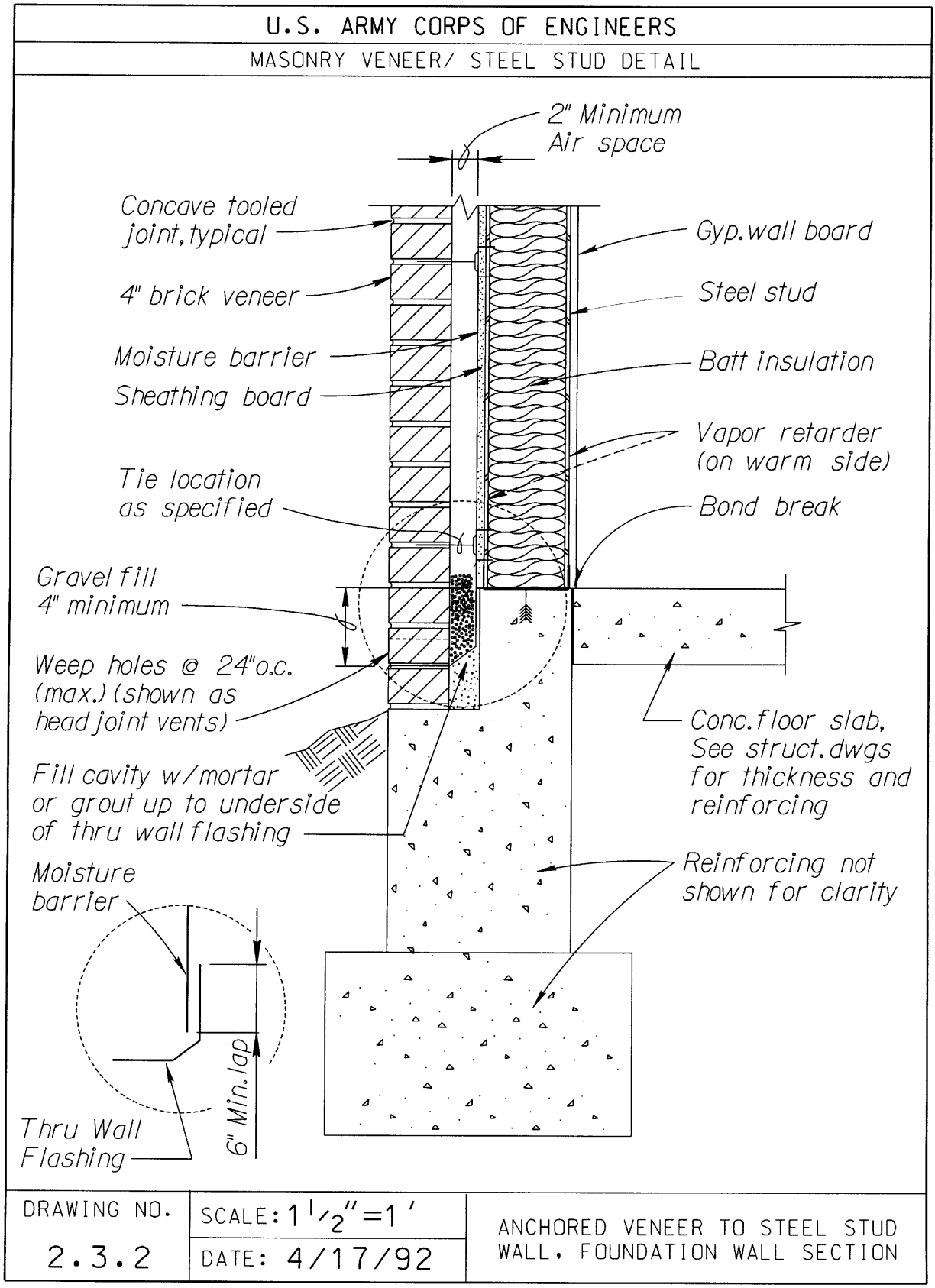


Figure G-8. Masonry Veneer Steel Stud Panel Wall, Foundation Wall Section

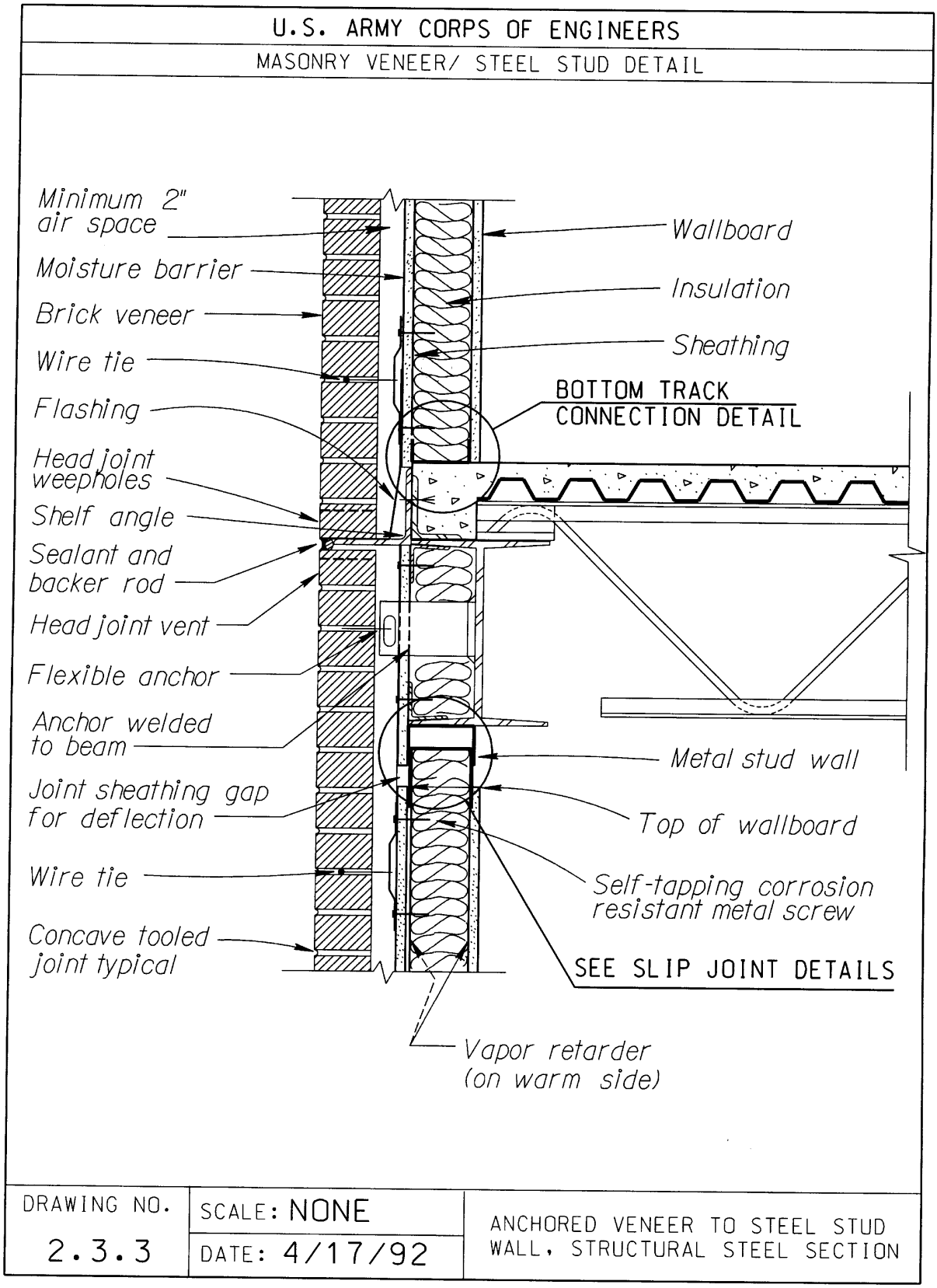


Figure G-9. Masonry Veneer Steel Stud Panel Wall, Structural Steel Section

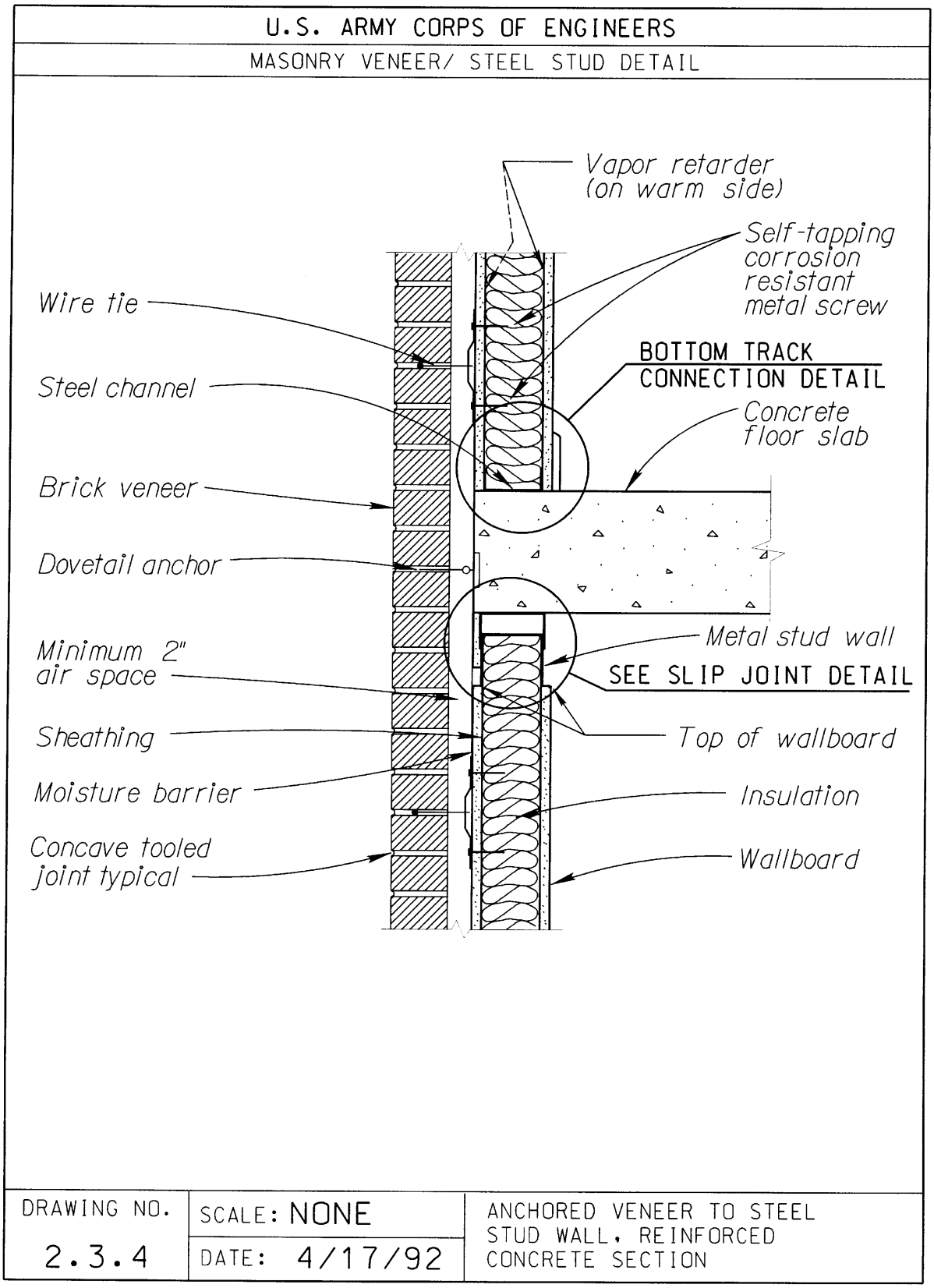


Figure G-10. Masonry Veneer Steel Stud Panel Wall, Reinforced Concrete Section

U.S. ARMY CORPS OF ENGINEERS

MASONRY VENEER/ STEEL STUD DETAIL

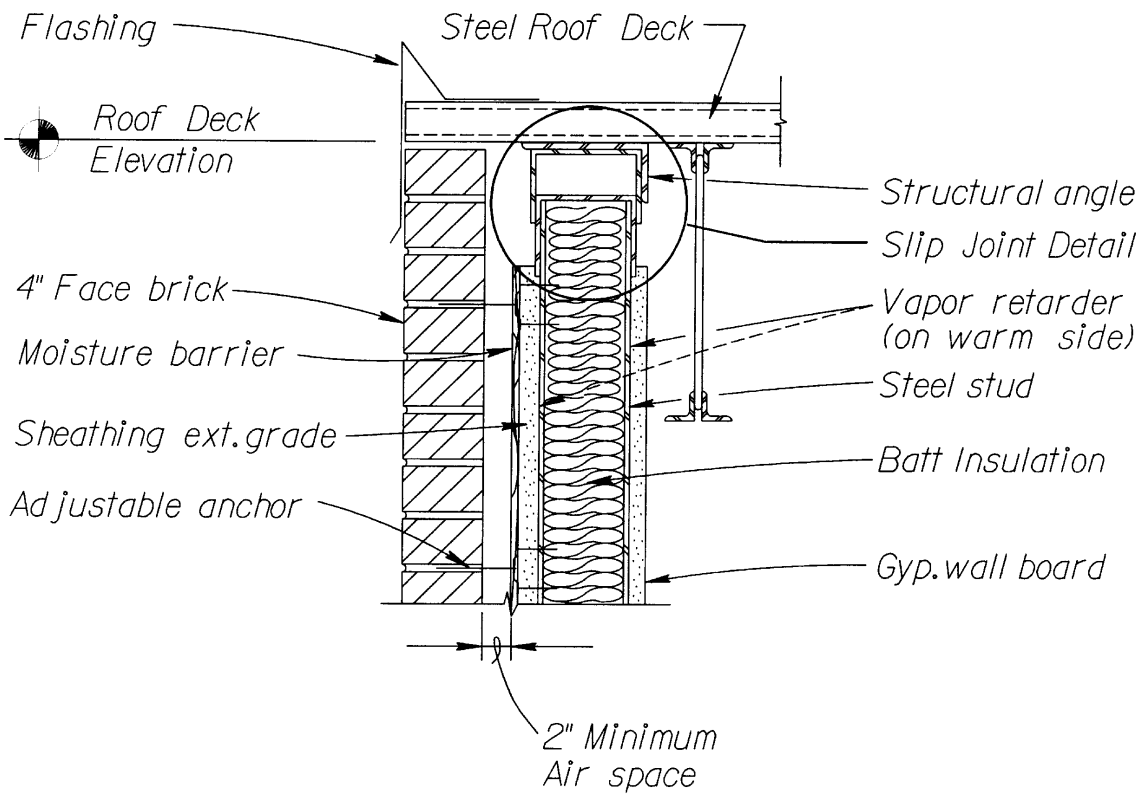


| DRAWING NO. | SCALE: $1\frac{1}{2}''=1'$ | ANCHORED VENEER TO STEEL STUD WALL, STEEL JOIST SECTION |
|---|---|---|
| 2.3.5 | DATE: 4/17/92 | |

Figure G-11. Masonry Veneer Steel Stud Panel Wall, Steel Joist Section

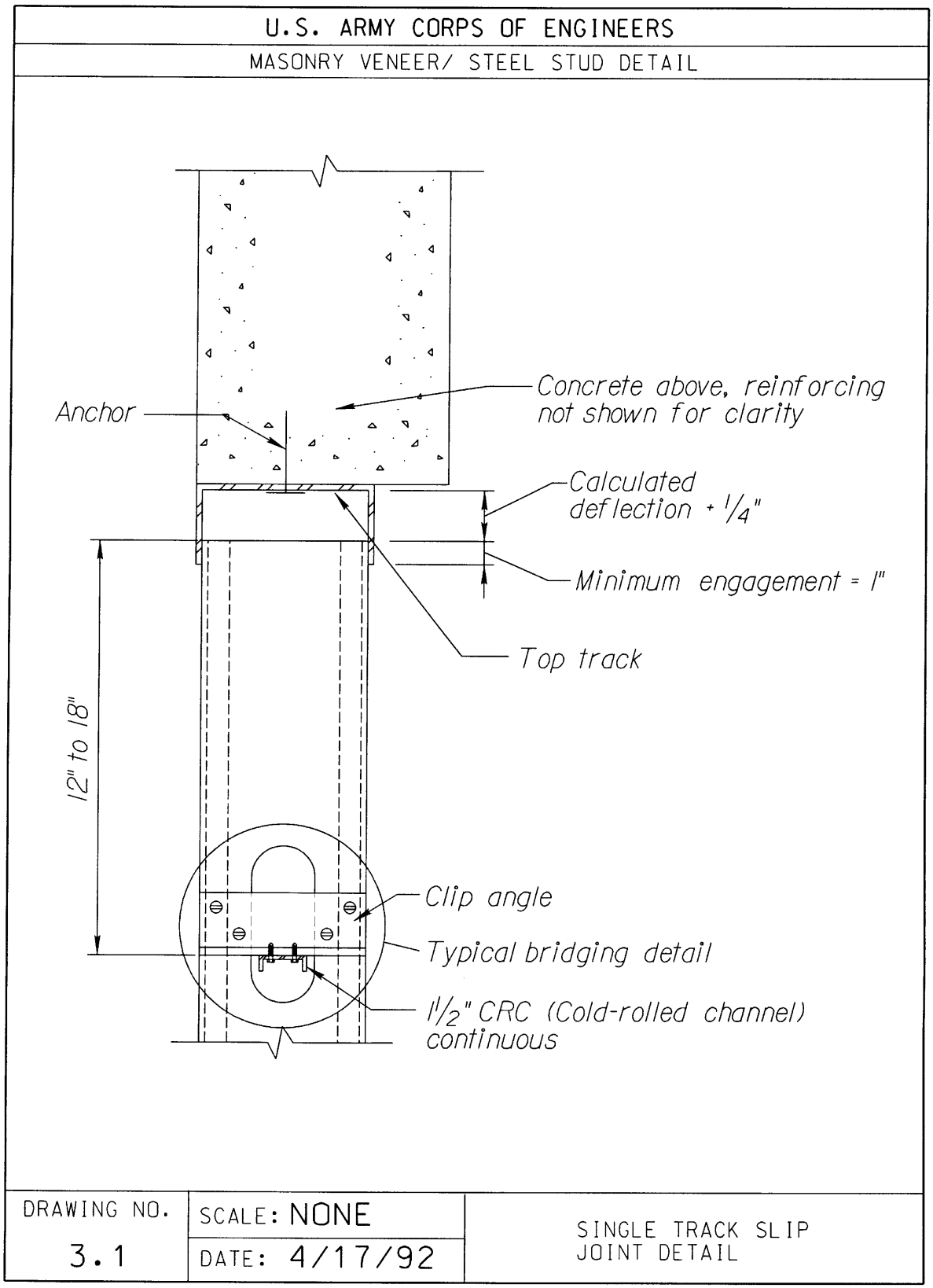


Figure G-12. Slip Joint Details, Typical Single Track

U.S. ARMY CORPS OF ENGINEERS

MASONRY VENEER/ STEEL STUD DETAIL

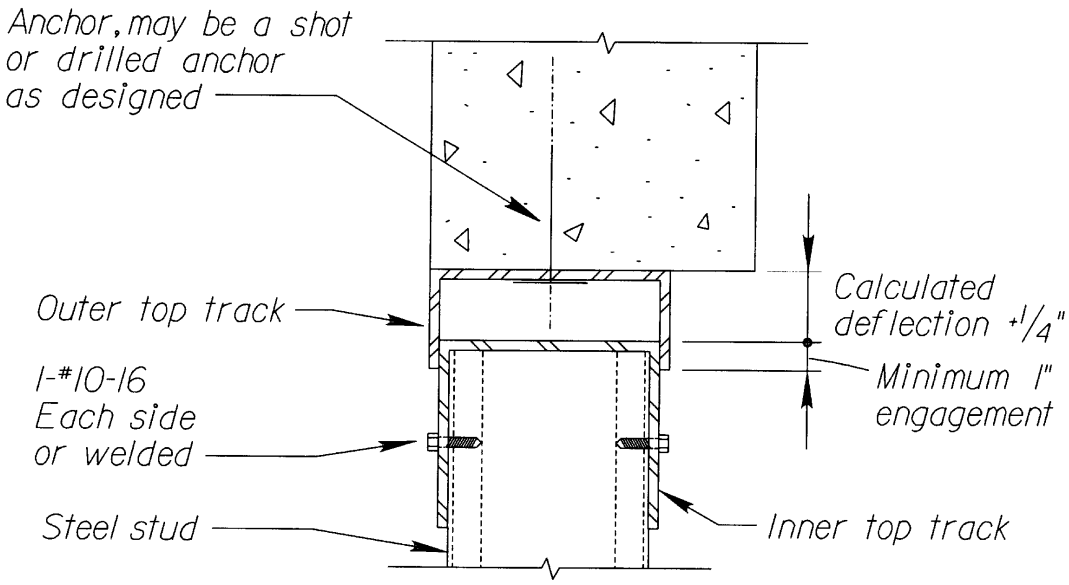


| DRAWING NO. | SCALE: NONE | DOUBLE TRACK SLIP JOINT DETAIL |
|---|---|---|
| 3.2 | DATE: 4/17/92 | |

Figure G-13. Slip Joint Details, Typical Double Track

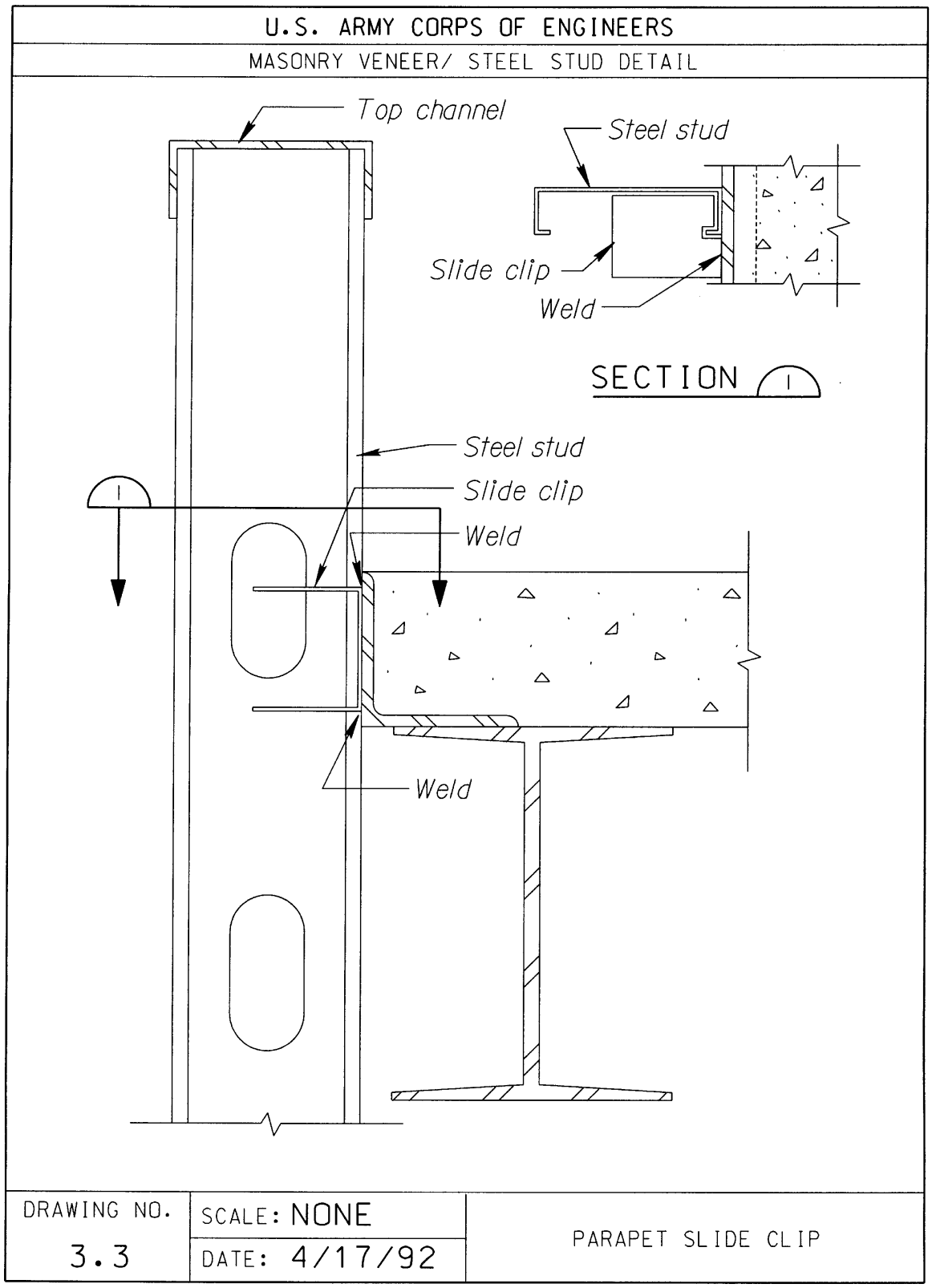


Figure G-14. Slip Joint Details, Parapet Slide Clip

U.S. ARMY CORPS OF ENGINEERS

MASONRY VENEER/ STEEL STUD DETAIL

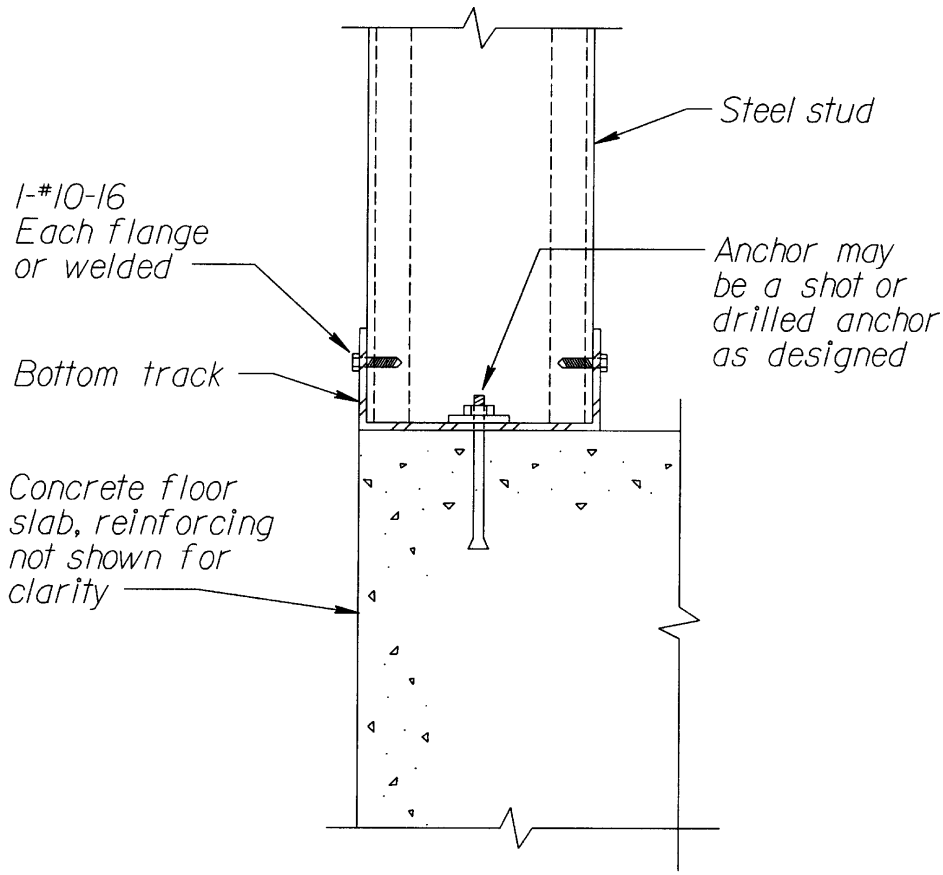


| DRAWING NO. | SCALE: NONE | COLD-FORMED BOTTOM CONNECTION, TRACK ANCHORED TO CONCRETE |
|---|---|---|
| 4.1 | DATE: 4/17/92 | |

Figure G-15. Bottom Connection, Track Anchored to Concrete

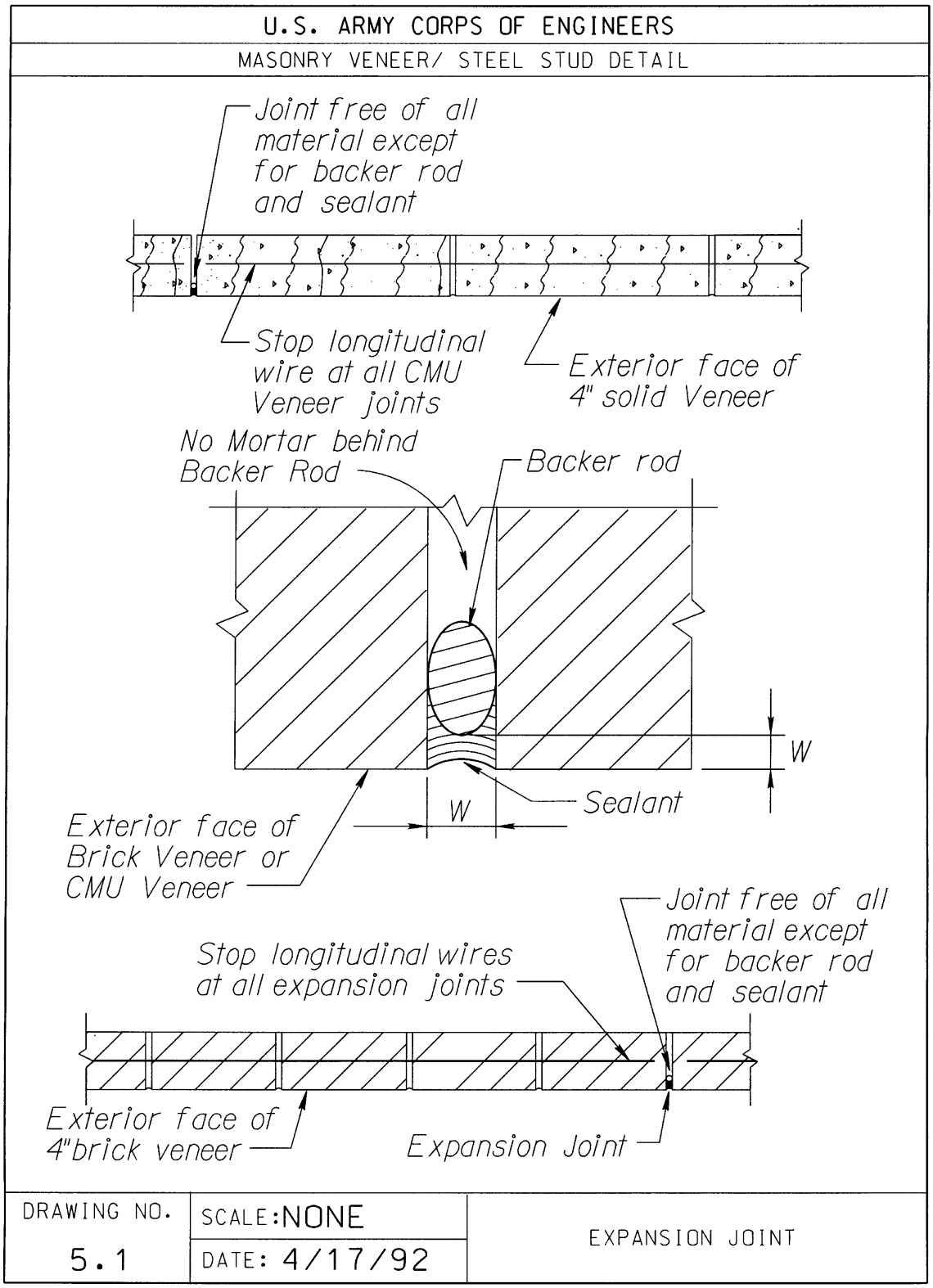


Figure G-16. Expansion Joints, Brick or CMU Veneer Joint