(c) Plywood sheathing.

1. Boundary members. All boundary members will be proportioned and spliced where necessary to transmit direct stresses. The nominal width of the framing members will be at least 2 inches (50mm). In general, panel edges will bear on the framing members and butt along their centerlines. Nails will be placed not less than 3/8 inch (10mm) in from the panel edge, not more than 12 inches (300mm) apart along intermediate supports, and 6 inches (150mm) along panel edge bearings, and will be firmly driven into the framing members. No unblocked panels less than 12 inches (300mm) wide will be used.

2. Nailing. The use of pneumatically or mechanically driven steel wire staples with a minimum crown width of 7/16 inch (11mm) is an acceptable alternative method of attaching diaphragms. The crown of the staple must be installed parallel to the framing member.

Common Wire Nail	Staple	Minimum Staple Penetration In Framing Member
6d	14 gauge	1 inch
8d	13 gauge	1 inch
10d	1 1/8 inch	12 gauge

1 inch = 25mm

3. Typical details. Refer to Figure 7-63.

(5) Acceptance criteria.

(a) The response modification factors, *R*, for wood diaphragms conforming to Performance Objectives 1A shall be based on the factor for the applicable structural system in Table 7-1. The nominal shear strength of wood diaphragms will be calculated by principles of mechanics using values of fastener strength and shear resistance in the sheathing material based on approved values from cyclical tests. The design strength shall be the nominal strength multiplied by a resistance factor, *N*, equal to 0.65. When approved allowable stress (including a one-third increase for wind or seismic loads), the design strength may be taken as 1.50 times the allowable values. Factored shear capacity values (i.e., including capacity reduction factor, *N*, equal to 0.65) for plywood diaphragm are provided in Table 7-25.

(b) Modification factors, *m*, for enhanced performance objectives are provided in Table 7-26.

(c) Modeling parameters and numerical acceptance criteria for nonlinear procedures are provided in Table 7-27.

(d) Expected strength, Q_{CE}, for deformation-controlled connections and other elements shall be taken as the nominal strength calculated in accordance with FEMA 302, without the *N* factor.

(e) Lower-bound strength for force-controlled connections and other elements shall be

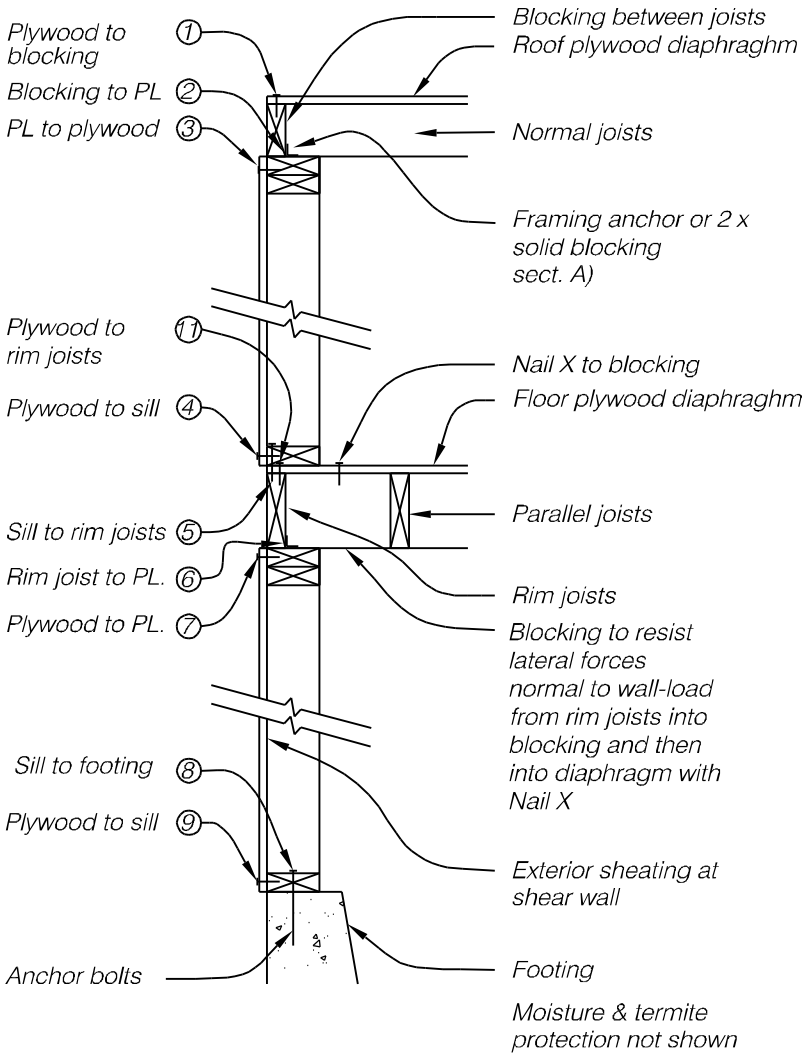

1 - 9 Path of forces from roof to foundation
11 , 6 - 9 Path for forces from floor diaphraghm
details above are schematic, the purpose is to show the path of forces in a particular arrangement of framing elements.

Sheet 1 of 4

Figure 7-63 Wood details.

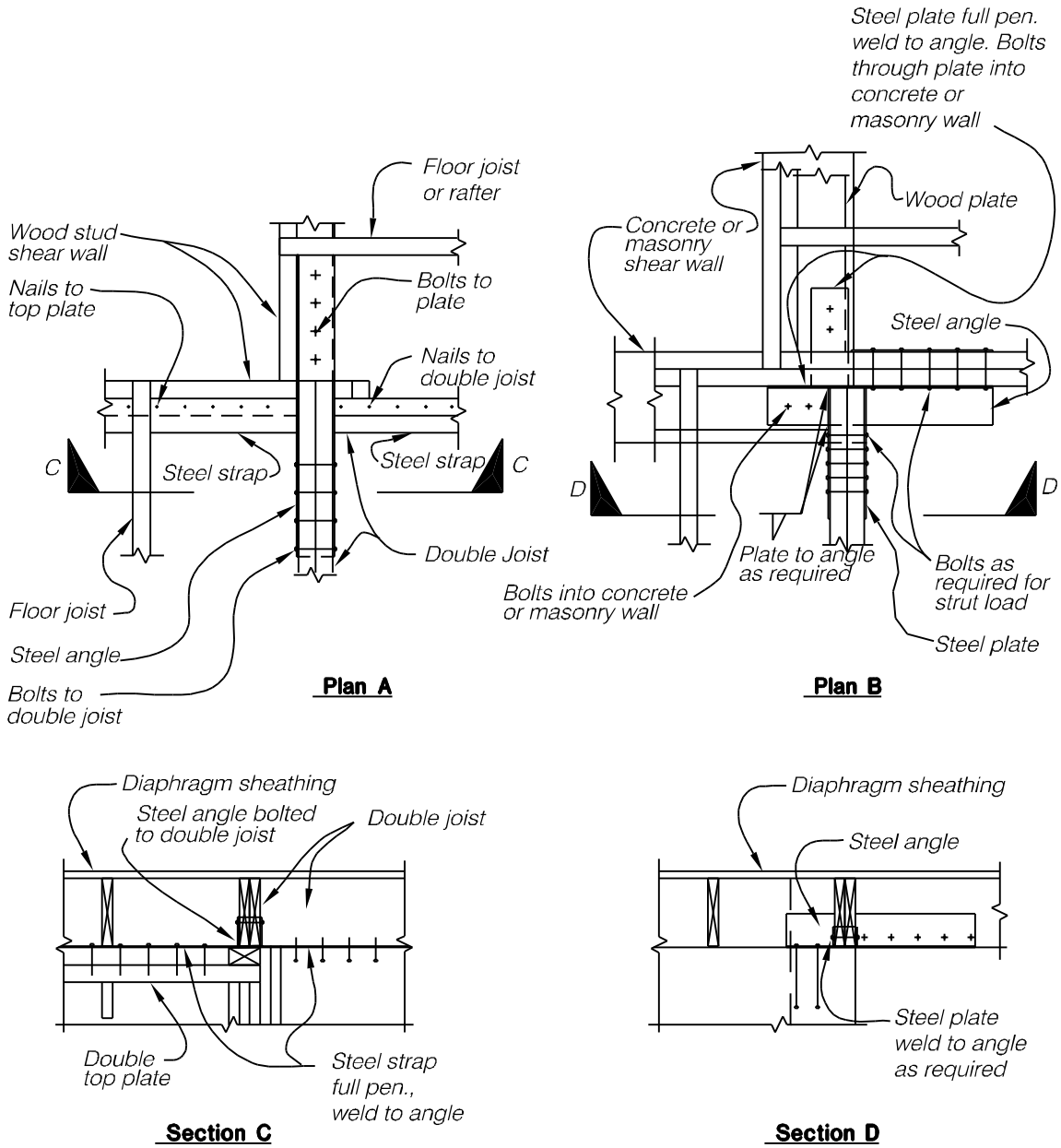

Note:
Bolts and nailing to be designed for diaphragm strut or chord loads. Roof connections will be similar but modified because of roof slope.

Sheet 2 of 4

Figure 7-63 Wood details continued.

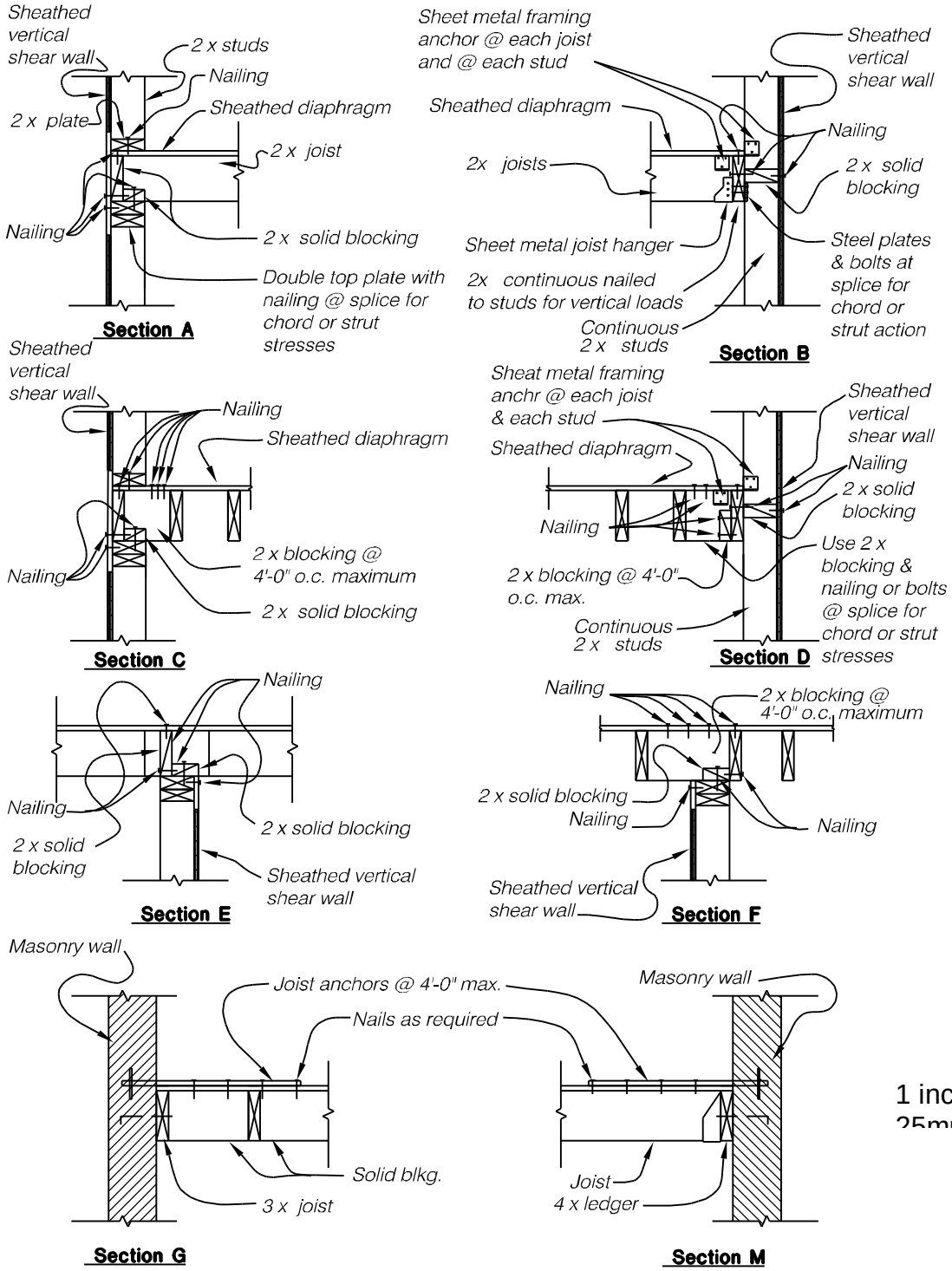

Figure 7-63 continued.

Sheet 3 of 4

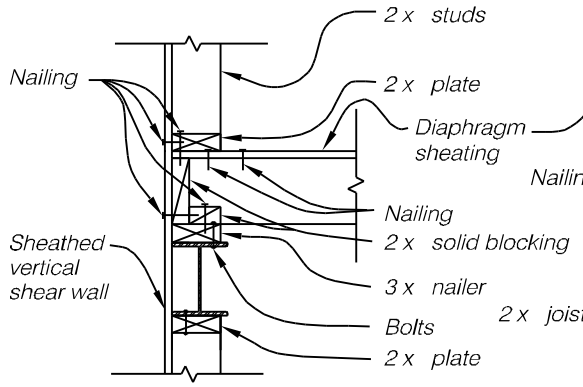

Section A

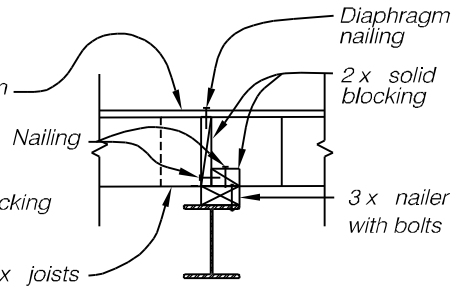

Section B

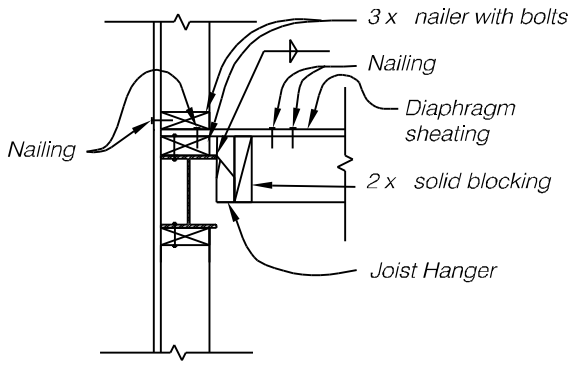

Section C

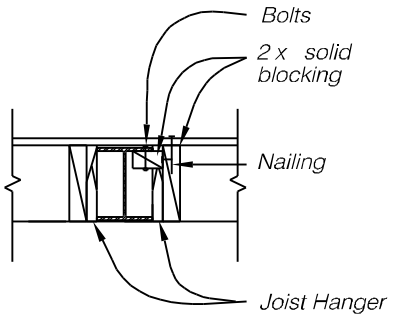

Section D

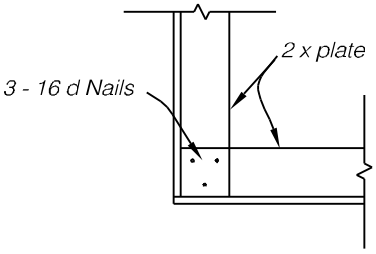

Plan E
Top Plate Lap at Corner

Note:
Nails and bolts shown on details will be designed to resist the prescribed seismic shears and wall anchorages. Roof connectoins will be similar but modified because of roof slope.

1 inch = 25mm

Sheet 4 of 4

Figure 7-63 Wood details continued.

TABLE 7-25

Factored Shear Resistance in Kips per Foot for Horizontal Wood Diaphragms With Framing Members of Douglas Fir-Larch or Southern Pine for Seismic Loading [a,b]

Panel Grade	Fastener [c]		Minimum nominal panel thickness (in.)	Minimal nominal width of framing (in.)	Lines of fasteners	Blocked Diaphragms							Unblocked Diaphragms [d]	
						Fastener spacing at diaphragm boundaries (all cases), at continuous panel edges parallel to load (Cases 3 and 4) and at all panel edges (Cases 5 and 6) [c]							Fastener spacing at 6-inch centers at supported edges	
						6		4		2½ [f]		2 [f]		
						Spacing per line at other panel edges (in.)								
	Type	Minimum penetration in framing (in.)				6	6	4	4	3	3	2	Case 1	Cases 2, 3, 4, 5, and 6
Structural 1	6d common	1¼	3/8	2	1	0.24	0.33	---	0.49	---	0.55	---	0.21	0.16
				3	1	0.27	0.36	---	0.55	---	0.62	---	0.24	0.18
	8d common	1½	3/8	2	1	0.35	0.47	---	0.69	---	0.78	---	0.31	0.23
				3	1	0.39	0.52	---	0.78	---	0.88	---	0.34	0.26
	10d [g] common	1-5/8	15/32	2	1	0.42	0.55	---	0.83	---	0.95	---	0.37	0.28
				3	1	0.47	0.62	---	0.94	---	1.07	---	0.42	0.31
	10d [g] common	1-5/8	23/32	3	2	---	0.85	1.13	1.22	1.60	---	---	---	---
				4	2	---	0.98	1.27	1.40	1.83	---	---	---	---
				4	3	---	1.22	1.70	1.79	2.35	---	---	---	---
	14 gauge staples	2	23/32	3	2	---	0.78	0.78	1.09	1.17	1.35	1.56	---	---
				4	3	---	1.09	1.17	1.48	1.76	1.87	2.34	---	---
Sheathing, Single Floor and Other Grades Covered in References 9.10 and 9.11	6d common	1¼	3/8	2	1	0.24	0.33	---	0.49	---	0.55	---	0.21	0.16
				3	1	0.27	0.36	---	0.55	---	0.62	---	0.24	0.18
	8d common	1½	3/8	2	1	0.31	0.42	---	0.62	---	0.71	---	0.28	0.21
				3	1	0.35	0.47	---	0.70	---	0.79	---	0.31	0.23
			7/16	2	1	0.33	0.44	---	0.66	---	0.75	---	0.30	0.22
				3	1	0.37	0.49	---	0.74	---	0.84	---	0.33	0.25
			15/32	2	1	0.35	0.47	---	0.69	---	0.78	---	0.31	0.23
				3	1	0.39	0.52	---	0.78	---	0.88	---	0.34	0.26
	10d [g] common	1-5/8	15/32	2	1	0.38	0.50	---	0.75	---	0.85	---	0.33	0.25
				3	1	0.42	0.56	---	0.85	---	0.96	---	0.38	0.28
			19/32	2	1	.042	0.55	---	0.83	---	0.95	---	0.37	0.28
				3	1	0.47	0.62	---	0.94	---	1.07	---	0.42	0.31
			23/32	3	2	---	0.84	1.13	1.22	1.59	---	---	---	---
				4	2	---	0.98	1.27	1.40	1.81	---	---	---	---
				4	3	---	1.22	1.70	1.78	1.96	---	---	---	---
	14 gauge staples	2	23/32	3	2	---	0.78	0.78	1.07	1.17	1.33	1.56	---	---
				4	3	---	1.07	1.17	1.46	1.76	1.82	1.96	---	---

TABLE 7-25 (cont.)

Factored Shear Resistance in Kips per Foot for Horizontal Wood DiaphragmsWith Framing Members of Douglas Fir-Larch or Southern Pine for Seismic Loading [a,b]

a $\lambda = 1.0$ $\phi = 0.65$

b l/w shall not be more than 4/1 for blocked diaphragms or more than 3/1 for unblocked diaphragms. For framing members of other species set forth in ASCE 16-95, with the range of specific gravity (SG) noted, allowable shear values shall be calculated for all panel grades by multiplying the values for Structural I by the following factors: 0.82 for SG equal to or greater than 0.42, but less than 0.49 (0.42 = SG < 0.49) and 0.65 for SG less than 0.42 (SG < 0.42).

c Space nails along intermediate framing members at 12-inch centers except where spans are greater than 32 inches, space nails at 6-inch centers.

d Blocked values are permitted to be used for 1-1/8-inch panels with tongue-and-groove edges where 1 in. by 3/8-inch crown by No. 16 gauge staples are driven through the tongue-and-groove edges 3/8 inch from the panel edge so as to penetrate the tongue. Staples shall be spaced at one-half the boundary nail spacing for Cases 1 and 2, and at one-third the boundary nail spacing for Cases 3 through 6.

e Maximum shear for Cases 3 through 6 is limited to 1,500 pounds per foot.

f For values listed for 2-inch nominal framing member width, the framing members at adjoining panel edges shall be 3 inches nominal width. Nails at panel edges shall be placed in two lines at these locations.

g Framing at adjoining panel edges shall be 3-inch nominal or wider and nails shall be staggered where 10d nails having penetration into framing of more than 1-5/8 inches are spaced 3 inches or less on center.

Metric equivalents:

1 inch = 25mm

1 pound/foot = 14.58 N/m

1 kp/foot = 14.58 kN/m

		m Factors for Linear Procedures[2]					
		Primary				Secondary	
		IO	SE	LS	CP	LS	CP
Shear Walls	**Height/Length Ratio (*h/L*)[1]**						
Horizontal 1" x 6" Sheathing	*h/L* < 1.0	1.8	3.0	4.2	5.0	5.0	5.5
Horizontal 1" x 10" Sheathing	*h/L* < 1.0	1.6	2.5	3.4	4.0	4.0	5.0
Horizontal Wood Siding Over Horizontal 1" x 6" Sheathing	*h/L* < 1.5	1.4	2.0	2.6	3.0	3.1	4.0
Horizontal Wood Siding Over Horizontal 1" x 10" Sheathing	*h/L* < 1.5	1.3	1.8	2.3	2.6	2.8	3.0
Diagonal 1" x 6" Sheathing	*h/L* < 1.5	1.5	2.2	2.9	3.3	3.4	3.8
Diagonal 1" x 8" Sheathing	*h/L* < 1.5	1.4	2.1	2.7	3.1	3.1	3.6
Horizontal Wood Siding Over Diagonal 1" x 6" Sheathing	*h/L* < 2.0	1.3	1.8	2.2	2.5	2.5	3.0
Horizontal Wood Siding Over Diagonal 1" x 8" Sheathing	*h/L* < 2.0	1.3	1.7	2.0	2.3	2.5	2.8
Double Diagonal 1" x 6" Sheathing	*h/L* < 2.0	1.2	1.5	1.8	2.0	2.3	2.5
Double Diagonal 1" x 8" Sheathing	*h/L* < 2.0	1.2	1.5	1.7	1.9	2.0	2.5
Vertical 1" x 10" Sheathing	*h/L* < 1.0	1.5	2.3	3.1	3.6	3.6	4.1
Structural Panel or Plywood Panel Sheathing or Siding	*h/L* < 1.0*	1.7	2.3	3.8	4.5	4.5	5.5
	h/L > 2.0* *h/L* < 3.5	1.4	2.0	2.6	3.0	3.0	4.0
Stucco on Studs	*h/L*<1.0 *	1.5	2.3	3.1	3.6	3.6	4.0
	h/L = 2.0 *	1.3	1.8	2.2	2.5	2.5	3.0
Stucco over 1" x Horizontal Sheathing	*h/L* < 2.0	1.5	2.2	3.0	3.5	3.5	4.0
Gypsum Plaster on Wood Lath	*h/L* < 2.0	1.7	2.8	3.9	4.6	4.6	5.1
Gypsum Plaster on Gypsum Lath	*h/L* < 2.0	1.8	3.0	4.2	5.0	4.2	5.5
Gypsum Plaster on Metal Lath	*h/L* < 2.0	1.7	2.7	3.7	4.4	3.7	5.0
Gypsum Sheathing	*h/L* < 2.0	1.9	3.3	4.7	5.7	4.7	6.0
Gypsum Wallboard	*h/L* < 1.0 *	1.9	3.3	4.7	5.7	4.7	6.0
	h/L = 2.0 *	1.6	2.5	3.4	4.0	3.8	4.5
Horizontal 1" x 6" Sheathing With Cut-In Braces or Diagonal Blocking	*h/L* < 1.0	1.7	2.7	3.7	4.4	4.2	4.8
Fiberboard or Particleboard Sheathing	*h/L* < 1.5	1.6	2.4	3.2	3.8	3.8	5.0

1. For ratios greater than the maximum listed values, the component is considered not effective in resisting lateral loads.

2 Linear interpolation is permitted for intermediate value if h/L has asterisks.

Table 7-26: Numerical Acceptance Factors for Linear Procedures—Wood Components

		m Factors for Linear Procedures[2]					
		Primary				Secondary	
		IO	SE	LS	CP	LS	CP
Diaphragms	**Length/Width Ratio (*L/b*)[1]**						
Single Straight Sheathing, Chorded	*L/b* < 2.0	1	1.5	2.0	2.5	2.4	3.1
Single Straight Sheathing, Unchorded	*L/b* < 2.0	1	1.3	1.5	2.0	1.8	2.5
Double Straight Sheathing, Chorded	*L/b* < 2.5	1.25	1.6	2.0	2.5	2.3	2.8
Double Straight Sheathing, Unchorded	*L/b* < 2.5	1	1.3	1.5	2.0	1.8	2.3
Single Diagonal Sheathing, Chorded	*L/b* < 2.5	1.25	1.6	2.0	2.5	2.3	2.9
Single Diagonal Sheathing, Unchorded	*L/b* < 2.0	1	1.3	1.5	2.0	1.8	2.5
Straight Sheathing Over Diagonal Sheathing, Chorded	*L/b* < 3.0	1.5	2.0	2.5	3.0	2.8	3.5
Straight Sheathing Over Diagonal Sheathing, Unchorded	*L/b* < 2.5	1.25	1.6	2.0	2.5	2.3	3.0
Double Diagonal Sheathing, Chorded	*L/b* < 3.5	1.5	2.0	2.5	3.0	2.9	3.5
Double Diagonal Sheathing, Unchorded	*L/b* < 3.5	125	1.6	2.0	2.5	2.4	3.1
Wood Structural Panel, Blocked, Chorded	*L/b* < 3.0 * *L/b* = 4*	1.5 1.5	2.3 2.0	3.0 2.5	4.0 3.0	3.5 2.8	4.5 3.5
Wood Structural Panel, Unblocked, Chorded	*L/b* < 3* *L/b* = 4*	1.5 1.5	2.0 1.8	2.5 2.0	3.0 2.5	2.9 2.6	4.0 3.2
Wood Structural Panel, Blocked, Unchorded	*L/b* < 2.5 *L/b* = 3.5	1.25 1.25	1.9 1.6	2.5 2.0	3.0 2.5	2.9 2.6	4.0 3.2
Wood Structural Panel, Unblocked, Unchorded	*L/b* < 2.5 *L/b* = 3.5	1.25 1.0	1.6 1.3	2.0 1.5	2.5 2.0	2.4 2.0	3.0 2.6
Wood Structural Panel Overlay on Sheathing, Chorded	*L/b* < 3* *L/b* = 4*	1.5 1.5	2.0 1.8	2.5 2.0	3.0 2.5	2.9 2.6	4.0 3.2
Wood Structural Panel Overlay on Sheathing, Unchorded	*L/b* < 2.5 *L/b* = 3.5	1.25 1.0	1.6 1.3	2.0 1.5	2.5 2.0	2.4 1.9	3.0 2.6
Component/Element							
Frame elements subject to axial and bending stresses		1.0	1.8	2.5	3.0	2.5	4.0
Connections							
Nails - 8d and larger - Wood to Wood		2.0	4.0	6.0	8.0	8.0	9.0
Nails - 8d and larger - Metal to Wood		2.0	3.0	4.0	6.0	5.0	7.0
Screws - Wood to Wood		1.2	1.6	2.0	2.2	2.0	2.5
Screws - Metal to Wood		1.1	1.5	1.8	2.0	1.8	2.3
Lag Bolts - Wood to Wood		1.4	2.0	2.5	3.0	2.5	3.3
Lag Bolts - Metal to Wood		1.3	1.8	2.3	2.5	2.4	3.0
Machine Bolts - Wood to Wood		1.3	2.2	3.0	3.5	3.3	3.9
Machine Bolts - Metal to Wood		1.4	2.1	2.8	3.3	3.1	3.7
Split Rings and Shear Plates		1.3	1.8	2.2	2.5	2.3	2.7
Bolts - Wood to Concrete or Masonry		1.4	2.1	2.7	3.0	2.8	3.5

1. For ratios greater than the maximum listed values, the component is considered not effective in resisting lateral loads.

2 Linear interpolation is permitted for intermediate value if h/L has asterisks.

Table 7-26: Numerical Acceptance Factors for Linear Procedures—Wood Components (Continued)

		d	e	c
Shear Wall Type - Types of Existing Wood and Light Frame Shear Walls	**Height/Length Ratio *h/L*[1]**			
Horizontal 1" x 6" Sheathing	*h/L* < 1.0	5.0	6.0	0.3
Horizontal 1" x 10" Sheathing	*h/L* < 1.0	4.0	5.0	0.3
Horizontal Wood Siding Over Horizontal 1" x 6" Sheathing	*h/L* < 1.5	3.0	4.0	0.2
Horizontal Wood Siding Over Horizontal 1" x 10" Sheathing	*h/L* < 1.5	2.6	3.6	0.2
Diagonal 1" x 6" Sheathing	*h/L* < 1.5	3.3	4.0	0.2
Diagonal 1" x 8" Sheathing	*h/L* < 1.5	3.1	4.0	0.2
Horizontal Wood Siding Over Diagonal 1" x 6" Sheathing	*h/L* < 2.0	2.5	3.0	0.2
Horizontal Wood Siding Over Diagonal 1" x 8" Sheathing	*h/L* < 2.0	2.3	3.0	0.2
Double Diagonal 1" x 6" Sheathing	*h/L* < 2.0	2.0	2.5	0.2
Double Diagonal 1" x 8" Sheathing	*h/L* < 2.0	2.0	2.5	0.2
Vertical 1" x 10" Sheathing	*h/L* < 1.0	3.6	4.0	0.3
Structural Panel or Plywood Panel Sheathing or Siding	*h/L* < 1.0*	4.5	5.5	0.3
	h/L > 2.0* *h/L* < 3.5	3.0	4.0	0.2
Stucco on Studs	*h/L* < 1.0*	3.6	4.0	0.2
	h/L = 2.0*	2.5	3.0	0.2
Stucco over 1" x Horizontal Sheathing	*h/L* < 2.0	3.5	4.0	0.2
Gypsum Plaster on Wood Lath	*h/L* < 2.0	4.6	5.0	0.2
Gypsum Plaster on Gypsum Lath	*h/L* < 2.0	5.0	6.0	0.2
Gypsum Plaster on Metal Lath	*h/L* < 2.0	4.4	5.0	0.2
Gypsum Sheathing	*h/L* < 2.0	5.7	6.3	0.2
Gypsum Wallboard	*h/L* < 1.0*	5.7	6.3	0.2
	h/L = 2.0*	4.0	5.0	0.2
Horizontal 1" x 6" Sheathing With Cut-In Braces or Diagonal Blocking	*h/L* < 1.0	4.4	5.0	0.2
Fiberboard or Particleboard Sheathing	*h/L* < 1.5	3.8	4.0	0.2
Diaphragm Type - Horizontal Wood Diaphragms	**Length/Width Ratio (*L/b*)[1]**			
Single Straight Sheathing, Chorded	*L/b* < 2.0	2.5	3.5	0.2
Single Straight Sheathing, Unchorded	*L/b* < 2.0	2.0	3.0	0.3
Double Straight Sheathing, Chorded	*L/b* < 2.0	2.5	3.5	0.2
Double Straight Sheathing, Unchorded	*L/b* < 2.0	2.0	3.0	0.3

1. For ratios greater than the maximum listed values, the component is considered not effective in resisting lateral loads.

Notes: (a) Acceptance criteria for primary components

(Δ/Δ_y) IO = 1.0 + 0.2 (d - 1.0)
(Δ/Δ_y) SE = 1.0 + 0.5 (d - 1.0)
(Δ/Δ_y) LS = 1.0 + 0.8 (d - 1.0)
(Δ/Δ_y) CP = d

(b) Acceptance criteria for secondary components

(Δ/Δ_y) LS = d
(Δ/Δ_y) CP = e

(c) Linear interpolation is permitted for intermediate values if h/L or L/b has asterisks.

Table 7-27: Normalized Force-Deflection Curve Coordinates for Nonlinear Procedures—Wood Components

		d	e	c
Single Diagonal Sheathing, Chorded	*L/b* < 2.0	2.5	3.5	0.2
Single Diagonal Sheathing, Unchorded	*L/b* < 2.0	2.0	3.0	0.3
Straight Sheathing Over Diagonal Sheathing, Chorded	*L/b* < 2.0	3.0	4.0	0.2
Straight Sheathing Over Diagonal Sheathing, Unchorded	*L/b* < 2.0	2.5	3.5	0.3
Double Diagonal Sheathing, Chorded	*L/b* < 2.0	3.0	4.0	0.2
Double Diagonal Sheathing, Unchorded	*L/b* < 2.0	2.5	3.5	0.2
Wood Structural Panel, Blocked, Chorded	*L/b* < 3* *L/b* = 4*	4.0 3.0	5.0 4.0	0.3
Wood Structural Panel, Unblocked, Chorded	*L/b* < 3* *L/b* = 4*	3.0 2.5	4.0 3.5	0.3
Wood Structural Panel, Blocked, Unchorded	*L/b* < 2.5* *L/b* = 3.5*	3.0 2.5	4.0 3.5	0.3
Wood Structural Panel, Unblocked, Unchorded	*L/b* < 2.5* *L/b* = 3.5*	2.5 2.0	3.5 3.0	0.4
Wood Structural Panel Overlay On Sheathing, Chorded	*L/b* < 3* *L/b* = 4*	3.0 2.5	4.0 3.5	0.3
Wood Structural Panel Overlay On Sheathing, Unchorded	*L/b* < 2.5* *L/b* = 3.5*	2.5 2.0	3.5 3.0	0.4
Connection Type				
Nails - Wood to Wood		7.0	8.0	0.2
Nails - Metal to Wood		5.5	7.0	0.2
Screws - Wood to Wood		2.5	3.0	0.2
Screws - Wood to Metal		2.3	2.8	0.2
Lag Bolts - Wood to Wood		2.8	3.2	0.2
Lag Bolts - Metal to Wood		2.5	3.0	0.2
Bolts - Wood to Wood		3.0	3.5	0.2
Bolts - Metal to Wood		2.8	3.3	0.2

1. For ratios greater than the maximum listed values, the component is considered not effective in resisting lateral loads.

Notes: (a) Acceptance criteria for primary components

(Δ/Δ_y) IO = 1.0 + 0.2 (d - 1.0)
(Δ/Δ_y) SE = 1.0 + 0.5 (d - 1.0)
(Δ/Δ_y) LS = 1.0 + 0.8 (d - 1.0)
(Δ/Δ_y) CP = d

(b) Acceptance criteria for secondary components

(Δ/Δ_y) LS = d
(Δ/Δ_y) CP = e

(c) Linear interpolation is permitted for intermediate values if h/L or L/b has asterisks.

Table 7-27: Normalized Force-Deflection Curve Coordinates for Nonlinear Procedures—Wood Components (Continued)

determined in accordance with FEMA 302, includingthe *N* factor.

g. Horizontal Bracing.

(1) General. Diaphragms may be made of horizontal steel bracing. Usually, the bracing consists of members added to the top or bottom plane of a system of floor or roof trusses or beams. Transverse elements are added for components perpendicular to the trusses or beams, and diagonal members are added to form a triangulated plane of bracing.

(2) Acceptance criteria.

(a) Response modification factors, *R*, for horizontal bracing in buildings conforming to Performance Objective 1A will be based on the factors for the applicable structural systems in Table 7-1. Bracing members and connections will be designed as prescribed for vertical steel concentric braced frames in Paragraph 7-3b.

(b) Modification factors, *m*, for enhanced performance objectives and modeling parameters and numerical acceptance criteria shall be as prescribed for concentric steel braced frames in Paragraph 7-3b(9).

(c) Expected strength for deformation-controlled components and lower-bound strength for force-controlled components shall also be as prescribed for concentric braced frames in Paragraph 7-3b(9).