EI 11C201
1 March 1997

US Army Corps
of Engineers®

Engineering Instructions

WASTEWATER COLLECTION AND PUMPING

Headquarters
U.S. Army Corps of Engineers
Engineering Division
Directorate of Military Programs
Washington, DC 20314-1000

ENGINEERING INSTRUCTIONS

WASTEWATER COLLECTION AND PUMPING

Record of Changes (changes indicated \1\ ... /1/)

No.	Date	Pages

HEADQUARTERS, U.S. ARMY CORPS OF ENGINEERS
DIRECTORATE OF MILITARY PROGRAMS
ENGINEERING DIVISION
WASHINGTON, D.C.

FOREWORD

These engineering instructions (EI) provide design criteria and guidance for Corps of Engineers major subordinate commands (MSC), districts, and field operating activities (FOA). These engineering instructions are to be used as a guide when planning, programming, and designing military facilities at Army installations.

EI are living documents and will be periodically reviewed, updated, and made available to MSC, districts, and FOA as part of the HQUSACE responsibility for technical criteria and policy for new military construction. CEMP-EA is responsible for administration of the EI system; technical content of EI is the responsibility of the HQUSACE element of the discipline involved. Recommended changes to EI, with rationale for the changes, should be sent to HQUSACE, ATTN: CEMP-EA, 20 Massachusetts Ave., NW, Washington, DC 20314-1000.

EI are effective upon issuance. EI are distributed only in electronic media, primarily through TECHINFO (both the electronic bulletin board at 205-895-1799 and Internet at http://www.usace.army.mil or http://www.hnd.usace.army.mil and the Construction Criteria Base (CCB) compact disk. Hard copies produced by the user from the electronic media should be checked against the current electronic version prior to use to assure that the latest instructions are used.

FOR THE DIRECTOR OF MILITARY PROGRAMS:

KISUK CHEUNG, P.E.
Chief, Engineering Division
Directorate of Military Programs

DEPARTMENT OF THE ARMY
U.S. Army Corps of Engineers
Washington, DC 20314-1000

CEMP-E

Engineering Instructions
No. 11C201

1 March 1997

WASTEWATER COLLECTION AND PUMPING

Table of Contents

Page

CHAPTER 1. GENERAL

Paragraph 1-1. PURPOSE AND SCOPE 1-1

1-2. APPLICABILITY 1-1

1- 3. REFERENCES 1-1

1-4. DESIGN OBJECTIVES 1-1

1-5. SPECIAL WASTES 1-1

1-6. LIMITATIONS 1-2

1-7. ALTERNATIVES TO GRAVITY SYSTEMS 1-2

CHAPTER 2. PRELIMINARY DESIGN CONSIDERATIONS

Paragraph 2-1. EXISTING CONDITIONS 2-1

2-2. FIELD INVESTIGATIONS 2-1

2-3. LAYOUT 2-1

2-4. PUMPING STATION SITE SELECTION 2-3

2-5. PUMPING STATION BUILDING AND SITE REQUIREMENTS 2-3

2-6. PROTECTION OF WATER SUPPLIES 2-4

CHAPTER 3. HYDRAULIC DESIGN OF SEWERS

Paragraph 3-1. QUANTITY OF WASTEWATER 3-1

3- 2. GRAVITY SEWER DESIGN 3-4

3- 3. REQUIRED PUMPING CAPACITY 3-7

3-4. DEPRESSED SEWERS 3-8

3-5. HYDROGEN SULFIDE IN SEWERS 3-7

Page

CHAPTER 4. SEWER SYSTEM LAYOUT AND APPURTENANCES

Paragraph 4-1. MANHOLES 4-1

4-2. BUILDING CONNECTIONS 4-2

4-3. CLEANOUTS 4-2

CHAPTER 5. STRUCTURAL DESIGN OF SEWERS

Paragraph 5-1. GENERAL 5-1

5-2. LOADS ON SEWERS 5-1

5-3. SUPPORTING STRENGTH OF SEWERS 5-3

5-4. SPECIAL DESIGNS 5-5

CHAPTER 6. PUMPING STATION AND EQUIPMENT

Paragraph 6-1 .TYPE OF CONSTRUCTION 6-1

6-2. PUMPS 6-1

6-3. PUMP DRIVES 6-3

6-4. DRIVE MECHANISMS 6-5

6-5. PUMP CONTROLS AND INSTRUMENTATION 6-5

CHAPTER 7. PUMPING SYSTEM DESIGN

Paragraph 7-1. FORCE MAIN HYDRAULICS 7-1

7-2. PUMP ANALYSIS AND SELECTION 7-2

7-3. PUMP CONTROLS 7-5

7-4. PUMP SCHEDULING AND OPERATIONS 7-5

7-5. WET WELL DESIGN 7-5

7-6. CAVITATION 7-7

7-7. SURGE ANALYSIS AND CONTROL 7-9

7-8. SCREENING AND COMMINUTING DEVICES 7-11

CHAPTER 8. PIPING

Paragraph 8-1. PIPE MATERIAL, FITTINGS, AND JOINTS. 8-1

Page

8-2. VALVES AND APPURTENANCES 8-6

8-3. INSTALLATION 8-7

CHAPTER 9. PUMPING STATION COMPONENTS

Paragraph 9-1. GENERAL 9-1

9-2. CONSTRUCTION REQUIREMENTS AND MATERIALS 9-1

9-3. STRUCTURAL SYSTEMS 9-2

9-4. MECHANICAL EQUIPMENT 9-3

9-5. HEATING AND VENTILATION 9-3

9-6. ELECTRICAL EQUIPMENT AND LIGHTING 9-3

9-7. STANDBY POWERS 9-8

9-8. WATER SUPPLY 9-8

9-9. FLOW MEASUREMENT 9-8

9-10. PAINTING AND PROTECTIVE COATS 9-8

CHAPTER 10. EVALUATION OF EXISTING SEWER SYSTEMS

Paragraph 10-1. PROBLEM 10-1

10-2. SOURCES OF SEWER SYSTEM DETERIORATION 10-1

10-3. INFILTRATION/INFLOW ANALYSIS 10-1

10-4. SMOKE TESTING 10-2

10-5. PHYSICAL INSPECTIONS 10-2

10-6. REMOTE INSPECTIONS 10-2

CHAPTER 11. REHABILITATION OF EXISTING SYSTEMS

Paragraph 11-1. REHABILITATION VERSUS REPLACEMENT 11-1

11-2. GROUTING 11-1

11-3.CEMENT LINING 11-1

11-4. SLIPLINING 11-1

11-5. CURED IN PLACE PIPING (CIPP) 11-2

Page

11-6. DEFORMED/FOLDED LINERS 11-2

11-7. PIPE BURSTING. 11-2

11-8. PIPE CRUSHING 11-2

11-9. OTHER METHODS 11-3

APPENDIX A REFERENCES A-1

APPENDIX B EXAMPLE PROBLEMS B-1

LIST OF FIGURES

Figure Title

3-1 Chart for Manning Formula 3-5
5-1 Load Factors and Class of Bedding 5-4
5-2 Bedding 5-5
7-1 Pump Suction Connections to Wet Well 7-8
9-1 Pumping Station Typical Layout 9-4
9-2 Pumping Station Sections 9-6

LIST OF TABLES

Table Title

3-1 Domestic Wastewater Allowances 3-2
5-1 Surface Load Coefficient 5-2
5-2 Impact factor (F) vs. Height of Cover 5-3
6-1 Classification of Pumping Stations 6-1
7-1 Minimum Pump Cycle Times 7-6
7-2 Required Submergence Depth to Prevent Vortexing 7-7
7-3 Water Hammer Wave Velocities 7-10

CHAPTER 1

INTRODUCTION

1-1. PURPOSE AND SCOPE. This document provides information, guidance, instructions, and criteria for the design of sanitary and industrial wastewater gravity collection systems and pumping facilities.

a. Sewers. This document prescribes the approach, requirements, criteria, considerations, and hydraulic calculations used in the design of gravity sewers. Acceptable materials and appurtenances are also presented. Alternatives to gravity systems are described, but design criteria is not given.

b. Pumping Stations. Facilities covered in these instructions include pump and ejector stations required for (1) removal of sanitary and industrial wastes from remote or low lying areas of sewers, (2) controlled introduction and lifting of raw wastewater into the waste treatment plant, (3) transfer of recycled and bypassed flows throughout the plant, and (4) discharge of treated scum; these facilities are presented in TM 5-814-3/AFM 88-11, Vol. 3. The design of a wastewater pumping station will typically include site improvements, structures, screening, and flow monitoring devices, pumping units, pump drives, system controls and instrumentation, mechanical and electrical components, interior piping, underground force mains, valves, and appurtenances. Small grinder pumps such as those used in low pressure systems are not included in this manual.

1-2. APPLICABILITY. These instructions are applicable to all USACE elements who plan and design wastewater facilities at fixed Army and Air Force installations.

1-3. REFERENCES. Appendix A contains a list of references used in these instructions.

1-4. DESIGN OBJECTIVES. The design of a sewer system must provide an engineered system of sewers and pump stations, complete with all appurtenant facilities, sufficient in size and capacity to collect and convey the required wastewater flows to an acceptable point of discharge. The system must be practicable, economically feasible, and all components must be located to minimize the costs of installation, operation, and maintenance. Sewers and appurtenances must be structurally sound, and must protect the environment from pollution caused by leakage or overflows. Extraneous flows that hydraulically overload the system and produce flooding at sewer manholes and lift stations must be excluded. Elimination of excessive infiltration and inflow is essential in avoiding increased costs of sewer maintenance, wastewater pumping, and treatment. Eliminating or minimizing conditions that lead to microbiological induced corrosion and other deterioration of the systems will reduce maintenance and repair costs. Even more important in this regard is the necessity to maintain design wastewater treatment efficiencies, and thus assure that effluent discharge requirements are met.

1-5. SPECIAL WASTES. Contributing waste flows which are harmful to sewer pipe materials, pumps, and appurtenant structures, toxic to biological and other waste treatment systems, or create fire and explosion hazards or a safety hazard to personnel, must be identified and evaluated early during predesign, so that suitable materials and/or procedures for their disposal can be included. Systems for hazardous and explosive wastes, corrosive acids or alkalies, high temperature or other industrial type wastes, will generally require the selection of highly resistant

pumps, valves and piping materials. Design of these systems will be in accordance with special criteria developed for the particular situation. Selection of materials for pumps, piping, valves and controls, etc., will be based on manufacturers' recommendations, product specifications, and any other appropriate design manuals or applicable criteria.

1-6. LIMITATIONS. To protect sewers, pumping stations and treatment facilities from unwanted pollutants and extraneous flows that result in excessive operation and maintenance, fire and explosion hazards, or reduced wastewater treatment efficiencies, limitations must be placed on the use of the sewer system. Wastewaters from fuel loading and dispensing systems, grease and oil from vehicle wash racks, aircraft washing and garage or shop floor drains, must be directed through oil/water separators to prevent such wastes from entering the sewers. Combined sewers will not be permitted, and collection of storm drainage of any kind must be avoided. The general guidelines cited in Water Environment Federation (WEF) Manual of Practice FD 3 for identifying wastes not admissible to sewers will be followed closely. Chapters 3 and 8 of TM 5-814-8 provide a description of the various types of industrial wastes generated at military installations, and give criteria governing discharge to sanitary or industrial waste sewers.

1-7. ALTERNATIVES TO GRAVITY SYSTEMS. There may be areas in which the topography is not well suited for construction of a gravity sewer system. In such areas, the installation of a gravity system would require deep and expensive trench excavation, jacking, boring, tunneling, or construction of long sewer lines to avoid unfavorable terrain. In cases like these, the existing topography and subsurface conditions at the site will be studied to determine if an alternative system would be more feasible. Depths of gravity sewers greater than 15 to 20 feet are usually uneconomical.

a. Wastewater pumping. The operation and maintenance costs of a pumping station with a forcemain, when capitalized, may offset or exceed the construction costs of a deep gravity sewer system. When it is not readily apparent which solution would be more economical, the decision to use one or the other will be based on a life cycle cost analysis. Initial capital and construction costs for pumps, ejectors, structures, force mains, etc., plus operation and maintenance costs, will be compared with the costs of deep trench excavation, or other special construction methods required for a gravity system. Generally, a gravity sewer system will be justified until its cost exceeds the cost of a pumped system by 10 percent. TM 5-814-8 contains criteria for economic evaluation of wastewater pumping.

b. Low Pressure Systems. Some areas under consideration may be further limited by high groundwater, unstable soil, shallow rock, or extremely adverse topography, and neither gravity sewers nor pump or ejector stations will be suitable. To overcome these difficulties, low pressure systems using grinder pumps with small diameter (less than 100 mm (4-inch)) pressure sewers may be utilized. Low pressure systems are also used with flat topography where low flows are anticipated. In a typical installation, wastewater from individual buildings will be discharged to a holding tank, and then periodically transferred by a grinder pump station through small diameter pipe, into either a central pressure main, conventional gravity sewer, pumping station, or wastewater treatment facility. Grinder pump stations, which are most common in housing units are package units, consist of single or duplex pumps in small underground fiberglass reinforced polyester or concrete tanks with controls mounted above the tank or on the side of the building served. The pumps cut and shred the waste before pumping it and create only enough head to empty the tank - not the forcemain. Normally a system must consist of several grinder pump stations before sufficient pressure is generated to pump waste to its

ultimate destination. Such package units shall be used only for domestic waste or where no solids such as bones, wood, or sand can enter the system. To minimize the need to maintain a large inventory of parts, only one or two different types of pumps should be installed in a system. In any event increased maintenance programs should be anticipated.

CHAPTER 2

PRELIMINARY DESIGN CONSIDERATIONS

2-1. EXISTING CONDITIONS. As an important initial step in the design process, existing maps, drawings, surveys, boring logs, and other data containing pertinent information on existing conditions in the area being served must be obtained. Possible sources of such information include the following:

- Installation or Facility Engineer.
- Army or Air Force using service.
- Federal Agencies such as United States Geological Survey and Soil Conservation Service.
- State, county or municipal engineering departments.
- Public utilities.
- Commercial businesses and private firms (including A/E's).
- Regional or local planning boards.

2-2. FIELD INVESTIGATIONS.

a. Maps. If maps are not available, or do not provide satisfactory information or sufficient detail of the site, field surveys must be performed. Depending on the magnitude and complexity of the project, subsurface exploration with soil borings may be required. Topographic information should show locations of all streets, buildings, pavements, sidewalks, vegetation, drainage channels, and other land surface features such as utility manholes or structures, which may influence the design and layout of the collection system. Information on existing utilities should include the location of underground water lines, sanitary sewers, storm drains, gas mains, steam tunnels, electric conduits and similar facilities.

b. Soil Conditions. For larger projects, the character of the soil in which sewers will be constructed should be determined. The presence of rock, unfavorable soil conditions, or high groundwater table should be clearly established. The soil bearing capacity is needed for designing footings. Soil tests used to determine the need for corrosion control include earth resistivity, pH, oxidation-reduction potential, and relative moisture content.

c. Corrosion. If metal pipe, structures, or appurtenances are to be buried, the need for corrosion control must be assessed. The need for corrosion control should be based on data obtained from corrosion surveys, operating records, visual observations, inspections, and tests of existing facilities in the area and from manufacturers recommendations.

2-3. LAYOUT.

a. Service area. The requirement that an area be served by a wastewater pumping facility will in most cases be determined by topography. Building and grade elevations in the area generally will be too low for proper gravity drainage to an existing or proposed sewer system, or waste treatment facility. Thus, collection and pumping of wastes from these low lying areas will be necessary. In addition to topographic considerations, natural boundaries like waterways,

rivers, streams, etc., and property lines of Federal, state and local jurisdictions, also play a role in determining the size and limits of service areas.

b. Sewer System. The development of final sewer plans must await the final site plan, the completion of field surveys, and to some extent, the establishment of floor grades. However, the development of economical site plans often requires concurrent preliminary planning of the sewer system. The location of building and lateral sewers will depend not only upon topography, but also upon the type and layout of the buildings to be served. Normally, the most practical location would be along one side of the street. In other cases they may be located behind the buildings midway between streets. In still other cases, in closely built-up areas and particularly where the street is very wide or already paved, it may be advantageous and economical to construct laterals on each side of the street. Main, trunk, and interceptor sewers will follow the most feasible route to the point of discharge. All sewers will be located outside of roadways as much as practicable, so that the number of roadway crossings will be reduced to a minimum. A sewer from one building will not be constructed under another building, or remain in service where a building is subsequently constructed over it, if any other practical location for the sewer is available. Where no other location is suitable, necessary measures will be taken to assure accessibility for future excavation and complete freedom of the sewer from superimposed building loads. The following general criteria will be used where possible to provide a layout which is practical, economical and meets hydraulic requirements:

- Follow slopes of natural topography for gravity sewers.

- Check existing maps or field surveys along prospective sewer routes to assure that adequate slopes are available.

- Avoid routing sewers through heavily wooded areas and areas which require extensive restoration after construction.

- Check subsurface investigations for groundwater levels and types of subsoil encountered. If possible, avoid areas of high groundwater and the placement of sewers below the groundwater table.

- Locate manholes at changes in direction, size or slope of gravity sewers.

- Sewer sections between manholes should be straight. The use of curved sewer alignment is not recommended.

- Manholes should be located at intersections of streets when possible.

- Avoid placing manholes adjacent to water courses and in locations where the tops will be submerged or subject to surface water inflow.

- Designer should evaluate alternative sewer routes where applicable.

- Verify that final routing selected is the most cost effective alternative that meets service requirements.

c. Geographic Information System (GIS). At some installations, information on existing utilities is available on a GIS and the new design or the as-built drawings must be incorporated into the GIS. A Tri-Service Computer-Aided Design and Drafting/GIS (CADD/GIS) Standard is currently being developed and, once approved, will be utilized for all designs.

2-4. PUMPING STATION SITE SELECTION. The location of pumping facilities within a service area will be based primarily on topographic considerations and the need to provide for future development. Pump stations will be located so that all points within the intended service area can be drained adequately by gravity sewers. Any planned development within the service area, such as construction of new buildings or modifications to existing ones, or any projected shifts in population and/or workforce will be considered. This type of information is generally obtained from the installation master plans, or from personnel staffing requirements. It is a relatively simple matter to design a pumping station with capacity for future development by providing room for additional or larger pumps, motors, impellers, etc. However, the physical location of the station is more critical since it cannot be moved to accommodate new buildings or population increases. The following general guidelines for site selection and location of pumping stations will be used:

-Pumping facilities will not be constructed beneath buildings, streets, roadways, railroads, aircraft aprons or runways, or other major surface structures, to the maximum extent practical.

-Pump stations will not be located closer than 150 meters (500 feet) to buildings, or other facilities to be occupied by humans, unless adequate measures are provided for odor and gas control.

-Pumping stations at wastewater treatment facilities will normally be located, adjacent to, or in connection with, other plant elements as required for proper functioning of the treatment systems.

-The location of pumping stations will be made with proper consideration given to the availability of required utilities such as electric power, potable water, fire protection, gas, steam, and telephone service.

2-5. PUMPING STATION BUILDING AND SITE REQUIREMENTS.

a. Floor and building elevations. The invert elevations of incoming sewers will determine the depths of underground portions (substructure) of the pumping station. It is common practice to set the maximum liquid level in the wet well equal to the 80-90 percent flow depth of the lowest incoming sewer. Subsurface and soil conditions at the site will dictate the structural design, excavation depths, and top of footing elevations required for the foundation. Surface conditions such as adjacent buildings and site grading will determine the elevations of floors above ground (superstructure), except that the elevation of the ground floor will be set above the maximum expected flood level.

b. Architectural and landscaping. For pumping stations located in built-up areas, the architectural exterior of the buildings should be made similar to or compatible with, surrounding buildings. When the station is located in a remote area, building appearance is not important, but the possibility of future development in the vicinity will be considered. Pump stations and facilities will be provided with fencing where necessary to prevent vandalism, and to protect people from hazardous contact with electrical transformers and switching equipment. Landscaping should be considered in built-up areas, and will be required in residential communities. Where stations must be constructed in close proximity to residences or other quarters, buffer zones of planted shrubbery should be provided for noise reduction.

c. Access. All pump stations will be readily accessible from an improved road. For stations that are not enclosed, access will be provided for direct maintenance from a truck equipped with

hoist attachments. For enclosed stations, provisions will be included in the structure to facilitate access for repair, and to provide a means for removal and loading of equipment onto a truck.

2-6. PROTECTION OF WATER SUPPLIES. There must be no physical connection between a potable water line and the sewer system. Sewer design will meet the following criteria:

- Sewers will be located no closer than 15 meters (50 feet) horizontally to water wells or earthen reservoirs to be used for potable water supply.

- Sewers will be located no closer than 3 meters (10 feet) horizontally to potable water lines; where the bottom of the water pipe will be at least 300 millimeters (12 inches) above the top of the sewer, the horizontal spacing may be a minimum of 2 meters (6 feet).

- Sewers crossing above potable water lines must be constructed of suitable pressure pipe or fully encased in concrete for a distance of 3 meters (10 feet) on each side of the crossing. Force mains will have no joint closer horizontally than 1 meter (3 feet) to the crossing, unless the joint is encased in concrete. The thickness of the concrete encasement will be a minimum of 100 millimeters (4 inches) at pipe joints.

- Depressed sewers crossing potable water lines must be installed below the water line with a minimum vertical clearance of 600 millimeters (2 feet). Sewer joints will not be closer horizontally than 1 meter (3 feet) to the crossing, unless the joints are fully encased in concrete as required above.

CHAPTER 3

HYDRAULIC DESIGN OF SEWERS

3-1. QUANTITY OF WASTEWATER. For any segment of proposed sewer, the design wastewater flow must be determined. Sanitary or domestic wastes based on the population served by a given segment, extraneous infiltration/inflow, and contributing industrial flows must be added to produce the design flow. Where existing flow records or data showing required flow capacity are not available, the methods and criteria discussed below will be used to develop design flows.

a. Tributary area. This is the area contributing wastewater to a particular sewer segment. The quantity of wastewater which is collected by a particular segment is dependent upon the types of personnel and industrial activities which are regularly found in the area. Where no information is available on existing areas to be served, a survey will be required to determine the number and classification of personnel and the types of industries.

b. Sanitary or domestic wastes.

(1) Contributing population. Domestic wastewater quantities normally are to be computed on a contributing population basis, except as noted in subparagraphs d and e below. The population to be used in design depends upon the type of area which the sewer serves. If the area is strictly residential, the design population is based on full occupancy of all housing and quarters served. If the area served is entirely industrial, the design population is the greatest number, military and civilian, employed in the area at any time, even though some of these persons may also be included in the design of sewers in the residential area. For sewers serving both residential and industrial areas, the design population includes residents and nonresidents, but in the design of these sewers obviously no person should be counted more than once. Allowances will be made for future population changes based on facility personnel requirements and master planning projections.

(2) Average daily flow. Average daily per capita wastewater quantities for different types of installations and buildings are given in table 3-1. The average daily flow will be computed by multiplying the resident and nonresident contributing populations by the appropriate per capita allowances and adding the two flows. The average daily flow represents the total waste volume generated over a 24-hour period. However, it is not a realistic indicator of the rate of flow when wastes are generated over shorter periods of 8, 10, 12 hours, etc. Thus, the average daily flow will be used only for designing sewers to serve the entire installation, or large sections of the installation, and where a major portion of the wastewater is generated by residents over a 24-hour period.

Table 3-1. Domestic Wastewater Allowances

Allowances[1]

Type of Installation[2]	Liters/Capita/Day (Gallons/Capita/Day) Permanent Construction	Field Training
Army Posts, Forts, Camps, Airfields, Plants and Depots	380 (100)	135 (35)
Air Force Bases, Stations and Other Facilities	380 (100)	--
POW and Internment Camps	--	135 (35)
Type of Building		
Single Family Housing (per unit)	1150 (300)	--
Multi Family Housing (per unit)	950 (250)	--
BOQ and BEQ	265 (70)	75 (20)
EM Barracks	190 (50)	55 (15)
Hospitals (per bed)	1150-2300 (300-600)	380 (100)

Other buildings and establishments normally found on military installations, such as bowling alleys, theaters, clubs, cafeterias, laundromats, schools, shops, gasoline service stations, etc., will be assigned typical waste loading values obtained from standard textbooks.

))))))

the average daily flow would still be 115,000 L/d, or 115,000 liters in 24 hours, but the sewer must be designed hydraulically to carry the 115,000 liters in 8 hours, not 24 hours.

(4) Peak diurnal flowrate. The normal daily range of the rate of flow, or the diurnal pattern, is from approximately 40 percent to 250 percent of the average daily flow. The peak daily or diurnal flowrate is an important factor in sewer design, especially when minimum velocities are to be provided on a daily basis. The peak diurnal flowrate will be taken as one half of the extreme peak flowrate.

(5) Extreme peak flowrate. Extreme peak rates of flow occur occasionally and must be considered. Sewers will be designed with adequate capacity to handle these extreme peak flowrates. Ratios of extreme peak flowrates to average flows will be calculated with the use of the following formula:

$$R = \frac{C}{Q^{0.167}}$$

where:

R = ratio of extreme peak flowrate to average flow
Q = average daily flow or average hourly flowrate in liters per day (gallons per day), or liters per hour (gallons per hour), and
C = constant, 47.71 for L/d (38.2 for gpd) or 28.10 for L/h (22.5 for gph)

When designing sewers to serve the entire installation, or large areas of the installation, and where a major portion of the wastewater is generated by residents over a 24-hour period, the average daily flow will be used in the formula, and the extreme peak flowrate will be computed by multiplying the average daily flow by the ratio R. However, for sewers serving small areas of the installation where several buildings or a group of buildings are being considered, and where the majority of wastewater is generated by nonresidents or other short term occupants, the average hourly flowrate will be used in the formula, and the extreme peak flowrate will be computed by multiplying the average hourly flowrate by the ratio R. Examples illustrating the use of the above formula are provided in appendix B.

c. Infiltration and inflow. Extraneous flows from groundwater infiltration enter the sewer system through defective pipe, joints, fittings and manhole walls. Sources of inflow include connections from roof leaders, yard drains, storm sewers, cooling water discharges and foundation drains, in addition to submerged manhole covers.

(1) In computing wastewater flows for new sewers, design allowances for groundwater infiltration will be 45 to 95 liters/day per millimeter diameter per kilometer of pipe (500 to 1000 gallons/day per inch diameter per mile of pipe), and will be added to the peak rate of flow. For design of Air Force facilities, use 45 Lpd/mm/km (500 gpd/in/mi). Acceptance tests required for newly constructed sewers normally limit leakage to 45 Lpd/mm/km (500 gpd/in/mi).

(2) Where infiltration/inflow must be calculated from an existing collection system, attempts must be made to obtain flow records from treatment facilities or pumping stations which will provide information on the magnitude of I/I quantities. In the absence of such flow data, and depending on the scope of the project, it may be necessary to measure flows in the existing system. Where this is not possible or feasible, allowances of 23,500 to 235,000 Lpd/km (10,000

to 100,000 gpd/mile) of pipe may be used depending on the size and age of the sewers, materials of construction, and the soil and ground-water conditions. Installation personnel will usually have some knowledge of these matters and should be aware of major problems. Where I/I is known to be excessive, it should be determined prior to design if corrective measures are planned for the existing system, or if U.S. Environmental Protection Agency (EPA) evaluation and rehabilitation programs will be implemented.

d. Industrial waste flows. Industrial waste quantities from ordnance plants, technical laboratories, laundries, vehicle maintenance shops, airplane wash racks, plating shops, and such industries cannot be computed totally on a population or fixture unit basis. Flows from such plants depend upon the type and extent of the activities. Industrial waste sewers and sanitary sewers will be designed for the peak industrial flow as determined for the particular industrial process or activity involved.

e. Fixture unit flow. The size of building connections, including those from theaters, cafeterias, clubs, quarters, and other such buildings, will in all cases be large enough to discharge the flow computed on a fixture unit basis as set forth in the manual on plumbing, TM 5-810-5/AFM 88-8, chapter 4. This requirement applies to building connections only, and not to the lateral or other sewers to which they connect.

3-2. GRAVITY SEWER DESIGN. Sewers will be designed to discharge the wastewater flows as required by paragraph 3-1. Generally, it is not desirable to design sewers for full flow, even at peak rates. Flows above 90 to 95 percent of full depth are considered unstable, and may result in a sudden loss of carrying capacity with surcharging at manholes. In addition, large trunk and interceptor sewers laid on flat slopes are less subject to wide fluctuations in flow, and if designed to flow full may lack sufficient air space above the liquid to assure proper ventilation. Adequate sewer ventilation is a desirable method of preventing the accumulation of explosive, corrosive or odorous gases, and of reducing the generation of hydrogen sulfide. Therefore, trunk and interceptor sewers will be designed to flow at depths not exceeding 90 percent of full depth; laterals and main sewers, 80 percent; and building connections, 70 percent. However, regardless of flow and depth the minimum sizes to be used are 150 millimeter (6-inch) for building connections and 200 millimeter (8-inch) for all other sewers. Building connections that do not carry sanitary waste and will transport liquids with little or no solids, such as condensate lines, can be smaller than 150 millimeters (6 inches), but no smaller than 100 millimeters (4 inches) is recommended for most situations. Industrial applications will use the same design criteria as sanitary sewers except pipe material that is resistant to the waste will be specified. The following formula, charts, procedures and criteria will be used for design.

a. Design formula and charts. The Manning formula will be used for design of gravity flow sewers as follows:

$$V = \left(\frac{C}{n}\right) R^{2/3} S^{1/2}$$

where:

C = 1 for SI units (1.486 for IP units)
V = velocity in meters per second (feet per second)
n = coefficient of pipe roughness
R = hydraulic radius in meters (feet), and
S = slope of energy line in meters per meter (feet per foot)

(1) Roughness coefficient. Values of n to be used in the formula range from 0.013 to 0.015. The lowest n values apply to new or relatively new pipe (in sections greater than 1.5 m (5 feet)) with smooth interior surfaces, smooth bore, even joints, in excellent to good condition and well constructed. Higher n values are required for older pipe with rough interior surfaces, open or protruding joints, in fair to bad condition and poorly constructed. Values up to 0.017 are often justified for very old pipe (such as brick or block sewers) in extreme deterioration, or pipe very poorly constructed with improper alignment, sags and bellies, cracked or offset joints, broken wall sections or internal corrosion. Some manufacturers of plastic and asbestos cement pipe report n values of 0.009 to 0.011. However, due to uncertainties in design and construction, plus a desire to provide a margin of safety, n values smaller than 0.013 will not normally be permitted. Variation of n with depth of flow has been shown experimentally, and may be considered in designing sewers to flow partially full. A solution to the Manning formula for full pipe flow is shown in figure 3-1.

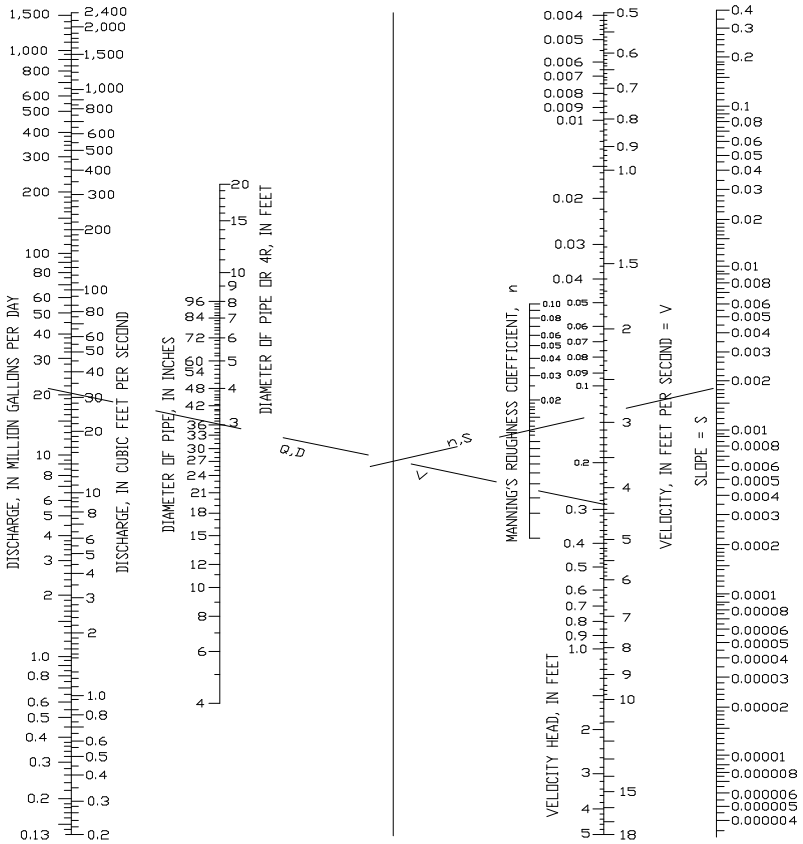

Figure 3-1. Chart for Manning formula

(2) Velocity. Sewers will be designed to provide a minimum velocity of 0.60 meters per second (2.0 feet per second) at the average daily flow, or average hourly flowrate, and a minimum velocity of 0.75 to 1.05 m/s (2.5 to 3.5 fps) at the peak diurnal flowrate, as determined in paragraph 3-1. When velocities drop below 0.30 m/s (1.0 fps) during periods of low flow, organic solids suspended in the wastewater can be expected to settle out in the sewer. Sufficient velocity (0.75 to 1.05 m/s (2.5 to 3.5 fps)) must be developed regularly, once or twice daily as a minimum, to resuspend and flush out solids which may have been deposited during low flows. A velocity of 0.75 m/s (2.5 fps) minimum is required to keep grit and sand suspended. However, new sewers which are properly designed and constructed should contain only minor quantities of grit or sand. Maximum velocity is set at 3.00 m/s (10.0 fps) in the event that grit becomes a problem.

(3) Slope. Assuming uniform flow, the value of S in the Manning formula is equivalent to the sewer invert slope. Pipe slopes must be sufficient to provide the required minimum velocities and depths of cover on the pipe. Although it is desirable to install large trunk and interceptor sewers on flat slopes to reduce excavation and construction costs, the resulting low velocities may deposit objectionable solids in the pipe creating a buildup of hydrogen sulfide, and thus will be avoided.

(4) Cover. Adequate cover must be provided for frost protection. Generally, a minimum 0.6 meters (2 feet) of earth will be required to protect the sewer against freezing. Where frost penetrates to a considerably greater depth and lasts for an appreciable length of time, the wastes may not contain sufficient heat to prevent the gradual cooling of surrounding earth and buildup of an ice film inside the pipe. Under these conditions, greater cover will be required. Sufficient cover must also be provided to protect the pipe against structural damage due to superimposed surface loadings. Concentrated and uniformly distributed loads are discussed in chapter 5.

b. Design procedure. After a preliminary layout has been made, a tabulation will be prepared in convenient form setting forth the following information for each sewer section:

- Designation of manholes by numerals or letters.
- Contributing populations - resident and nonresident.
- Design flows - average, daily peak, and extreme peak.
- Length of sewer.
- Invert elevations.
- Invert slope or gradient.
- Pipe diameter and roughness coefficient.
- Flow depths at design flows.
- Velocities at design flows.
- Depths of cover on the pipe - maximum and minimum.

c. Hydraulic profile. In most situations where small to medium sized gravity sewers are installed in long runs, it will be safe to assume uniform flow throughout the entire length of conduit. However, in cases where larger sewers, 600-millimeter (24-inch) diameter and above, are constructed in runs of less than 30 meters (100 feet), and with a number of control sections

where nonuniform flow may occur, a plot of the hydraulic profile is recommended. For process and plant piping at wastewater treatment facilities, a hydraulic profile is always required. Methods used to calculate and plot hydraulic profiles including backwater curves, drawdown curves and hydraulic jumps, will conform to those presented in standard hydraulics textbooks.

d. Critical flow. Gravity sewers will ordinarily be designed to maintain subcritical flow conditions in the pipe throughout the normal range of design flows. However, there are exceptions in which super critical flow may be required, and will be justified. Minimum sized sewers (150- and 200-millimeter (6- and 8-inch)) designed to discharge very low flows, must occasionally be placed on slopes steeper than critical in order to provide minimum velocities. In addition, small to medium sized sewers when required to discharge unusually large flows, may necessitate super critical slopes. Finally, steep slopes may be unavoidable due to natural topography and ground conditions. Where super critical flow will occur, care must be taken in the design to insure that downstream pipe conditions do not induce a hydraulic jump or other flow disturbance. Depths of flow within 10 to 15 percent of critical are likely to be unstable and will be avoided where pipes will flow from 50 to 90 percent full. Critical depths for various flows and pipe diameters can be obtained from standard hydraulics textbooks.

e. Computer programs. Numerous commercial computer programs are available for modeling, data management (such as location, diameter, depth, slope, and capacity of each sewer component), design, and analysis of sewer systems. As well as being used to design new systems, such programs can assist in assessing impacts of changes and additions to existing systems and thus help optimize designs. When the software interfaces with the design district's or installation's GIS system (generally Intergraph Microstation or Autocad), three-dimensional models allow designers to detect interference with other utilities.

3-3. REQUIRED PUMPING CAPACITY. Proper selection of the number and capacity of pumping units is dependent upon the quantity and variation of wastewater flows to be handled. Except as indicated below for small stations, pumping units will be selected to handle the normal daily range of wastewater flows generated in the service area. The number and capacity of pumps provided will be sufficient to discharge the minimum, average, peak daily and extreme peak flowrates. Pumping capacity will be adequate to discharge the peak flowrates with the largest pump out of service. Pumps utilized for treatment plant processes, recycling and bypassing of flows, etc., will be based on criteria developed in TM 5-814-3/AFM 88-11, Vol. 3. Consideration will be given to future conditions which may occur during the life of the station. Normally, where future development and population increases are projected for the area, pumps will be designed for initial conditions only, and the station will be provided adequate room for expansion of pumping capacity at a later date. Expansion of pumping capacity can be accomplished with the installation of additional pumping units, larger pumps, impellers, drive units, adjustable or variable speed drives. However, some situations may warrant provision of capacity for future increases initially, for economic or other reasons. Each case will be analyzed individually.

a. Small stations. Pumping stations required for small remote areas which generate extreme peak flowrates of less than 45 L/s (700 gpm), and where the possibility of future expansion is unlikely, and grinder pump installations serving three or more buildings, will be provided with two identical pumping units. Each pumping unit will be of the constant speed type, and will be capable of discharging the extreme peak wastewater flowrate. The station will be designed to alternate between zero discharge and peak discharge. This arrangement will provide 100 percent standby capacity to allow for necessary maintenance and repairs. Pneumatic ejector stations will be provided with duplex ejectors each sized for the extreme peak flowrate.

b. Large stations. Pumping stations serving large areas of the installation, and especially stations where the entire wastewater flow or major portions thereof must be pumped to the treatment facility, will be designed so far as practicable to operate on a continuous basis. The rate of pumpage must change in increments as the inflow to the station varies. This mode of operation will normally require two or more wastewater pumps of the constant or variable speed type, operating in single or multiple pump combinations, as required to match the incoming flowrates.

3-4. DEPRESSED SEWERS.

a. Velocity and flow analysis. Since a depressed sewer, or inverted siphon, is installed below the hydraulic grade line, the pipe will always be full of wastewater under pressure, even though there may be little or no flow. Thus, the design requires special care to secure velocities that will prevent clogging due to sedimentation of solids. The velocity should be as high as practicable, with a minimum requirement set at 1 meter per second (3.0 feet per second). Hydraulic calculations may be based on the Manning formula or Hazen-Williams analysis. A minimum Manning roughness coefficient of 0.015 is recommended due to possible accumulations of grease and other materials on pipe walls. The pipe will be as small as the available head permits except that pipe smaller than 150-millimeter (6-inch) is not permitted. Inasmuch as the sewer must be of sufficient size to discharge the extreme peak flows, better velocities for the normal range of flows can often be obtained by using several small pipes instead of one large pipe. This requires an entrance box equipped with a diversion gate for the periodic alternation of pipes in service and with an overflow weir so arranged that, when the flow exceeds the capacity of one pipe, the excess can overflow to the other pipes. However, conditions might be such that two or three pipes in lieu of one would not be advantageous or necessary. Each case will be analyzed individually.

b. Cleaning and inspection. Depressed sewers should be flushed frequently and inspected to make sure that obstructions are removed. Therefore, manhole structures or cleanout chambers will be required at each end of the sewer to allow access for rodding and pumping.

c. Pipe materials. Since a depressed sewer must withstand internal pressures greater than atmospheric, pipe materials required for use will be as indicated for force mains.

3-5. HYDROGEN SULFIDE IN SEWERS. Two of the most important problems occurring in wastewater collection systems are (l) the corrosion of sewers and appurtenances, and (2) the propagation and emission of odorous and toxic gases. Both of these problems can be attributed in large part to the generation of hydrogen sulfide (H_2S) in sewers. Reference is made to U.S. Environmental Protection Agency (EPA) publication, Process Design Manual for Sulfide Control in Sanitary Sewerage Systems, for a complete discussion of this topic. Sewers will be designed hydraulically in accordance with EPA guidelines established therein to prevent excessive generation of H_2S. In general, small diameter sewers designed to maintain velocities greater than 0.6 meters per second (2.0 feet per second), and sufficient air-to- wastewater contact, normally experience no significant buildup of H_2S. Larger sized sewers may be susceptible to H_2S formation, but rates of generation can be reduced through proper design, with concentrations limited to less than 1.0 milligram per liter.

a. Corrosion control. Where it is determined that the potential exists for damaging H_2S concentrations that will cause microbiological induced corrosion (MIC) or acid corrosion, such as new sewer connections to older systems with a history of H_2S problems and deteriorating sewers, pipe materials must be selected to resist MIC and attack from sulfuric acid. Chapter 8

describes various pipe materials and applications suitable for sewer use. As indicated, the pure plastics (PVC and ABS), fiberglass, and vitrified clay are best suited for corrosive environments, whereas concrete (including ABS composite), ductile iron, and cast iron soil pipe should be avoided unless special protective linings, coatings, or treatments are provided.

b. Sewer gases. In designing the sewer system, consideration will be given to the possibility of objectionable odors being emitted from manholes and sewers. As noted in paragraph a. above, new sewer connections to older systems with a history of H_2S problems will very likely experience similar difficulties. In these cases, sewers and manholes will be located such that emissions of odorous sewer gases, and in particular H_2S, do not create a nuisance or hazard for nearby building occupants.

CHAPTER 4

SEWER SYSTEM LAYOUT AND APPURTENANCES

4-1. MANHOLES.

a. Requirement. Manholes are required at junctions of gravity sewers and at each change in pipe direction, size or slope, except as noted hereinafter for building connections.

b. Spacing. The distance between manholes must not exceed 120 meters (400 feet) in sewers of less than 450-millimeters (18-inches) in diameter. For sewers 450-millimeters (18-inches) in diameter and larger, and for outfalls from wastewater treatment facilities, a spacing of up to 180 meters (600 feet) is allowed provided the velocity is sufficient to prevent sedimentation of solids.

c. Pipe connections. The crown of the outlet pipe from a manhole will be on line with or below the crown of the inlet pipe. Where conditions are such as to produce unusual turbulence in the manhole, and especially where the size of the outlet pipe is to be smaller than the inlet pipe because of the availability of a more favorable slope, it may be necessary to provide an invert drop to allow for entry head, or increased velocity head, or both. Where the invert of the inlet pipe would be more than 450 millimeters (18 inches) above the manhole floor, a drop connection will be provided.

d. Frames and covers. Manhole top elevations will be set to avoid submergence of the cover by surface water runoff and ponding. Where this is not possible, watertight covers will be installed to prevent storm water inflow. Bolting or locking devices will be included on covers to prevent unauthorized entry in areas designated by the using agency as secure. Frames and covers must be sufficient to withstand impact from wheel loads where subject to vehicular traffic. Covers of a nominal 30 inches or larger diameter shall be installed where personnel entry may occur.

e. Design standards. Where suitable Federal, Army, or Air Force standard drawings and specifications exist, they will be used for design of manhole structures, unless a special design is required. The following construction practices will be required:

- Smooth flow channels will be formed in the manhole bottom. Laying half tile through the manhole, or full pipe with the top of the pipe being broken out later, are acceptable alternatives.

- For manholes over 3.5 meters (12 feet) in depth, one vertical wall with a fixed side-rail ladder will be provided.

- Drop connections will be designed as an integral part of the manhole wall and base.

- In areas subject to high groundwater tables, manholes will be constructed of materials resistant to groundwater infiltration.

f. Materials of construction. The primary construction materials to be used for manhole structures are precast concrete rings; prefabricated PVC, high density polyethylene, and fiberglass units; and cast-in-place, reinforced or nonreinforced concrete. In the past, most

manholes were built of brick masonry, and are now frequently the source of significant volumes of groundwater infiltration. More recently in attempts to alleviate this problem, precast concrete, plastic, and fiberglass manholes have been utilized. In certain situations precast units will not be suitable, and cast-in-place reinforced concrete will be required. Cast-in-place construction permits greater flexibility in the configuration of elements, and by varying reinforcing the strength of similar sized structures can be adjusted to meet requirements. In general, materials used should be compatible with local construction resources, labor experience, and should be cost competitive.

4-2. BUILDING CONNECTIONS. Building connections will be planned to eliminate as many bends as practical and provide convenience in rodding. Bends greater than 45 degrees made with one fitting should be avoided; combinations of elbows such as 45-45 or 30-60 degrees should be used with a cleanout provided. Generally, connections to other sewers will be made directly to the pipe with standard fittings rather than through manholes. However, a manhole must be used if the connection is more than 30 meters (100 feet) from the building cleanout. Normally, the cleanout inside the building will not be adequate for complete rodding, thus outside cleanouts will be provided. Installation of a two-way cleanout at the building connection (1.5 meters (5 feet) from the footing) is recommended. Manholes will be installed where cleanouts are not feasible.

4-3. CLEANOUTS. Cleanouts must be installed on all sewer building connections to provide a means for inserting cleaning rods into the underground pipe. An acceptable cleanout will consist of an upturned pipe terminating at, or slightly above, final grade with a plug or cap. Preferably the cleanout pipe will be of the same diameter as the building sewer, and never smaller than 150 mm (6 inches).

CHAPTER 5

STRUCTURAL DESIGN OF SEWERS

5-1. GENERAL. The structural design of a sewer requires that the supporting strength of the pipe as installed, must equal or exceed the external loading multiplied by a factor of safety. The following criteria for structural design of sewers are based on the assumption that sewers will be laid in open trenches entirely below natural ground surface and backfilled with suitable materials, that the sides of the trench will be nearly vertical below the top of the pipe and will have slopes no flatter than one horizontal to two vertical above the pipe, and that the trench width at the top of the pipe will be relatively narrow. In general, the trench width will be limited to the maximum allowed or recommended by the pipe manufacturer. Special cases involving sewer installation in unsatisfactory soil, rock, embankments or fills, sewers requiring jacking, boring or tunneling, and pipe placed above ground, are too rare to warrant lengthy consideration in this manual. Paragraph 5-4 contains a general discussion of such situations. Sewers installed in cold regions or in seismic zones will require special design considerations.

5-2. LOADS ON SEWERS. There are three kinds of external loads to which a sewer laid in a trench may be subjected. They are (l) loads due to trench filling materials, (2) uniformly distributed surface loads, such as stockpiled materials or loose fill, and (3) concentrated surface loads, such as those from truck wheels.

a. Trench fill loads. The Marston formula will be used for calculating loads on rigid conduits as follows:

$$W_t = C_t w B_t^2$$

where:

W_t = vertical load on conduit in kilograms per lineal meter (pounds per lineal foot)
C_t = trench load coefficient for buried conduits
w = unit weight of trench fill materials in kilograms per cubic meter (pounds per cubic foot), and
B_t = horizontal width of trench at top of pipe in meters (feet)

For calculation of loads on flexible conduits the prism formula will be used as follows:

$$W_t = H w B_c$$

where:

H = height of fill from top of pipe to ground surface in meters (feet), and
B_c = horizontal width or outside diameter of pipe in meters (feet).

The unit weight of soil backfill normally varies from a minimum of 1600 to a maximum of 2160 kilograms per cubic meter (100 to 135 pounds per cubic foot). In the absence of soil density measurements, the weight per cubic meter (cubic foot) of various materials may be taken as

1920 kilograms (120 pounds) for mixed sand and gravel, 1760 kilograms (110 pounds) for saturated top soil (loam and silt), 1920 kilograms (120 pounds) for ordinary damp clay, and 2080 kilograms (130 pounds) for saturated clay. The load coefficient C_t is a function of the fill height H divided by the width of trench B_t. An examination of the Marston formula will show the importance of the trench being as narrow as practicable at and below the top of the pipe.

b. Uniformly distributed loads. Newmark's modification to the classical Boussinesq equation results in the following formula to be used for calculating distributed loads on rigid and flexible conduits.

$$W_d = C_s p F B_c$$

where:

W_d = vertical load on the conduit in kilograms per lineal meter (pounds per lineal foot)
C_s = surface load coefficient for buried conduits
p = intensity of distributed load in kilograms per square meter (pounds per square foot)
F = impact factor, and
B_c = horizontal width or outside diameter of pipe in meters (feet).

The load coefficient C_s is dependent upon the area over which the load p acts. It will be selected from table 5-1 as a function of the area width D and length M, each divided by twice the height of fill H. The impact factor F will be determined with the use of the table 5-2.

Table 5-1. Surface load coefficient
Values of load coefficients, C_s, for concentrated and distributed
Superimposed loads vertically centered over conduit

D/2H or B_c/2H	M/2H or L/2H													
	0.1	0.2	0.3	0.4	0.5	0.6	0.7	0.8	0.9	1.0	1.2	1.5	2.0	5.0
0.1	0.019	0.037	0.053	0.067	0.079	0.0890	0.097	0.103	0.108	0.112	0.117	0.121	0.124	0.128
0.2	0.037	0.072	0.103	0.131	0.155	.174	0.189	0.2020	0.211	0.219	0.229	0.238	0.244	0.248
0.3	0.053	0.103	0.149	0.190	0.224	0.252	0.274	.292	0.306	0.318	0.333	0.345	0.355	0.360
0.4	0.067	0.131	0.190	0.241	0.284	0.320	0.349	0.373	0.391	0.405	0.425	0.440	0.454	0.460
0.5	0.079	0.155	0.224	0.284	0.336	0.379	0.414	0.441	0.463	0.481	0.505	0.525	0.540	0.548
0.6	0.089	0.174	0.252	0.320	0.379	0.428	0.467	0.499	0.524	0.544	0.572	0.596	0.613	0.624
0.7	0.097	0.189	0.274	0.349	0.414	0.467	0.511	0.546	0.584	0.597	0.628	0.650	0.674	0.688
0.8	0.103	0.202	0.292	0.373	0.441	0.499	0.546	0.584	0.615	0.639	0.674	0.703	0.725	0.740
0.9	0.108	0.211	0.306	0.391	0.463	0.524	0.574	0.615	0.647	0.673	0.711	0.742	0.766	0.784
1.0	0.112	0.219	0.318	0.405	0.481	0.544	0.597	0.639	0.673	0.701	0.740	0.774	0.800	0.816
1.2	0.117	0.229	0.333	0.425	0.505	0.572	0.628	0.674	0.711	0.740	0.783	0.820	0.849	0.868
1.5	0.121	0.238	0.345	0.440	0.525	0.596	0.650	0.703	0.742	0.774	0.820	0.861	0.894	0.916
2.0	0.124	0.244	0.355	0.454	0.540	0.613	0.674	0.725	0.766	0.800	0.849	0.894	0.930	0.956

c. Concentrated loads. The formula to be used for calculating concentrated loads on rigid and flexible conduits is a modified form of the Boussinesq equation developed by Holl, and is as follows:

$$W_c = C_s PF/L$$

where:

W_c = vertical load on the conduit in kilograms per lineal meter (pounds per lineal foot)
C_s = surface load coefficient for buried conduits
P = concentrated load in kilograms (pounds)
F = impact factor, and
L = effective length of conduit in meters (feet).

An effective length of 0.914 meters (3 feet) will be used in all cases, except where pipe lengths are less than 0.914 meters (3 feet), in which case the actual length of pipe will be used. The load coefficient C_s is a function of conduit width B_c and effective length L, each divided by twice the height of fill H. Determination of the load coefficient will be by the use of table 5-1, and impact factor F will be selected from table 5-2. It will be noted from table 5-1 that the effect of a concentrated or distributed load diminishes rapidly as the amount of cover over the sewer increases.

Table 5-2. Impact factor (F) vs. height of Cover

Height of Cover, m. (ft.)	Installation Surface Condition			
	Highways	Railways	Runways	Taxiways, Aprons Hardstands, Run-up Pads
0 to 0.35 (0 to 1)	1.50	1.75	1.00	1.50
0.35 to 0.65 (1 to 2)	1.35	*	1.00	**
0.65 to 1.00 (2 to 3)	1.15	*	1.00	**
Over 1.00 m (Over 3')	1.00	*	1.00	**

** Refer to data available from American Railway Engineering Association (AREA)*
*** Refer to data available from Federal Aviation Administration (FAA)*

Note that for a static load, F = 1.0
Source: Handbook of PVC Pipe-Design and Construction by Uni-Bell PVC Pipe Association, Dallas, Texas, Copyright 1977,1979, p. 133.

5-3. SUPPORTING STRENGTH OF SEWERS. A sewer's ability to resist external earth and superimposed loads depends not only on the pipe's inherent structural capability, but also on the method of installing the pipe in the trench, i.e., class of bedding, type of backfill materials and soil compaction effort, etc.

a. Rigid conduit. Pipe strength in general will be determined by the three-edge bearing test or TEBT (termed crushing strength in various pipe specifications) and is expressed in kilograms per lineal meter (pounds per lineal foot). However, since this does not represent the actual field loading conditions, a relationship must be established between calculated load, laboratory test strength and field support strength. The definitions and terminology listed below will be used to develop this relationship. The total load must not exceed the safe supporting strength.

- Field support strength is the maximum load in kilograms per lineal meter (pounds per lineal foot) which the pipe will support when installed under specified trench bedding and backfill conditions.

- The load factor is the ratio of the field support strength to the TEBT, and will be selected from figure 5-1 depending on the class of bedding used.

- Safe supporting strength is the field support strength divided by a factor of safety, equal to 1.5 for rigid conduits.

- An additional parameter is the working strength, which is the three-edge bearing strength divided by the factor of safety.

For piping not tested and rated by the TEBT method, other strength criteria will be applied as follows. Reinforced concrete pipe strength will be based on D-loads at the 0.25-mm (0.01-inch) crack load and/or ultimate load as described in the Concrete Pipe Handbook published by the American Concrete Pipe Association. For ductile iron pipe, ANSI A21.50 will be used to calculate the required pipe thickness classification in relation to field loadings. See paragraph 8-1 for additional information. The strength of cast iron soil pipe, which normally will be used for building connections only, should be evaluated as outlined in the Cast Iron Soil Pipe & Fittings Handbook published by the Cast Iron Soil Pipe Institute.

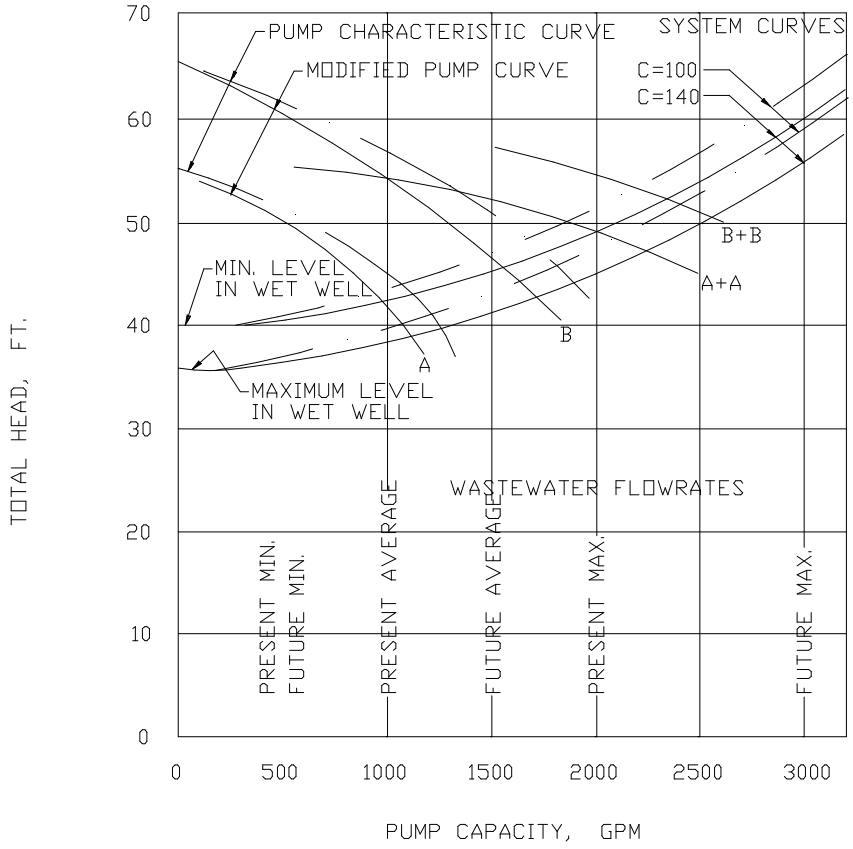

Figure 5-1. Load factors and class of bedding

b. Flexible conduit. The capability to resist pipe deflection and buckling under loads is the primary criterion used in the structural design of flexible conduit. When loaded the pipe walls will deflect, thereby creating a passive soil support at the sides of the conduit. This pipe-soil system is essential in providing a high effective strength, often enabling it to out perform rigid pipe under identical loading and soil conditions. While the three-edge bearing strength is an appropriate measure of load carrying capacity for rigid conduits, it is not applicable for describing flexible pipe stiffness. Because a flexible conduit must successfully interact with the surrounding soil to support its load, the method of backfill placement, types of materials used, soil compaction, etc., are more critical than trench width or bedding. Since the theories describing flexible pipe behavior, stiffness and deflections under load are lengthy, and the formulas cumbersome to use, they will not be presented in this manual. The same is true with less flexible plastic pipes such as acrylinitrile butadiene-styrene and profile wall PVC (ribbed or corrugated). The methods and procedures adopted in the Handbook of PVC Pipe Design and Construction by the Uni-Bell PVC Pipe Association, and WEF Manual of Practice FD-5 will be used in design. The project specifications will be prepared to reflect the stringent installation and construction requirements

for flexible pipe.

c. Pipe installation.

(1) Bedding. Figure 5-2 depicts various classes of bedding generally used when installing sewers. A complete discussion of each class is contained in several engineering publications, including WEF Manual of Practice FD-5 and the Clay Pipe Engineering Manual by National Clay Pipe Institute (NCPI). The designer should refer to these when selecting a pipe bedding system. When the class and type of bedding have been chosen, the bedding materials will be coordinated with and identified in the specifications, and the types and sizes will be shown on the drawings.

(2) Backfill and compaction. Backfill materials and compaction requirements will be included in the specifications. The possible use of locally available materials for backfill will be investigated. Compaction requirements will be designated for the particular soil and moisture content at the site.

(3) Installation manuals for the particular types of pipe to be specified will be reviewed to ascertain that bedding, backfill and compaction are adequate for the existing subsurface conditions at the site.

5-4. SPECIAL DESIGNS.

a. Unsatisfactory soil conditions. Information on subsurface conditions must be obtained from borings, drill holes, or test pits prior to design of the sewer system. Soil considered too unstable for use as pipe bedding or backfill consists of silt, quicksand, peat bog, muck and other organic materials. Where these materials exist, the following procedures will be used to provide a suitable pipe bedding.

(1) In situations where unstable materials occur at shallow depths, it will generally be acceptable to over excavate native soil to just below the trench bottom, and replace with a layer of crushed stone, gravel or other coarse aggregate. Concrete or wooden cradles can be used in lieu of aggregates.

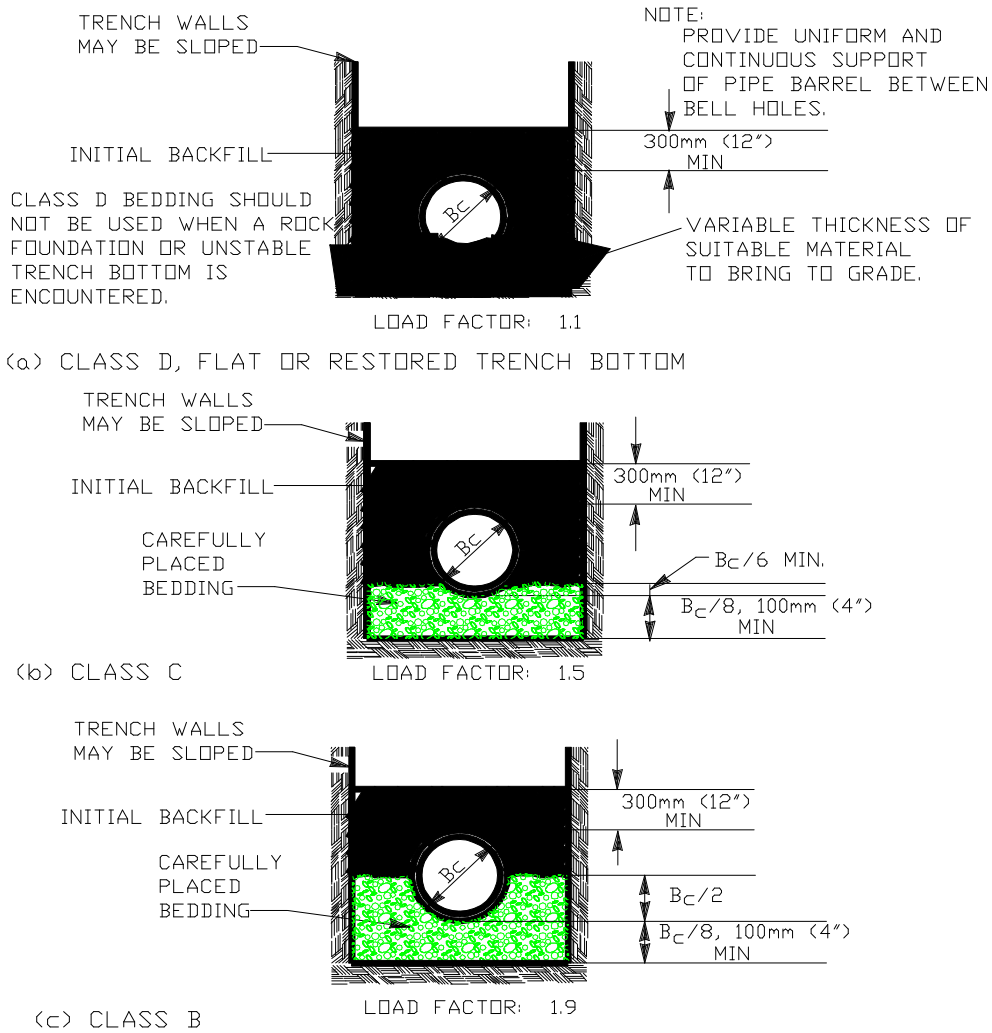

Figure 5-2. Bedding

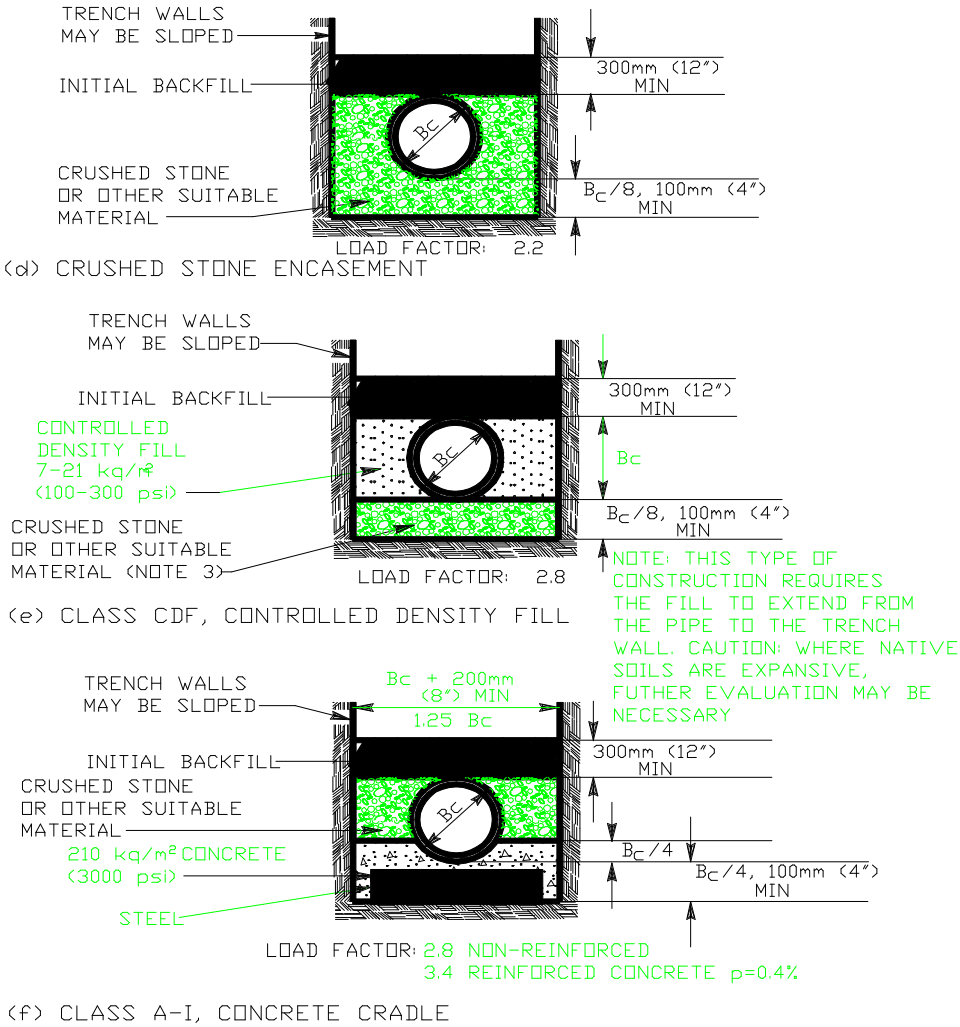

Figure 5-2 Bedding (continued)

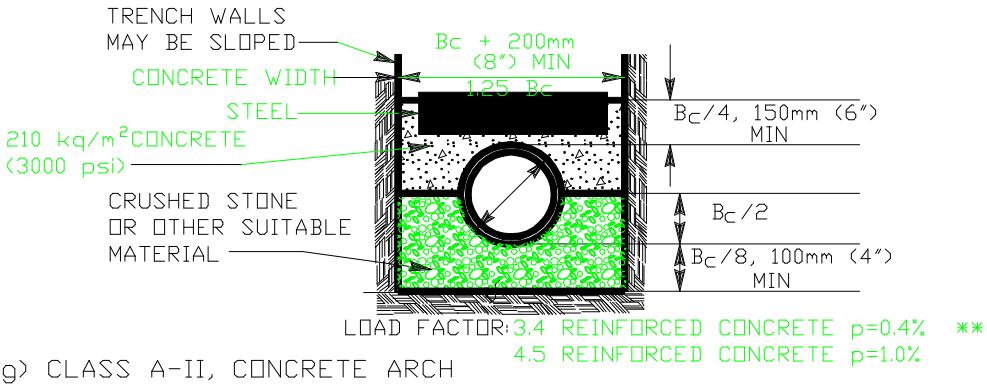

(g) CLASS A-II, CONCRETE ARCH

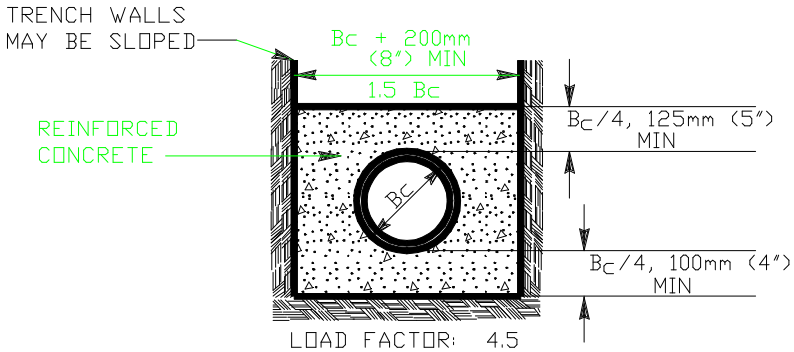

(h) CLASS A-IV, CONCRETE ENCASEMENT

THIS TYPE OF CONSTRUCTION SHOULD BE DESIGNED BY A REGISTERED STRUCTURAL ENGINEER, AND MAY YIELD HIGHER LOAD FACTORS THAN INDICATED.

Adapted from Clay Pipe Engineering Manual by National Clay Pipe Institute, 1995, p. 51-54

Figure 5-2. Bedding (concluded)

(2) Where unstable soil extends to considerable depths, more stringent measures must be taken. The sewer will be fully encased in concrete and supported on piles at each end. The pipe and encasement will be designed to act as a beam when the span distance is relatively short.

(3) For extremely severe cases, where unsatisfactory material covers a large area, and extends well below the trench bottom, a row of piling capped with concrete or wood cradles will be required to support the sewer. Dwarf piling may be suitable substitute for conventional piling in certain situations.

b. Installation in rock. Where sewers must be constructed in rocky terrain, trenches will be sufficiently wide to provide clearance between the sides and bottom of the pipe, and any rock in the trench. Pipe must be installed to avoid all contact with rock, or any other unyielding material in the trench. A granular type bedding or concrete cradle will normally be provided along the pipe bottom, and trenches will be backfilled with satisfactory materials.

c. Sewers in embankments. The need to install sewers above original ground surface in an embankment or fill does not arise frequently at military installations. Occasionally, an embankment will be required in low lying areas to raise the grade, or will be provided to avoid placing sewers aboveground, as discussed below.

d. Aboveground sewers. Sewers are normally laid underground, and at sufficient depths to be protected from impact and freezing. However, in cases where valleys, watercourses, structures, or other obstacles must be crossed, it is sometimes more advantageous to install sewers aboveground. Sewers supported from bridges, piers, suspension cables, or pipe beams, etc., will be designed with adequate structural capability. Protection against freezing and prevention of leakage are important design considerations. Expansion jointing may also be required.

e. Jacking, boring, tunneling, and microtunneling. In situations where sewers must be constructed more than 5 to 6 meters (15 to 20 feet) below ground surface, through embankments, under railroads, primary access roads, or airfield pavements, or where the Facility Engineer determines that conditions make it difficult or impractical to excavate open trenches, it will be necessary to install the pipe by other methods. In these cases, pipe may be pushed, jacked, bored, tunneled or microtunneled into place. A casing pipe will normally be required for sewers installed using these methods except for microtunneling in which rigid pipe is pushed, jacked, bored, or tunneled into place. A casing pipe will always be required to protect sewers under railroads, primary access roads, and airfield pavements. The void space between the sewer pipe and casing will be filled with special aggregates capable of being blown into place, or with commercially available polyethylene or other type spacers, saddles, and seals. Depending on soil resistance, rigid extra strength pipe can be forced underground by machine for distances of 15 to 45 meters (50 to 150 feet). Commercially available machines used hydraulic power to produce forces ranging from 29 to 670 kilonewtons (6500 to 150,000 pounds). Horizontal boring (augering) and reaming machines placed in excavated pits simultaneously remove material and hydraulically jack extra strength pipe through the ground in sizes up to 900 millimeters (3 feet) in diameter.

f. Anchoring Sewers. Normally sewers do not have to be anchored in place. However large lines laid underwater or below the high groundwater level may have to be anchored, using saddles and piling or concrete, to avoid floating. Guidance from the pipe manufacturer should be used in designing anchoring

systems. Due to its weight concrete pipe minimizes but may not eliminate the need to be anchored to prevent floating.

g. Design guidance. The methods and procedures described in WEF Manual of Practice No. 9 for designing sewer installations in unsatisfactory soil, rock, embankments, microtunneling, and by tunneling, microtunneling, jacking, boring, etc., will be adopted. Sewer piping installed in areas subject to earthquake damage will include seismic design as required by TM 5-809-10/AFM 88-3, chapter 13. Cold region facilities will be designed in accordance with TM 5-852-5.

CHAPTER 6

PUMPING STATION AND EQUIPMENT

6-1. TYPE OF CONSTRUCTION. A classification of pumping stations by capacity and the method of construction normally utilized for that capacity is provided in Table 6-1. Factory assembled pumping stations, commonly referred to as package type stations, are manufactured in standard sizes and are shipped from the factory in modules with all equipment and components mounted, installed, and ready for connection. These type stations will be suitable for low flows, and where the need to protect pumps from clogging is minimal. Conventional field erected pumping stations are designed for a particular location and to meet specific requirements. Field constructed stations will be used where the quantity of flow or its variation, or both, exceeds the capacity of available factory assembled stations, or where site conditions require the use of special designs or construction methods.

Table 6-1. Classification of Pumping Stations.

Class/Type	Recommended Capacity Range L/s	(gpm)
Factory Assembled (Package Type)		
Pneumatic Ejectors	2-13	(30-200)
Wet Pit Submersible Pumps	6-30	(100-500)
Dry Pit Pumps	6-125	(100-2,000)
Conventional Field Erected		
Small	18-95	(300-1,500)
Intermediate	95-630	(1,500-10,000)
Large	over 630	(over 10,000)

Note: Package type, dry pit pump stations in the capacities shown are generally available off-the-shelf. However, station capacities up to 315 liters per second (5,000 gallons per minute) can be obtained by special order.

6-2. PUMPS.

a. Centrifugal pumps. The centrifugal pump is the predominate type of wastewater pump used. These pumps are available in three variations, radial flow, mixed flow, and axial flow. Centrifugal pumps will not be used in capacities of less than 6 liters per second (100 gallons per minute).

(1) Radial flow pumps. The radial flow centrifugal pump is the major type used for pumping raw wastes. In a radial flow pump, the fluid enters the impeller axially and is discharged at right angles to the shaft. Two types of radial flow pumps are available, single suction and double suction. In a single-end suction pump, fluid enters the impeller from one side. The shaft does not extend into the suction passage, and because of this, rags and trash do not clog the pump. The single-end suction pump will be suitable for handling untreated wastewater. For a double suction pump, fluid enters the impeller from both sides, however the shaft extends into the

suction passage, thereby limiting its use to handling only clear water. Radial flow centrifugal pumps are available in discharge sizes of 50 to 500 millimeters (2 to 20 inches). However, pumps with a capacity to pass 75-millimeter (3-inch) minimum solids will be required. The recommended capacity range for these pumps is 6 to 1,260 L/s (100 to 20,000 gpm). Pumps are available in discharge heads of 8 to 60 meters (25 to 200 feet) total dynamic head (TDH). Peak design efficiency ranges from 60 percent for smaller pumps to 85 percent for larger pumps. Radial flow pumps are suitable for either wet well or dry well applications. They can be installed with horizontal or vertical shafting, however, vertical shaft pumps require considerably less space.

(2) Mixed flow pumps. The mixed flow centrifugal pump is an intermediate design between the radial flow type and the axial flow type, and has operating characteristics of both. The mixed flow pump is designed with wide unobstructed passages, and is therefore suitable for handling wastewater or clear water. Mixed flow centrifugal pumps are available in 200-millimeter through 2100-millimeter (8-inch through 84-inch) discharge sizes. The recommended capacity range for these pumps is 60 to 5,000 L/s (1,000 to 80,000 gpm). Pumps are available to operate at 3 to 18 meters (10 to 60 feet) TDH. Peak design efficiency depends on the size and characteristics of the individual pump, but generally ranges from 80 to 90 percent. Mixed flow pumps are used only in dry well applications, with either horizontal or vertical shafting configuration.

(3) Axial flow pumps. Axial flow centrifugal pumps will not be used to pump raw untreated wastewater. This pump is designed primarily for clear water service and for wet well installations. The pump is furnished with vertical shaft having a bottom suction, with the propeller mounted near the bottom of the shaft and enclosed in a bowl. The propeller is totally submerged and can be clogged by large solids, rags or trash. Therefore, this pump will only be used for clear well applications. Axial flow centrifugal pumps are available in 200-millimeter through 1800-millimeter (8-inch through 72-inch) discharge sizes. The recommended capacity range for these pumps is 30 to 6,300 L\s (500 to 100,000) gpm. Pumps are available to operate from 0.3 to 12 meters (1 to 40 feet) TDH.

(4) Pump construction. Centrifugal wastewater pumps will normally be constructed of cast iron with bronze or stainless steel trim, and with either cast iron or bronze impellers. When operating in wastewater containing substantial quantities of grit, impellers made of bronze, cast steel or stainless steel will be required. Enclosed impellers will be specified for waste water pumps required to pass solids. Pump casings of the volute type will be used for pumping raw untreated wastes and wastewaters containing solids. Diffusion or turbine type casings may be utilized for effluent or clear water service at waste treatment facilities. Pump shafts will be high grade forged steel, and will be protected by renewable bronze or stainless steel sleeves where the shaft passes through the stuffing box. Stuffing boxes will utilize either packing glands or mechanical type seals.

(5) Stuffing box seals. The stuffing box will be lubricated and sealed against leakage of wastewater (into the box) by grease, potable water, or another clear fluid. The lubricating and sealing medium will be supplied to the stuffing box at a pressure of 35 to 70 kPa (5 to 10 psi) greater than the pump shutoff head. Grease seals are usually provided by cartridges which are either spring loaded or pressurized by connections off the pump discharge. These arrangements generally do not maintain sufficient seal pressure on the stuffing box. However, they will be acceptable for low head pumps and where the wastewater contains little grit, as when pumping treated effluent. When pumping raw untreated wastes containing the usual quantities of grit, a potable water seal system with seal pump will be required if a potable water line is accessible

within a reasonable distance. The water seal system will be capable of supplying 0.2 L/s (3 gpm) per pump minimum. The principal advantage of a water seal over a grease seal is the positive pressure maintained on the stuffing box by the seal pump, and small amount of water which flows from the stuffing box into the pump casing. Grit and other abrasive materials that may be in the wastewater are thereby prevented from entering the stuffing box, thus reducing wear on the shaft and packing. The advantage of less frequent repairs to the shaft and less frequent repacking should be considered in relationship to the cost of providing the water line and other necessary facilities for the water seal. Where freezing of seal water is likely to occur, protective measures will be taken. There must not be, under any circumstances, a direct connection between wastewater pumps and the potable water system, nor any possibility of backflow of wastes into the potable water system. Air Force facilities will comply with AFM 85-21.

b. Screw pumps. The screw pump is classified as a positive displacement pump, and as such, maintains two distinct advantages over centrifugal pumps. It can pass large solids without clogging, and can operate over a wide range of flows with relatively good efficiencies. Screw pumps are normally available in capacities ranging from 10 to 3150 L/s (150 to 50,000 gpm) with a maximum lift of 9 meters (30 feet). Because of its nonclog capabilities and wide pumping range, the screw pump is best suited for lifting raw untreated wastewater into the treatment facility, and for the pumping of treated effluent. Its use in sludge pumping is discussed in TM 5-814-3/AFM 88-11, Vol. 3. Also, when treatment plants are upgraded, screw pumps may be installed to overcome the additional head losses created by new treatment units, so that existing discharge facilities can be retained. Screw pumps are usually driven by a constant speed motor with gear reducer, and are inclined at angles of 30 to 38 degrees from the horizontal. In most instances, screw pumps will be installed outdoors with only the drive unit enclosed.

c. Pneumatic ejectors. Pneumatic ejector stations will generally be used only in situations where quantities of wastes are too small for more conventional pumps, and where future increases in waste flows are projected to be minimal. A pneumatic ejector consists of a receiving tank, inlet and outlet check valves, air supply, and liquid level sensors. When the wastewater reaches a preset level in the receiver, air is forced in ejecting the wastewater. When the discharge cycle is complete, the air is shut off and wastewater flows through the inlet into the receiver. Generally, duplex ejectors operate on a 1-minute cycle, filling for 30 seconds and discharging for 30 seconds. Thus, each receiver tank will be equal in volume to 30 seconds of the extreme peak flowrate. Pneumatic ejector stations are available in capacities ranging from 2 to 13 L/s (30 to 200 gpm) with recommended operating heads up to 18 meters (60 feet) TDH. A typical ejector installation will include duplex units with two compressors, receivers, level sensors, etc.

d. Grinder pumps. Grinder pumps shred solids normally found in domestic wastewater, including rags, paper and plastic, into a slurry. The slurry can be pumped under low head through pressure sewers as small as 32 millimeter (1-1/4 inches) in diameter. Grinder pumps are for submersible installation, with a recommended operating range of 0.6 to 6 L/s (10 to 100 gpm). These pumps are available in discharge heads of 3 to 45 meters (10 to 150) feet TDH. The peak design efficiency is generally very low. Grinder pumps will be used only to handle domestic type wastes from one or more individual buildings, and only in remote areas or areas where gravity sewers and centralized pumping facilities are not feasible (see paragraph 1-3b).

6-3. PUMP DRIVES.

a. Electric motors. As a general rule, electric motors will be provided as the primary drive unit in sanitary and industrial wastewater pumping stations. Small pump stations serving remote

areas where electric power is not available, will usually require engine drives. The three types of electric motors most commonly used in wastewater pumping are (1) squirrel-cage induction, (2) wound-rotor induction, and (3) synchronous. Squirrel-cage induction motors will normally be selected for constant speed pump applications because of their simplicity, reliability and economy. They can also be used for variable speed operation when provided with the proper speed control. Synchronous motors may be more economical for large capacity, low rpm, constant speed pumps. Wound-rotor induction motors are most commonly used for pumps requiring variable speed operation. For a 60 cycle, alternating current power supply, the maximum synchronous motor speed allowed for wastewater pumps will be 1800 rpm (approximately 1770 rpm induction speed). The normal range of speeds is from 600 to 1200 rpm, with speeds below 450 rpm unusual at military installations. Lower speed pumps and motors are larger and more expensive, but generally are more reliable. The selection of electric motors will depend upon the type, size and location of the pumps, type of speed control used, and the power available at the site. Pump location will determine the type of motor enclosure. For dry pit pump installations, motor enclosures will normally be the open, drip proof type. Pumps installed outdoors, or in dirty or corrosive environments, will require totally enclosed motors. Submersible pumps will have motor enclosures which are watertight. Motors installed outdoors will have temperature ratings adjusted to suit ambient operating conditions. For pumps designed to operate on an intermittent basis, space heaters will be provided in motor housings to prevent condensation. Motors installed in wet wells will be explosion proof. Motor starting equipment will be selected in accordance with paragraph 7-3, and will be suitable for the type of motor and the required voltage. Motor starters will be designed for limiting the inrush current where shocks or disruptions to the electrical supply are likely to occur as a result of pump start-up. Where low starting inrush current is required for constant speed pumps, such as when using engine driven generator sets, wound-rotor motors will be considered as an alternative to squirrel-cage motors. The voltage required for operation of motors and other equipment will be determined in accordance with paragraph 9-6.

b. Internal combustion engines. Internal combustion engines (I.C.) engines will be used primarily at large pumping stations where electric motors are the primary drive units, and where emergency standby facilities are required. Conditions which dictate the use of fixed, standby power at wastewater pumping stations are outlined in paragraph 9-7. I.C. engines will be required for small pump stations in remote locations where no electric power source exists. At large wastewater treatment plants where abundant digester gas is produced, it will generally be more feasible to use I.C. engines which are fueled by the waste gas. I.C. engines may be arranged to drive horizontal pumps by direct or belt connections, or they may drive vertical pumps through a right angle gear drive with an electric motor as the primary drive unit (dual drive). It is more common however, and will be the general rule at large pump stations, to provide fixed emergency generator sets powered by I.C. engines. Generators produce electric power not only for pumps, but also for auxiliary equipment such as heaters, lights, alarms, etc., and for critical pump control systems. The types of internal combustion engines normally used include (1) diesel, (2) gasoline, (3) natural gas, primarily digester gas, and (4) dual-fuel diesel. The use of gasoline engines for anything except small, remotely located pumping stations is not recommended due to the hazards associated with fuel handling and storage. Dual-fuel diesel engines fire a mixture of diesel oil and natural gas, with a minimum of 10 percent diesel fuel required to ignite the mixture. Propane is usually provided as a backup fuel for gas and dual-fuel diesel units. The selection of I.C. engines will be coordinated with the installation's Facility Engineer to insure that adequate operation and maintenance can be made available.

6-4. DRIVE MECHANISMS.

a. Direct drive. Direct drive, with the shaft of the drive unit directly connected to the pump shaft, is the most common configuration. This connection can be either close-coupled or flexible-coupled. When using a close-coupled connection, the pump is mounted directly on the drive shaft. This is the normal arrangement for a vertical pump driven by an electric motor. A horizontal pump will usually have a flexible connection, with the engine mounted adjacent to the pump. A vertical motor mounted above, and at a distance from a vertical pump, will be connected to the pump with one or more lengths of flexible shafting. Direct drive offers the most efficient operation because no power is lost between the drive unit and the pump.

b. Belt drive. Belt drives may be utilized if the pump speed is different from those available with standard drive units, or if speed adjustment is required. Speed adjustment is accomplished by changing pulley or sheave ratios. Belt drives used with horizontal pumps require more floor space than a direct drive unit. There is power loss through the belt, which results in lower efficiency, and belt wear increases maintenance requirements. Belt drives will be used only when it is not possible to choose single speed equipment to cover service conditions, or where pump speed adjustments may be required, but variable speed operation is not.

c. Right angle drive. Right angle drives will be used on vertical pumps being driven by horizontal engines. If the engine serves as emergency standby, a combination gear box will be installed on the angle drive to allow operation of the pump by the primary drive unit, which is normally an electric motor. A clutch or disconnect coupling disengages the right angle gear when the motor drives the pump. When the engine drives the pump, the clutch is engaged and the motor rotates freely. In case of a power failure the engine is automatically started, and after reaching partial operating speed is engaged to drive the pump.

6-5. PUMP CONTROLS AND INSTRUMENTATION.

a. Mode of operation. Wastewater pumps will be designed to operate in one of the following modes: (1) constant speed, (2) adjustable speed, or (3) variable speed. The type of speed control system will be selected accordingly. As indicated in paragraph 6-3a, the type of speed control required will influence the type of electric motor to be used.

(1) Constant speed. Constant speed drive is the simplest, most reliable, and most economical mode of operation, and will be suitable for the majority of wastewater pumping applications at military installations. However, where there is a need to match pumping rates with the incoming wastewater flowrates, a variable speed drive will usually be more appropriate.

(2) Adjustable speed. By changing pulley or sprocket ratios on a belt driven pump, the speeds can be adjusted to accommodate several constant speed pumping rates. This type of system will be used mainly in sludge pumping, but can be a good alternative to variable speed control in wastewater pumping when speed adjustment is not required too often. Where automatic operation is needed pulleys or sheaves can be positioned through the use of pneumatic, hydraulic or electric devices.

(3) Variable speed. Variable speed operation will usually be required at large pumping stations where the entire wastewater flow, or major portions thereof, must be pumped to the treatment facility, and where it is desired to match the incoming flowrates in order to maintain a smooth, continuous flow into the plant. Pumping stations will normally require more pumps under a constant speed system than one utilizing variable speeds. Also, the size of the wet well

can be reduced greatly when pumps operate on a continuous basis. Variable speed operation is less efficient than constant speed when pumping at reduced rates, however friction losses and thus power costs are generally less for the smaller flows.

b. Speed control systems. The selection and design of the speed control system will be coordinated closely with the selection of the pump and drive units. The simplest system which allows pumps to accomplish the required hydraulic effects will be chosen for design. Factors to be considered in selecting a system include cost, efficiency, reliability, structural requirements, ease of operation and degree of maintenance necessary. The last two items are critical at military installations where adequate personnel cannot always be provided. Pumping stations will normally be designed for automatic on/off operation of the pumping units, with manual override by push-button or selector switch.

(1) Constant and adjustable speed. Most automatic constant speed and adjustable speed systems will operate from level signals. Pumps are turned on as the liquid level in the wet well rises, and are turned off when it falls. Pumping systems utilized in treatment plant processes are sometimes controlled by flow or pressure sensors. Level detection systems in standard use include the following:

(a) Float switches. The simplest type of switch consists of a float attached to a rod or tape, and suspended in the wet well. The float rod opens or closes a switch, depending on the rise or fall of the float riding on the liquid level. The float may also be suspended in a tube or cage. These units usually require frequent maintenance as grease, scum and debris in the wastewater build up on the equipment. Another type of float control incorporates a mercury switch encapsulated in a corrosion resistant ball, and suspended by cable in the wet well. This unit is not dependent upon the smooth, vertical movement of a rod, and thus is not subject to the maintenance problems described above.

(b) Bubbler tube. One of the most commonly used systems employs a bubbler tube which is suspended in the wet well and is fed by compressed air. The back pressure on the open end of the tube is sensed by pressure switches, and then transduced to a voltage or current signal. These signals are transmitted to a controller which operates the pumps. This system has no moving parts in contact with the wastewater, and requires very little maintenance. The constant flow of compressed air keeps the tube free of solids accumulations.

(c) Electrodes. A series of electrodes are mounted at different elevations so that when the liquid level rises and contacts an electrode, an electric circuit is energized. Electrodes are used primarily in pneumatic ejectors where the compressed air serves to keep the electrodes clean. They will not normally be used in wet wells due to frequent fouling by grease and waste debris.

(d) Sonic meters. A sonic meter measures the distance from the liquid level to the meter. They are difficult to install free of obstructions, and must be isolated from stray electrical or acoustic signals.

(e) Capacitances tubes and pressure diaphragm sensors. These types of controls will not normally be used due to fouling by the wastes.

(2) Variable speed. A bubbler system will in most cases be employed to control the operation of automatic variable speed pumps. In these systems, the back pressure from the bubbler tube is transduced to a pneumatic speed equipment to cover service conditions, or

where pump speed adjustments may be required, but variable speed operation or electronic signal for use in on/off and variable speed control of the pumps. On/off controls are usually provided by pressure or electronic switches. Variable speed control devices consist of (1) magnetic (eddy current) clutches, (2) liquid clutches, (3) variable voltage controls, (4) variable frequency controls, and (5) wound-rotor motor controls. Magnetic and liquid clutches have been available for many years as controllers for variable speed pumps. These older methods are inefficient in that the slip losses which developed are lost as heat. The recent development of solid state electronics has led to the introduction of newer methods of variable speed control suitable for both squirrel-cage and wound-rotor induction motors. The variable voltage and variable frequency controls are suitable for use with squirrel-cage rotors. Variable frequency drives are possible in efficiencies up to 95 percent, and are available in sizes up to 250 hp. However, variable voltage units are inefficient and are not recommended. Wound-rotor motor controls come in five categories, (l) fixed step resistors, (2) liquid rheostats, (3) reactance/ resistance controllers, (4) electronic rheostats, and (5) regenerative secondary controls. Of these, the regenerative secondary control offers the best efficiency, while the other units are considerably less efficient and require more maintenance. In general, variable speed control devices are more expensive, less efficient, and require a higher degree of maintenance than constant speed controls.

CHAPTER 7

PUMPING SYSTEM DESIGN

7-1. FORCE MAIN HYDRAULICS.

a. General. The pipeline which receives waste-water from a pumping station, and conveys it to the point of discharge, is called a force main. Force mains will be designed as pressure pipe, and must be adequate in strength to withstand an internal operating pressure equal to the pump discharge head, plus an allowance for transient pressures caused by water hammer. The internal operating pressure is maximum at the pumping station, and is reduced by friction to atmospheric, or near atmospheric, at the point of force main discharge. The primary consideration in the hydraulic design of force mains is to select a pipe size which will provide the required minimum velocities without creating excessive energy losses due to pipe friction. The most economical size of force main should be determined on the basis of power costs required for pumping, and capital investment costs of piping and equipment. In practice however, the size is usually governed by the need to maintain minimum velocities at low flows to prevent deposition of solids, and to develop sufficient velocity at least once a day to resuspend any solids which may have settled in the line. However, regardless of pipe sizes required for minimum velocities, the minimum diameters to be used are 32-millimeter (1-1/4-inch) for pressure sewers at grinder pump installations, 100-millimeter (4-inch) for force mains serving small pump stations and pneumatic ejectors, and 150-millimeter (6-inch) for all other force mains.

b. Design formula and chart. Force mains will be designed hydraulically with the use of the Hazen-Williams formula as follows:

$$V = K\,C\,R^{0.63}\,S^{0.54}$$

where:

K = 0.85 for SI units (1.32 for IP units)
V = velocity in meters per second (feet per second)
C = coefficient of pipe roughness
R = hydraulic radius in meters (feet)
S = slope of energy grade line in meters per meter (feet per foot)

(1) Roughness coefficient. Values of C to be used in the formula range from 100 for older force mains which have been in service a number of years (usually over 10), to 140 for force mains which are newly constructed. Some manufacturers of plastic and asbestos-cement pipe report C values as high as 150. However, due to uncertainties in design and construction, plus a desire to provide a margin of safety, C values greater than 140 will not normally be permitted. At some installations, force mains may be very old (40 to 50 years) and in extremely bad condition, with offset joints, broken pipe, or materials encrusted on pipe walls. For these cases, lower C values may be justified. However, values lower than 80 will not be allowed unless verified by flow and pressure tests.

(2) Velocity. Velocity criteria for force mains are based on the fact that suspended organic solids do not settle out at a velocity of 0.6 meter per second (2.0 feet per second) or greater. Solids will settle at velocities less than 0.3 m/s (1.0 fps) and when wastewater pumps are idle. However, a velocity of 0.75 to 1.00 m/s (2.5 to 3.5 fps) is generally adequate to resuspend and

flush the solids from the line. Force mains serving small pump stations, which are designed to operate on an intermittent basis, will be sized to provide a minimum velocity of 1 m/s (3.5 fps) at the peak discharge rate. For small stations having flows too low to warrant a minimum velocity of 1 m/s (3.5 fps) with one pump operating, the design may call for both pumps to be operated manually once a week for a sufficient period of time to flush out the line. Larger stations having three or more pumping units, which operate a major portion of the time, will require minimum force main velocities ranging from 0.6 m/s (2.0 fps) with one pump operating, to 1.5 m/s (5.0 fps) with several pumps operating. In these cases, it is only required that a minimum velocity of 0.75 to 1.00 m/s (2.5 to 3.5 fps) be provided once or twice daily. Large pumping stations which serve the entire installation or major portions thereof, and which are designed to pump continuously, will usually have a greater number of pumps operating over a wider range of flowrates. Since the pumping range may vary from 7 or 8 to 1, it will generally be sufficient to design for velocities of 0.15 up to 2.00 or 2.50 m/s (0.5 up to 7.0 or 8.0 fps). Maximum velocity is set at 3 m/s (10.0 fps).

(3) Slope. The value of S in the formula is equivalent to the kinetic energy loss due to pipe friction divided by the length of conduit, or $S = H_f/L$. Minor energy losses from fittings and valves will be converted to equivalent lengths of conduit for use in the formula. Conversion tables for fittings and valves can be found in standard hydraulics textbooks. The total kinetic energy loss in a force main will be computed by multiplying the slope of the energy grade line by the total length of conduit including equivalent lengths, or $H_f = S \times L$.

7-2. PUMP ANALYSIS AND SELECTION.

a. Total dynamic head. The head in feet against which a pump must work when wastewater is being discharged is termed the total dynamic head (TDH). The two primary components of TDH in wastewater applications are the static discharge head and the kinetic losses due to pipe friction. Velocity and pressure heads are also present, but are usually insignificant. The TDH will be calculated with the use of the Bernoulli energy equation which can be written as follows:

$$TDH = (P_d/W + V^2_d/2g + Z_d) - (P_s/W + V^2_s/2g + Z_s) + H_f$$

where

P_d, P_s	=	gage pressures in kiloPascals (pounds per square foot)
V_d, V_s	=	velocities in meters per second (feet per second)
Z_d, Z_s	=	static elevations in meters (feet)
H_f	=	kinetic energy loss in meters (feet)from pipe friction, fittings, and valves, as calculated in paragraph 7-1b(3)
w	=	specific weight of fluid in kilonewtons per cubic meter (pounds per cubic foot)
g	=	acceleration due to gravity, 9.80 m/$^{sec.}$ (32.2 ft/$^{sec.}$)

All head terms are in meters (feet). Subscripts $_d$ and $_s$ represent force main discharge and pump suction, respectively. In order to determine hydraulic conditions at the pump suction, it will be necessary to write an energy equation from the liquid level in the wet well to the pump suction nozzle.

b. System head-capacity curve. To determine the head required of a pump, or group of pumps that would discharge at various flowrates into a force main system, a head-capacity curve must be prepared. This curve is a graphic representation of the total dynamic head, and will be

constructed by plotting the TDH over a range of flowrates from zero to the maximum expected value. Friction losses can be expected to increase with time, thus affecting the capacity for the pumping units and their operation. Therefore, system curves well reflect the maximum and minimum friction losses to be expected during the lifetime of pumping units, as well as high and low wet levels. The typical set of system curves will generally consist of two curves using a Hazen-Williams coefficient of C = 100 (one for maximum and one for minimum static head), and two curves using a Hazen-Williams coefficient of C = 140 (for maximum and minimum static head). These coefficients represent the extremes normally found in wastewater applications.

c. Pump head-capacity curve. The head that a particular pump can produce at various flowrates is established in pump tests conducted by the pump manufacturer. The results of these tests are plotted on a graph to form the pump characteristic curve. Along with the discharge head developed, the pumps operating efficiency, required power input, and net positive suction head are generally included on the same diagram. Additional information on pump curves and pump design is available in TM 5-813-9. Software is also commercially available for personal computers to aid in the design of pumping systems and the selection of pumps.

(1) Efficiency and power input. Pump efficiency is the ratio of the useful power output to the power input, and is given by:

$$E = \frac{wQ\,TDH}{P\,K}$$

where:

E = pump efficiency (100 E = percent)
w = specific weight of fluid in kilonewtons per cubic meter (pounds per cubic foot)
Q = pump capacity in cubic meters per second (cubic feet per second)
TDH = Total dynamic head in meters (feet)
P = power in kilowatts (brake horsepower)
K = constant, 1 for SI units (550 for IP units)

Pump efficiencies usually range from 60 to 85 percent. Most characteristic curves will indicate a best efficiency point (BEP) at which pump operation is most efficient. Where possible, pumps will be selected to operate within a range of 60 to 120 percent of the BEP.

(2) Net positive suction head. When pumps operate at high speeds and at capacities greater than the BEP, the potential exists for pump cavitation. Cavitation can reduce pumping capacity and may in time damage the pump impeller. Cavitation occurs when the absolute pressure at the pump inlet drops below the vapor pressure of the fluid being pumped. To determine if cavitation will be a problem, the net positive suction head (NPSH) available will be computed, and compared with the NPSH required by the pump. The NPSH is not normally a problem when discharge heads are less than 18 meters (60 feet). However, when heads are greater than 18 meters (60 feet), or when the pump operates under a suction lift, or far out on its curve, the NPSH will be checked. The NPSH available at the eye of the impeller in meters (feet) will be calculated with the following formula:

$$NPSH_A = H_s + P_a/w - P_v/w$$

where:

H_s = total energy head in meters (feet)at the pump suction nozzle
= $P_s/w + V^2_s/2g + Z_s$
Pa = atmospheric pressure in KiloPascals (pounds per square foot) absolute, and
Pv = vapor pressure of fluid being pumped in KiloPascals (pounds per square foot) absolute.

(3) Affinity laws. A set of relationships derived from flow, head and power coefficients for centrifugal pumps, can be used to determine the effect of speed changes on a particular pump. These relationships are known as affinity laws and are as follows:

$$Q_1/Q_2 = N_1/N_2$$

$$H_1/H_2 = N^2_1/N^2_2$$

$$P_1/P_2 = N^3_1/N^3_2$$

where:

N_1, N_2 = pump speeds in revolutions per minute (rpm).

Q, H, and P terms represent pump capacity, discharge head, and power output respectively, at speeds N_1 and N_2. These relationships will be used in analyzing variable speed pump operation in the absence of manufacturer's characteristic curves, or where characteristic curves do not show performance at the desired speeds.

d. Pump selection. System analysis for a pumping station will be conducted to select the most suitable pumping units which will meet service requirements, and to determine their operating points, efficiencies, and required power.

(1) Single pump operation. A system head-capacity curve will be prepared showing all conditions under which the pump is required to operate. The system curve will then be superimposed onto a pump head-capacity curve, or characteristic curve, to define the pump operating point. The point where the two curves intersect represents the head and capacity at which the pump will operate in the given piping system.

(2) Multiple pump operation. Where two or more pumps discharge into a common header, the head losses in individual suction and discharge lines will be omitted from the system head-capacity curve. This is because the pumping capacity of each unit will vary depending upon which units are in operation. In order to obtain a true picture of the output from a multiple pump installation, the individual suction and discharge losses are deducted from the pump characteristic curves. This provides a modified curve which represents pump performance at the point of connection to the discharge header. Multiple pump performance will be determined by adding the capacity for points of equal head from the modified curve. The intersections of the modified individual and combined pump curves with the system curves give the total discharge capacity for each of the several possible combinations. Pumps will be selected so that the total required capacity of the pump installation can be delivered with the minimum level in the wet well and maximum friction in the discharge line. Pump efficiency will be a maximum at average operating conditions.

7-3. PUMP CONTROLS.

a. General. Instrumentation at a pumping station includes automatic and manual controls used to sequence the operation of pumps, and alarms for indicating malfunctions in the pumping system. Automatic control of pumps will usually be based on the liquid level in the wet well. Paragraph 6-4 contains a discussion of the various modes of pump operation, pump control systems, and a description of level detection devices. Manual control of pumps is always required in order to operate the pumps during emergencies, for maintenance purposes, or when automatic systems fail. Manual override will be set to bypass the low level cut-off, but not the low level alarm.

b. Selection of control points. A control range of at least 1 meter (3.0 feet) is required between maximum and minimum liquid levels in the wet well. A minimum of 150 millimeters (6 inches) will be required between pump control points used to start and stop successive pumps, or to change pump speeds. For small stations, the control range may be less, however control points will not be set closer than 75 millimeters (3 inches).

(1) Constant or adjustable speed pumps require simple on-off switches to start or stop pumps, or to change from one speed step to the next.

(2) Variable speed pumps require a more complex control arrangement. The two basic types of level control for variable speed operation are (a) variable level, and (b) constant level. For variable level control, a narrow band of control points is established in the wet well. Pump speed is then adjusted in steps by the level detection system (usually a bubbler tube) as the level varies. Pumps operate at maximum speeds near the HWL, and at minimum speeds near the LWL. However, pumps are started and stopped by level switches. Constant level control is seldom used, but may be required where a very narrow band of operation is necessary. In a constant level system, one level is set as the control point, and pump speed is adjusted in a step less fashion as the liquid level rises above, or falls below this point.

c. Alarms. Alarms will be provided to signal high and low liquid levels in the well, pump failure, or a malfunctioning speed control system. The high level alarm will be set above the start point of the last pump in the operational sequence, but below the start point of the standby pump, if used. The low level alarm will be set below the shutoff point of the lead pump. An emergency, low level pump cutoff will be set below the low level alarm.

7-4. PUMP SCHEDULING AND OPERATIONS. Reliability of a pump station is a critical part of design and operation. The number of pumps depends on present and future needs. An economic analysis should be performed to determine the number of pumps to be installed. In smaller stations a single pump may be most economical to meet the peak demand. However whenever a single pump is sufficient, two equal size pumps, each able to handle the peak demand, must be provided and set-up to alternate. Whenever two or more pumps are cost-effective to meet the peak demand, additional pump capacity or pumps must be installed so that peak demand can be met with the largest pump out of service. All pumps should alternate.

7-5. WET WELL DESIGN.

a. General. Wet wells will be constructed at pumping stations for the purpose of storing wastewater flows prior to pump operation. The storage volume required depends upon the method of pump operation, i.e., whether pumps are constant, adjustable or variable speed. In addition to providing adequate storage volume, wet wells will be designed to (1) allow for proper pump and level controls, (2) maintain sufficient submergence of the pump suction inlet, (3)

prevent excessive deposition of solids, and (4) provide ventilation of incoming sewer gases. In smaller stations, bar racks or comminuting devices may be installed within the wet well in order to reduce costs. Overflows from wet wells are prohibited in all cases.

b. Storage volume. If pumps are of constant or adjustable speed type, the wet well volume must be large enough to prevent short cycling of pump motors. For pumps driven by variable speed drives, the storage volume may be small provided pumping rates closely match the incoming flowrates. The volume required for the wet well will be computed with the following formula:

$$V = tq/4$$

where:

V = required volume in liters (gallons) between start and stop elevations for a single pump, or a single speed step increase for adjustable or variable speed operation

t = minimum time in seconds (minutes) of one pumping cycle (time between successive pump starts), or time required for a speed or capacity change, and

q = pumping capacity, or increment in capacity where one or more pumps are operating and an additional pump is started, or where pump speed is increased, in liters per second (gallons per minute).

Constant or adjustable speed pumps driven by squirrel-cage induction motors will be designed for minimum cycle times as shown in the following table.

Table 7-1. Minimum Pump Cycle Times

Motor size, kW (bhp)	*	t, minutes
Less than 15 (20)	*	10 to 15
15 to 75 (20 to 100)	*	15 to 20
75 to 185 (100 to 250)	*	20 to 30
Over 185 (250)	*	as recommended by
	*	manufacturer

The storage volume calculated for small stations (capacities less than 45 L/s (700 gpm)) which utilize two identical constant speed pumps, may be reduced one half by providing a control circuit to automatically alternate the pumps. The storage volume required for variable speed pumps will be based on providing sufficient time for a change in capacity when a pump is started or stopped. When a pump is started the motor must be ramped to the desired speed, and the pumps already in operation must be reduced in speed. The time required for this is usually less than 1 minute. A considerable amount of storage is normally available in large sewers which serve stations utilizing variable speed pumps. This volume may be considered in design by calculating backwater curves for the various operating levels. The maximum retention time in the wet well will not exceed 30 minutes to prevent septic conditions.

c. Suction pipe connections. Pump suction piping will be selected to provide a velocity of 1.2 to 1.8 meters (4 to 6 feet) per second. Pipe should be one or two sizes larger than the pump suction nozzle. Vertical pumps installed in a dry well which is adjacent to the wet well, will be fitted with a 90 degree suction elbow, followed by an eccentric reducer and a gate valve. The suction line will be extended through the wall into the wet well, and terminated with either a 90 or 45 degree flared elbow, or an elbow with a flared fitting. The most commonly used piping arrangements are illustrated in figure 7-1, where D is the diameter of the flared inlet, and S is the submergence depth. Adequate submergence of the suction inlet is critical to prevent air from being drawn in by vortexing. Minimum required submergence depths are given in table 7-2 as a function of velocity. The net positive suction head (NPSH) will also be considered when determining S. See paragraph 7-2c (2).

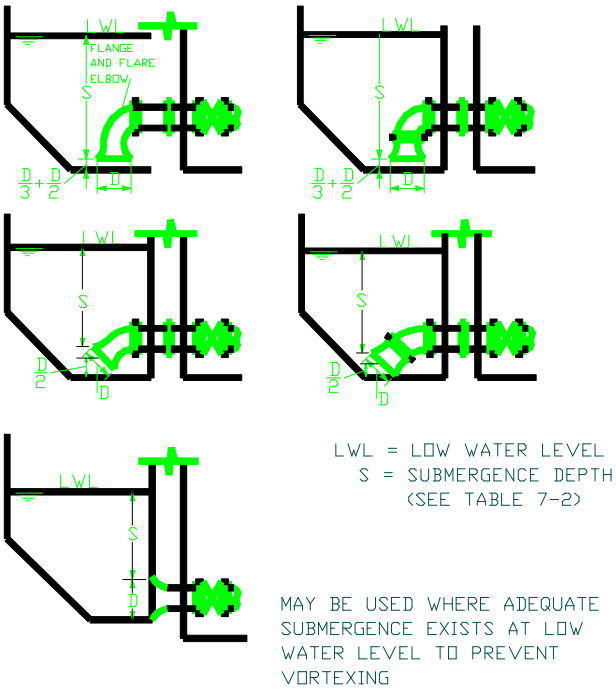

SOURCE: WASTEWATER ENGINEERING: COLLECTION AND PUMPING OF WASTEWATER BY METCALF & EDDY, INC., 1981, p. 360.

Figure 7-1. Pump Suction Connections to Wet Well.

Table 7-2. Required Submergence Depth to Prevent Vortexing.

Velocity at diameter D, m/s (fps)	* S, meters (feet)
0.6 (2)	* 0.30 (1.0)
1.2 (4)	* 0.79 (2.6)
1.5 (5)	* 1.04 (3.4)
1.8 (6)	* 1.37 (4.5)
2.1 (7)	* 1.74 (5.7)
2.4 (8)	* 2.16 (7.1)

Larger, conventional type pump stations will normally be constructed with wet wells divided into two or more sections, or compartments, so that a portion of the station can be taken out of service for inspection or maintenance. Each compartment will have individual suction pipes, and will be interconnected with slide or sluice gates. The floor of the wet well will be level from the wall to a point 300 to 450 millimeters (12 to 18 inches) beyond the outer edge of the suction bell, and then will be sloped upward at a minimum 1:1 slope.

7-6. CAVITATION.

a. Cavitation is a term used to describe a phenomenon that may occur in a pumping installation and may occur in piping systems because of liquid velocity changes. Cavitation in centrifugal pumps is explained in TM 5-813-5/AFM 88-10, Vol. 7. Cavitation in pipe lines may take place at sudden enlargements of the pipe cross section, at sharp bends, or similar situations. The designer should avoid the following conditions for centrifugal pumps:

(1) Operating heads much lower than rated head at peak efficiency of the pump.

(2) Operating capacities much higher than rated capacity at peak efficiency of the pump.

(3) Suction lift higher or positive suction head lower than recommended by the manufacturer.

(4) Liquid temperatures higher than that for which the system was originally designed.

(5) Pump speeds higher than manufacturer's recommendations.

b. For propeller pumps, the designer should avoid these conditions except conditions (1) and (2) will be stated as follows:

(1) Operating heads much higher than the peak efficiency of the pump.

(2) Operating capacities much lower than capacity at peak efficiency of the pump. Cavitation will not be a problem in a pump installation if the system is designed, selected, installed, and operated in accordance with the recommendations of the designer and the manufacturer.

7-7. SURGE ANALYSIS AND CONTROL.

a. Water hammer. Sudden changes in flow and velocity in force mains can occur as a result of pump startup, pump shutdown, power failure, or rapid closing of a valve. These velocity changes can produce large pressure increases or surge phenomena known as water hammer. The most severe water hammer conditions are usually caused by a pump shutdown or power failure. An analysis of water hammer will include calculating the critical time, determining the maximum pressure increase, and selecting a method of control.

b. Critical time. When flow is suddenly changed in a force main, a pressure wave is generated which rapidly travels the entire length of conduit, and back to the point of change. The time required for this round trip is given by:

$$T_c = 2L/a$$

where:

T_c = critical time in seconds
L = length of force main between point of flow change and point of discharge
a = velocity of pressure wave.

When flow is completely stopped (Q = O) in a time interval greater than T_c, the maximum theoretical pressure increase is not fully developed. However, when flow is stopped in a time interval less than or equal to T_c, the change is said to be instantaneous, and the maximum pressure increase is develop as
given below.

c. Maximum pressure increase. The maximum theoretical pressure increase or surge caused by water hammer is calculated from the following:

$$h_w = aV/g$$

where:

hw = pressure increase in meters (feet)
V = velocity of fluid in the pipeline prior to flow change in meters (feet) per second
g = acceleration due to gravity, or 9.80 m/$^{sec.}$ (32.2 ft/$^{sec.}$) at sea level
a = velocity of pressure wave in meters (feet) per second

Some typical values of a are given in table 7-3 below.

Table 7-3. Water Hammer Wave Velocities.

Pipe Material	*	a, m/sec (ft/sec)
Asbestos-cement	*	820-1040 (2700-3400)
Ductile iron	*	940-1280 (3100-4200)
Steel	*	820-1190 (2700-3900)
Concrete	*	1010-1160 (3300-3800)
Plastic	*	340-460 (1100-1500)
Fiberglass	*	370-490 (1200-1600)

d. Methods of control. Whenever a pump is shut down, or power to the station fails, the pump motor is suddenly cut off. Pump speed along with flow and velocity in the force main are quickly decelerated by pressure waves, which travel up the pipeline and back in accordance with Newton's second law of motion. When the velocity is reduced to zero, reverse flow through the pump would occur if a gravity operated check valve or an automatic control valve were not

installed on the pump discharge line, and did not close properly. Reverse flow fully accelerated through the pump could cause transient flows and pressures well above maximum design conditions. A swing check valve which stuck open temporarily, and then slammed shut under these conditions, would result in a large pressure surge as given by paragraph c above. In order to control and limit these surge phenomena, the following practices will be followed.

(1) Gravity check valves. For simple cases involving small to medium sized pump stations with gradually rising force mains (no intermediate high points) of less than 300 meters (1000 feet) in length, and with static discharge heads of less than 15 meters (50 feet), a gravity operated check valve will usually be sufficient. Gravity type check valves may be either swing checks utilizing outside lever and weight (or spring) set to assist closure, or then may be ball checks. Swing check valves are usually installed horizontally, while ball check valves may be either vertical or horizontal. For additional protection, a pressure relief valve may be installed in conjunction with check valves to allow reversing flow to reenter the wet wall. Pressure relief valves must be specially designed for sewage applications. As an alternative to relief valves, a hydro pneumatic tank may be utilized.

(2) Automatic control valves. In situations where long force mains are required, pipe profiles must conform to existing ground elevations for economic reasons. This normally will result in high points in the force main, with the possibility of water column separation at the high points during pump shutdown or power failure. The pressures generated when these separated columns come to rest against closed valves or against stagnant columns may be large, and are again determined by paragraph c above. In general, where force mains are greater than 300 meters (1000 feet) in length or contain intermediate high points, and where pumping stations are large in capacity, or static discharge heads are greater than 15 meters (50 feet), control valves will be automatically operated (1) cone, (2) plug, (3) ball, or (4) butterfly valves. Normal operation of these valves upon pump shutdown, is to slowly close the valve while the pump continues to run. When the valve is closed, a limit switch then stops the pump motor. On power failure, an emergency hydraulic or other type operator closes the valve slowly. The time of valve closure is of utmost importance. Valves should be half closed when the velocity in the force main has dropped to zero. The time required to reach zero velocity can be calculated with the following formula:

$$t = LV/gH_{av}$$

where:

t = time in seconds
L = length of force main in meters (feet)
V = velocity of fluid in pipeline in meters (feet) per second
g = acceleration due to gravity 9.80 m/sec^2 (32.2 ft/sec^2),and
H_{av} = average decelerating head including pipe friction in meters (feet).

The types of valve operators most often utilized are hydraulic, electric and pneumatic. Valves and operators specified for use will be fully adjustable for closure times ranging from t to 4t minimum. In some large pumping stations, the use of automatically controlled valves alone will not be sufficient. Extremely long force mains (over 1.6 kilometers (1 mile)) may require very long valve closing times, and thus result in excessive backflow to the wet well and reverse rotation of the pump and motor. To solve these problems, a pump bypass with surge relief valve will generally be required. Valves used for surge relief will be automatically controlled cone or butterfly valves, similar to the pump discharge valves. Normal operation upon pump shutdown

now will require the pump discharge valve to be fully closed when the velocity has dropped to zero. The surge relief valve will be fully open allowing backflow to enter the wet well at a reduced rate. As before, the relief valve must close slowly to avoid water hammer. Most cases involving large pump stations with long force mains, which contain several intermediate high points, will be too complex to solve by hand using conventional methods such as graphical solutions, arithmetic integration, or water hammer charts. Many computer programs are now available for water hammer analysis, and are recommended for use in those instances.

7-8. SCREENING AND COMMINUTING DEVICES. Centrifugal pumps are susceptible to clogging by rags, trash, and other debris normally found in wastewater. To protect pumps from clogging, equipment will be installed to screen or cut up these materials prior to pumping. Small pump stations with capacities of less than 13 L/s (200 gpm), including grinder pumps and pneumatic ejectors, are exempt from this requirement. The types of equipment to be used include bar racks, screens, and comminutors which are installed in the wet well, or in a separate influent channel. The design of these facilities is covered in TM 5-814-3/AFM 88-11, Vol. 3. At most medium to large sized pump stations, the use of mechanically cleaned bar screens or comminutors will be required. However, at smaller stations in remote areas, manually cleaned racks may be more feasible. The smallest clear opening between bars is normally 25 millimeter (1 inch), and spacings of less than 20 millimeters (3/4 inch) will not be permitted. All electrically operated equipment in wet wells will have explosion proof motors.

CHAPTER 8

PIPING

8-1. PIPE MATERIALS, FITTINGS, AND JOINTS.

a. General.

(1) Factors to be considered in the selection of pipe materials and piping systems for sewers or force mains are:

-Flow characteristics or friction coefficient.

-Life expectancy and history of use.

-Resistance to scour and abrasion.

-Resistance to acids, alkalis, high temperature, or corrosive wastes, and corrosive soils.

-Ease of handling and installation.

-Physical strength and pressure ratings.

-Joint water tightness and ease of installation.

-Availability of pipe in required sizes, strengths. etc.

-Availability of fittings, connections, and adapters.

Pump suction and discharge piping inside the station will normally be ductile iron or steel. However, other pipe materials covered in this paragraph are not precluded from use. Pipe, fittings, and joints serving as force mains will be selected to withstand the maximum internal operating pressures, including transient surges. The project specifications will indicate the appropriate pressure class and rating for each pipe application. No pipe manufactured is suitable for all installation requirements and conditions. The pipe materials covered in this paragraph are the ones most often used for sewers and force mains carrying sanitary and industrial wastes. Each type of pipe will be evaluated to determine its suitability for the particular design. Pipe materials found inappropriate for use will be deleted from the project specifications. Asbestos-cement pipe shall not be installed.

(2) Where iron or concrete pipe are to be considered, special attention will be paid to subsurface and soil conditions. The characteristics of the soil in which a pipe is placed affect the rates of corrosion, with the most corrosive soils being those having poor aeration and high values of acidity, electrical conductivity, dissolved salts, and moisture content. The relative potential for corrosion is best estimated by evaluating the degree of corrosion of existing metallic or concrete pipelines previously buried in the soil. Facility engineer personnel will normally have knowledge of these matters. When this information is not available, or is nonconclusive, resistivity tests of the soil will be conducted at several locations within the system and compared to data from pipe manufacturers. Typically soil with a resistivity above 30,000 ohm-cm is not likely to cause corrosion in steel pipe. More information on controlling corrosion can be found in TM 5-811-7 and the National Association of Corrosion Engineers Standard PR0169, Control of External Corrosion on Underground or Submerged Metallic Piping Systems.

(3) In areas where problems with root penetration are anticipated (local experience is a good guide), pipe which has the kind of joint which will successfully resist root penetration shall be specified. Generally speaking, the more water tight the joint, the greater will be the resistance to root penetration. Rubber-gasketed and compression-type joints are considered to provide the tightest joints. Also it is best to use pipe which comes in long lengths.

b. Ductile iron. Ductile iron (D.I.) pipe is suitable for sewers and force mains used at pumping stations and wastewater treatment facilities. Special uses include river crossings, pipe located in unstable soil, highway and rail crossings, and pipinginstalled above ground. D.I. pipe is susceptible to corrosionfrom acid wastes and aggressive soils. Cement, polyurethane, bituminous, or polyethylene linings are usually providedfor interior protection. However cement is not adequate for highly aggressive acid atmospheres; in such environments, pure fused calcium aluminate with pure fused calcium aluminate aggregates is recommended in lieu of standard cement lining. (See Section 11-3, Cement Lining.) For extremely corrosive soils,polyethylene encasement in accordance with AWWA C105 is recommended for external protection. Cathodic protection can be provided but is generally not cost effective when compared to polyethylene encasement. Pipe is available in 80 mm (3-inch) through 1,350 mm (54-inch) diameters, in 5-1/2 or 6 meter (18 or 20-foot) lengths, and with mechanical, push-on, or flanged joints. Flanged joints are restricted to interior or above ground piping. Allowable trench and superimposed surface loads for D.I. pipe are computed and tabulated in ANSI A21.50. The ordinary range of loading can be met without special bedding materials and procedures.

c. Steel. Steel pipe may be used for force mains when lined with cement mortar, bituminous materials, or polyurethane to provide internal protection. A bituminous coating must be applied for externalprotection also. Lined and coated steel pipe is available indiameters 100 mm (4-inch) through 3,600 mm (144-inch). Galvanized steel pipe will only be used for small diameter force mains and pressure sewers from 32 mm (1-1/4-inch) to 100 mm (4-inch) in size. Joints for steel pipe less than 150 mm (6-inch) will be threaded. Pipe 150 mm (6-inch) in diameter and larger will have mechanical, push-on or flanged joints. Threaded and flanged joints will be used only for interior piping. Steel pipe will be installed in accordance with the manufacturer's recommendations, and Manual No. M11 - Steel Pipe Design and Installation published by the American Water Works Association (AWWA).

d. Cast iron. Cast iron soil (C.I.S.) pipe will normally be allowed only as an option for building connections. C.I.S. pipe is used primarily for building interior drainage, waste, and vent piping, as described in Chapter 1 of the Cast Iron Soil Pipe & Fittings Handbook published by the Cast Iron Soil Pipe Institute. C.I.S. pipe is resistant to internal and external corrosion when provided with a bituminous coating, and is not subject to abrasion from grit, sand, or gravel. Factory applied bituminous coatings need to be inspected after the pipe is installed and recoated as needed. C.I.S. pipe is available in 50 mm (2-inch) through 380 mm (15-inch) diameters, in 1.5 m (5-foot) and 3 m (10 foot) laying lengths, and is manufactured in service (SV) and extra heavy (XH) classifications. Pipe joints will be either compression type using rubber gaskets, or bell and spigot type caulked with lead and oakum. Structural design of C.I.S. pipe will be in accordance with the methods outlined in chapter 5 of the Cast Iron Soil Pipe & Fittings Handbook, with special emphasis given to external loadings and pipe strength.

e. Concrete. Concrete pressure pipe and sewer pipe is appropriate for applications requiring large diameter or high strengths. A disadvantage is the lack of corrosion resistance to acids, especially critical where hydrogen sulfide is generated in substantial quantities. However, special PVC or clay liner plates, coatings of coal-tar, coal-tar epoxy, vinyl, or epoxy mortar can be applied to the pipe for corrosion protection. Concrete pipe joints are either bell and spigot type using

o-ring gaskets, or tongue and groove type made with cement mortar or bituminousmastic. Design of concrete sewers will be in accordance with the Concrete Pipe Handbook by the American Concrete Pipe Association. The Concrete Pressure Pipe Manual, Manual No. M9 published by the American Water Works Association (AWWA) will be used for design of force mains.

(1) Type II A cement, as specified in ASTM C 150, is sufficient for most installations. Type I may be used in certain situations where less than 0.1 percent soluble sulfates ($S0_4$) occur in the soil, or the wastewater contains less than 150 mg/L sulfates. If the soil contains more than 0.2 percent water soluble sulfates, or the wastewater sulfate concentration exceeds 1000 mg/L, Type V cement will be required. Unlined concrete pipe is subject to scouring by wastewaters carrying grit and sand at high velocities.

(2) Non-reinforced concrete sewer pipe is generally available in diameters 100 mm (4-inch) through 750 mm (30-inch), and in minimum laying lengths of 1 m (3 feet). Pretensioned reinforced concrete pressure pipe is available in diameters 250 mm (10-inch) through 1,050 mm (42-inch), prestressed concrete pressure pipe in diameters 400 mm (16-inch) through 3,600 (144-inch), and reinforced concrete (R.C.) pressure pipe in diameters 600 mm (24-inch) through 3,600 mm (144-inch). Each type utilizes bell and spigot joints with rubber gaskets. Reinforced concrete pipe will be used where high external loadings are anticipated, and large diameters or tight joints are required. The advantages of R.C. sewer pipe include a wide range of diameters, 300 mm (12-inch) through 2,700 mm (108-inch), and laying lengths, 1.2 meters (4 feet) to 7.3 meters (24 feet), which are available.

f. Plastic. Characteristics which make plastic pipe highly desirable include high corrosion resistance, light weight, and low coefficient of friction. Disadvantages include the possibility of excessive pipe wall deflections when installed improperly or subjected to high temperature wastes, and chemical breakdown caused by prolonged exposure to sunlight. Manufacturer's recommendations will be used in design of plastic pipe systems (especially in checking deflection, backfilling and trench loads), in addition to the Handbook of PVC Pipe-Design and Construction published by the Uni-Bell PVC Pipe Association. Allowable pipe deflections will be indicated in the project specifications. The following types of plastic pipe are suitable for use:

- Polyvinyl chloride (PVC)
- Acrylinitrile butadiene-styrene (ABS)
- Polyethylene (PE)
- High density polyethylene (HDPE)

g. PVC. PVC pipe is suitable for gravity sewers or forcemains. It is chemically inert to most acidic and alkaline wastes, and is totally resistant to biological attack. Since it is a nonconductor, PVC pipe is immune to nearly all types of underground corrosion caused by galvanic or electrochemical reactions, in addition to aggressive soils. Durability, light weight, a high strength-to-weight ratio, long laying lengths, watertight joints and smooth interior surfaces are characteristics which make PVC pipe an attractive alternative for use in sewer systems. Disadvantages include possible chemical instability due to long-term exposure to sunlight, excessive pipe deflection under trench loadings when installed improperly or subjected to high temperature wastes, and brittleness when exposed to very cold temperatures. PVC pipe must be installed to provide continuous passive lateral soil support along the conduit, and the

completed installation must be tested for diameter deflection.

(1) PVC sewer pipe is available in diameters 100 mm (4-inch) through 1,200 mm (48-inch), and in laying lengths of 3 to 6 meters (10 to 20 feet). Pipe dimensions comply with the standard dimension ratio (SDR) system, which means that mechanical properties are constant without regard to pipe sizes. Joints are integral bell and spigot type, and utilize elastomeric gaskets.

(2) PVC pressure pipe is available in diameters 40 mm (1/2-inch) through 300 mm (12-inch), and with screw, push-on, or solvent weld joints.

(3) For added strength against deflection, profile wall pipe is available in sizes from 100 to 1,200 mm (4 to 48 inches). Profile wall gravity sewer pipe has smooth interior walls and is braced circumferentially or spirally with outside projections. When the projections are exposed, such as ribbed pipe, the pipe is referred to as open profile wall pipe and when covered with a continuous layer of PVC, the pipe is closed profile pipe. The bell and spigot joints use an elastomeric gasket for water tightness.

(4) PVC corrugated sewer pipe with a smooth interior is available is sizes from 100 to 900 mm (4 to 36 inches) and also provides additional strength against deflection.

(5) PVC composite sewer pipe is manufactured in sizes from 8 to 15 inches in diameter and can be used for gravity sewers or force mains. It consists of two layers or tubes of PVC integrally connected with bracing. The space between the layers is filled with portland cement of other inert filler to provide continuous support between the tubes. This construction allows it to resist deflection better than standard PVC pipe. Joints can be solvent cement or elastomeric gasket.

h. Acrylinitrile butadiene-styrene (ABS). ABS pipe is light in weight, and resists attack by acids, alkalies and biological growths. Manufacturers' design and installation manuals will be used for selecting pipe embedment, backfill and compaction requirements.

(1) ABS composite plastic pipe. ABS composite pipe consists of two concentric thermoplastic tubes integrally connected across the annulus by a truss--like bracing. The annular void space is filled with portland cement concrete, or other suitable material, to form a bond between the inner and outer tubes. It is termed a "semi-rigid" pipe because it resists deflection better than most other plastics. ABS composite pipe is available in diameters 200 mm (8-inch) to 380 mm (15-inch), and in one laying length of 3.8 meters (12.5 feet). All joints are the solvent cement type using joints or fittings which may be factory installed or furnished loose.

(2) ABS solid wall plastic pipe. ABS solid wall plastic pipe, commonly referred to as ABS sewer pipe, is manufactured from the same compounds as composite pipe, however the pipe wall is of one solid material. The pipe is available in diameters 80 mm (3-inch) through 300 mm (12-inch), and is used for nonpressure sewers. It does not match the stiffness of composite pipe. ABS sewer pipe is joined by either socket type molded fittings, which are solvent fused to the pipe, or by elastomeric gasket joints.

i. Polyethylene (PE). PE pipe is manufactured based on controlled outside diameters or inside diameters, depending on the types of connections needed. It can be used for pressure or gravity applications. Jointing using heat fusion shall be in accordance with ASTM D 2657 and with a manufacturer's certified field representative present. Corrugated PE pipe with a smooth

interior and fittings are also available for gravity sewers but has limited use due to its low impact strength.

j. High Density Polyethylene (HDPE). PE is divided into 3 classifications - low, medium, and high density. HDPE pipe is more widely used for pressure, gravity, and sliplining applications than the other PE pipes because it is more abrasion and impact resistant.

(1) Pressure pipe. Standard HDPE pipe, up to 600 mm (24-inch) in diameter is available and is generally used for pressure pipe.

(2) Large diameter profile wall sewer pipe. Profile wall HDPE pipe is manufactured for gravity sewers in diameters of 450 to 3,000 mm (18 to 120 inches). Joints can be heat fused or bell and spigot (with a gasket or thermal weld). Mechanical joints shall be used only where other methods are unfeasible.

k. Fiberglass. Fiberglass pipe provides a good alternative for use in large diameter force mains. High structural integrity, low pipe friction coefficient, and a high resistance to internal/external corrosion and to high temperature wastes, are important properties of fiberglass pipe. Design, trench and backfilling procedures, and installation of fiberglass pipes will follow the manufacturer's recommendations. Specifications shall require that a certified field representative of the manufacturer be present during installation and to inspect all joints. The following types of fiberglass pipe may be used:

(1) Reinforced thermosetting resin pipe (RTRP). RTRP pipe may be installed in diameters of 200 mm (8-inch) through 3,600 mm (144-inch). Jointing systems for RTRP pipe include bell and spigot, flanged, or special mechanical type couplings. Elastomeric gaskets are used to provide flexible joints.

(2) Reinforced plastic mortar pipe (RPMP). RPMP pipe is composed of a siliceous sand aggregate reinforced with glass fibers, and embedded in a thermosetting polyester resin. RPMP pipe is ideally suited for large diameter applications, and performs extremely well in resisting pipe wall deflection and internal/external corrosion. The unique fiberglass/resin construction provides optimum protection against attack from wide range of chemically aggressive environments including hydrogen sulfide and other sewer gases, most natural soils, salt and brackish water, and galvanic or electrolytic reactions. No special coatings or cathodic protection are required. Even though RPMP pipe is officially designated a flexible conduit, its structural integrity is such that for most installations, the trench preparation and backfill requirements are considerably less than with other flexible conduits, and even some rigid ones. Its other advantages include lightweight and a smooth, glass-like interior surface. RPMP sewer pipe is available in diameters 200 mm (8-inch) through 3,300 mm (144-inch), and in laying lengths of 3, 6, and 12 meters (10, 20 and 40 feet). Pipe joints are made with grooved couplings or bell and spigot joints utilizing rubber O-ring gaskets.

l. Vitrified clay (V.C.) pipe is manufactured from clay and shale products to form an ideal material for sewer use. V.C. pipe has a high resistance to corrosion from acids and alkalies, and resists scouring and erosion well. This provides a distinct advantage in serving as industrial waste sewers, or sanitary sewers subject to hydrogen sulfide generation. It should be noted that availability of some sizes and strength classifications is limited in certain geographical areas. V.C. pipe is also known for brittleness. Clay pipe is available in nominal diameters 200 mm (4-inch) through 1,000 mm (42-inch), and laying lengths of 300 mm to 3 meters (1 to 10 feet). Clay pipe is manufactured in Standard and Extra Strength classifications. The Clay Pipe

Engineering Manual provides engineering data to be used in designing clay pipe sewers.

m. Special materials. In designing sewer systems for military industrial installations, pipe and appurtenances made of materials which are subject to attack by acids, alkalies or high temperature, highly corrosive industrial type wastewaters, will not be included in the specifications. The designer will carefully evaluate the particular wastes involved, and will indicate in the specifications the types, concentrations, and temperatures of the various waste materials to be encountered. Conditions seldom exist at military installations requiring discharge of acids, or other type wastes, in such concentrations that vitrified clay pipe would not be suitable. However, there may be situations where extremely corrosive wastes preclude the use of V.C. or other pipe materials covered in this manual. For these occasions, special pipe materials, linings, or coatings will be selected using manufacturers recommendations, and any other applicable publications. Laboratory certification of pipe or material performance may be required in cases of unusual wastes.

n. Other Considerations. Solvent cement joints minimize the possibility of poor joint construction, and greatly reduce groundwater infiltration.

8-2. VALVES AND APPURTENANCES. The use of valves in wastewater pumping can be divided into the following categories:

a. Isolation or shutoff valves. Where the need to isolate pumps or part of the piping system occurs, manually operated shutoff valves will be used. Gate valves or butterfly valves generally serve as shutoff valves, however ball valves or plug valves may also be used. Shutoff valves are required on the suction and discharge sides of all pumps.

b. Surge control valves. To protect pumps and piping from surges caused by pump shutdown or power failure, gravity operated swing check or ball check valves, or automatically operated cone, plug, ball or butterfly valves will be installed in the pump discharge line. The operation of surge control valves is discussed in paragraph 7-7.

c. Blowoff valves. A valve outlet installed at the low point in a force main, and arranged to drain or flush the pipeline, is termed a blowoff. Normally, blowoffs will be required only on long depressed sections of force main, or where an accumulationof solids is likely to occur. Blowoff connections will be in-stalled in manholes or valve structures, and will be protectedagainst freezing. A means of discharging to a suitable locationmaterials flushed from the system will be provided. The pipesize of the outlet connection should coincide with the size of the force main.

d. Air valves. Air valves will be installed at high points in force mains for the purpose of admitting and releasing air. When the pipeline is taken out of service for draining, flushing and filling operations, a manually operated valve will be adequate. However, where air pockets or pressures less than atmospheric are likely to occur with the pipeline in service and under pressure, automatic air release and/or air vacuum valves will be used. Manual valves can also be used with the pipeline under pressure by leaving the valve partially open. Automatic valves are not recommended due to maintenance problems, and should be used only where absolutely required. Automatic valves will be of a type specially designed for sewage, and will be provided with backflushing connections. All valves will be installed in a manhole or valve structure with adequate drainage and protection against freezing.

8-3. INSTALLATION.

a. Thrust restraint. Force mains will be restrained to resist thrusts that develop at bends, tees, wye connections and plugs in the pipe. The magnitude of such forces can be calculated with the use of formulas found in standard hydraulics textbooks. Required methods of restraint will consist of mechanical joint restraints or concrete thrust blocks, and will be designed in accordance with Appendix C, TM 5-813-5.

b. Depth of cover. Force mains will be installed with sufficient depth to prevent freezing, and to protect the pipe from structural damage. A minimum cover depth of 1 meter (3 feet) will ordinarily be required for freeze protection. However, in unusually cold climates, a greater depth may be required.

c. Protection of water supplies. Force mains and sewers will not be installed closer than 3 meters (10 feet) horizontally to potable water lines. If conditions prevent a 3 meters (lO-foot) clearance, a minimum distance of 2 meters (6 feet) will be allowed provided the bottom of the water pipe is at least 300 mm (12 inches) above the top of the force main or sewer pipe. Where a force main must cross a potable water line, it will always be installed below the water line with a minimum vertical clearance of 600 mm (2 feet). Where water lines cross under a gravity sewer, the sewer pipe for a distance of at least 1 meter (3 feet) on each side of the sewer shall be fully encased in concrete or shall be made of pressure pipe. Pressure pipe joints will not be closer than 1 meter (3 feet) horizontally to the crossing unless fully encased in concrete.

d. Asbestos-cement pipe. Due to the dangers associated with cutting asbestos products, no asbestos-cement pipe shall be installed. Safe procedures for cutting existing asbestos-cement pipe are given in the Asbestos Cement Pipe Producers Association publication Recommended Work Practices for A/C Pipe.

CHAPTER 9

PUMP STATION COMPONENTS

9-1. GENERAL. Pumps, piping, and equipment must be protected from the weather as dictated by local climate conditions. In cold climates pumps and piping must be protected from freezing and are usually completely housed in structures. In warm climates portions of stations may be located in outside enclosures which must provide protection from moisture and other weather related conditions. The impact of noise on the surrounding area and the need for security fencing will be considered for all stations. Standard windows for unattended remote located stations may be deleted for security reasons, if other provisions such as skylights or high windows are made for natural lighting or if artificial lighting is provided to assist periodic maintenance. The equipment must be located so as not to be subject to flooding. The site will be graded to drain surface water away from structures and wet wells. Buildings will be designed in compliance with local codes and regulations. Building layouts must be designed logically considering the sequence of installation of initial and future equipment if future expansion is planned. The need for storage facilities for equipment parts and tools should be considered and provided as needed.

9-2. CONSTRUCTION REQUIREMENTS AND MATERIALS.

a. Station configuration. The space requirements of pumps,piping and equipment, along with the storage volume required inthe wet well, will be carefully determined so that the propersize, shape and configuration of the pumping station can beselected. The size and shape of the station will often bedictated by equipment other than pumps, such as bar screens, comminutors, grit collectors, etc. Rectangular or squarestructures normally have more usable interior space than circularones, and will be employed whenever possible in the design ofmedium to large sized pumping facilities. However, where thebelow ground portion of the station must be made deep toaccommodate incoming sewers, and where foundation conditions arepoor, circular caisson type structures will be required iflateral earth pressures are excessively high. Factory assembledor package type stations will generally be circular in design,and will be anchored to base slabs where warranted by subsurfaceconditions. Pump stations located in cold regions or in seismic zones will require special design considerations.

b. Designing for operation and maintenance. The design of medium to large sized, conventional type pumping facilities will include adequate floor openings, doorways, or access hatches for the installation, removal, and replacement of the largest items of equipment. Work place safety of operation and maintenance personnel and security of the facility will be considered in the overall design. Space will be provided for removing equipment for repair without interruption to other equipment. Consider the space required to remove bolts from thrust harnesses of sleeve couplings and to slide couplings off joints. Interior dimensions in the dry well or structure will provide a minimum clearance of 1.2 meters (4 feet) between adjacent pump casings, and a minimum of 1 meter (3 feet) from each outboard pump to the closest wall. Other major items of equipment will be provided similar spacing. A 2.1 meter (7-foot) minimum clearance between floor and overhead piping will be maintained where practicable. Smaller package type stations will be furnished with necessary access openings for removal of pumps and equipment, however interior dimensions and clearances will generally be less than for field erected stations. Small stations with above ground equipment can be enclosed with a removable cover. Wet wells for medium to large sized stations will be divided into two or more

compartments to facilitate cleaning and repairs. Wet wells for all stations will have no length, width or diameter smaller than 1.2 meters (4 feet). Eye bolts or trolley beams will be provided in smaller stations, and overhead bridge cranes in large stations, for hoisting and removing equipment from mountings. Stairs will be provided in medium to large sized stations so that personnel may inspect and maintain equipment. Smaller stations, except those utilizing submersible pumps, will require the use of vertical safety ladders. A suitable means will be provided to service and maintain all equipment. A floor drainage system will be provided in the dry well, and throughout the superstructure, for collection of wash down, seepage, and stuffing box leakage. These wastes will be piped or conveyed to the wet well, either by gravity or by sump pump. Openings to the wet well and dry well through the main floor of the station will be above the maximum flood level, or will otherwise be protected from flooding.

c. Materials of construction. Large to medium sized,conventional type stations will ordinarily be constructed ofreinforced concrete. The above ground portion of the building maybe of masonry, wood, or metal panel construction. Therequirements of Department of Defense (DOD) Construction CriteriaManual 4270.1-M will be followed in designing for fire resistivestructures. Small package type stations will generally bemanufactured of steel or fiberglass with separate wet wellsconstructed of precast concrete or fiberglass manhole sections. Where steel structures are used, cathodic protection, in conformance with TM 5-811-7, or appropriate corrosion control measures will be provided for the underground steel shell. Alternatively, steel structures may be protected by a concrete or gunite coating where proof can be furnished by the manufacturer of satisfactory design life. All structures will be designed to withstand flotation.

d. Personnel safety. Guards will be placed on and around all equipment where operators may come in contact with moving parts. Railings will be required around all floor openings, and along platforms or walkways, where there is a danger that personnel may fall. Floors, grating, and plates will be nonslip. Warning signs will be placed at all hazardous locations. Rubber mats will be provided in front of all electrical equipment where the potential exists for electrical shock. Adequate lighting and ventilation will be provided as required in following paragraphs. In attended stations where the possibility exists for toxic, explosive, or otherwise hazardous atmospheres, proper design for personnel safety will be in conformance with TM 5-814-3/AFM 88-11, Vol. 3. Design for fire protection will be in accordance with DOD Manual 4270.1-M. Wastewater pumping stations will be classified as light hazard, industrial type occupancies. Always provide a quick, unobstructed exit for people working around pumps.

9-3. STRUCTURAL SYSTEMS. The foundation design will be based upon a soils analysis and recommendations of a geotechnical engineer experienced in the field of soils mechanics and foundation design. Information on ground water conditions and the classification of soil types will be obtained through borings at the pump station location. For below grade structures the soils survey will be performed during the time of year when ground water is at its highest. Conditions to be considered in the design will be not only soil bearing qualities, but also soil swell potential and ground water infiltration into the structure through the lowest point of entry which bill be either pipe penetration of a joint in the concrete. Usually ground water should be at least one foot below the lowest point of entry. The structural design layout will show design of pipe anchors and pipe supports under pump operating conditions, and foundations under heavy equipment. Structural steel will be provided to support piping and conduit. Reinforced concrete bases raised above the floor will be provided for pumps, engine drives, large valves and control devices, and floor mounted electric equipment. Centrifugal pumps and driver will have common foundation and base plate. Refer to TM 5-805-4 for noise and vibration control for equipment installations. Floors will slope to floor drains located around all pumps. Floor loading will consider moving large equipment in and out for repair, maintenance, and replacement. Crane

rails and traveling overhead hoists will be provided in large pump station buildings where use of temporary or portable hoisting equipment is not practical for maintenance, repair, and equipment removal operations. Sufficient headroom must be provided to allow equipment being removed to clear other equipment. A removable hatch, hinged hatch, or removal roof panel may be considered for removal of vertical long stem equipment. Split floor levels will be avoided. Where different floor levels are necessary, standard stair design will be used and safety railing provided in accordance with OSHA standards.

9-4. MECHANICAL EQUIPMENT. Typical pump station layouts are shown in figures 9-1 and 9-2. Valves, meters, gauges, and controls shall be located to be accessible without use of ladders or chain wheels. Use the structure's walls to support heavy valves and piping. Locate seal water valving and appurtenances, such as solenoids and pressure-regulating valves, rotameters, and isolating valves, on a wall adjacent to the pump and supply the seal water to the pump in copper or stainless steel piping. Floor drains and pump gland drains will be provided in above ground stations. Sumps and sump pumps will be provided in dry wells. To avoid plugging of pipes and valves, pump discharges will not be connected to a manifold or header from underneath and check valves will not be located in a vertical position.

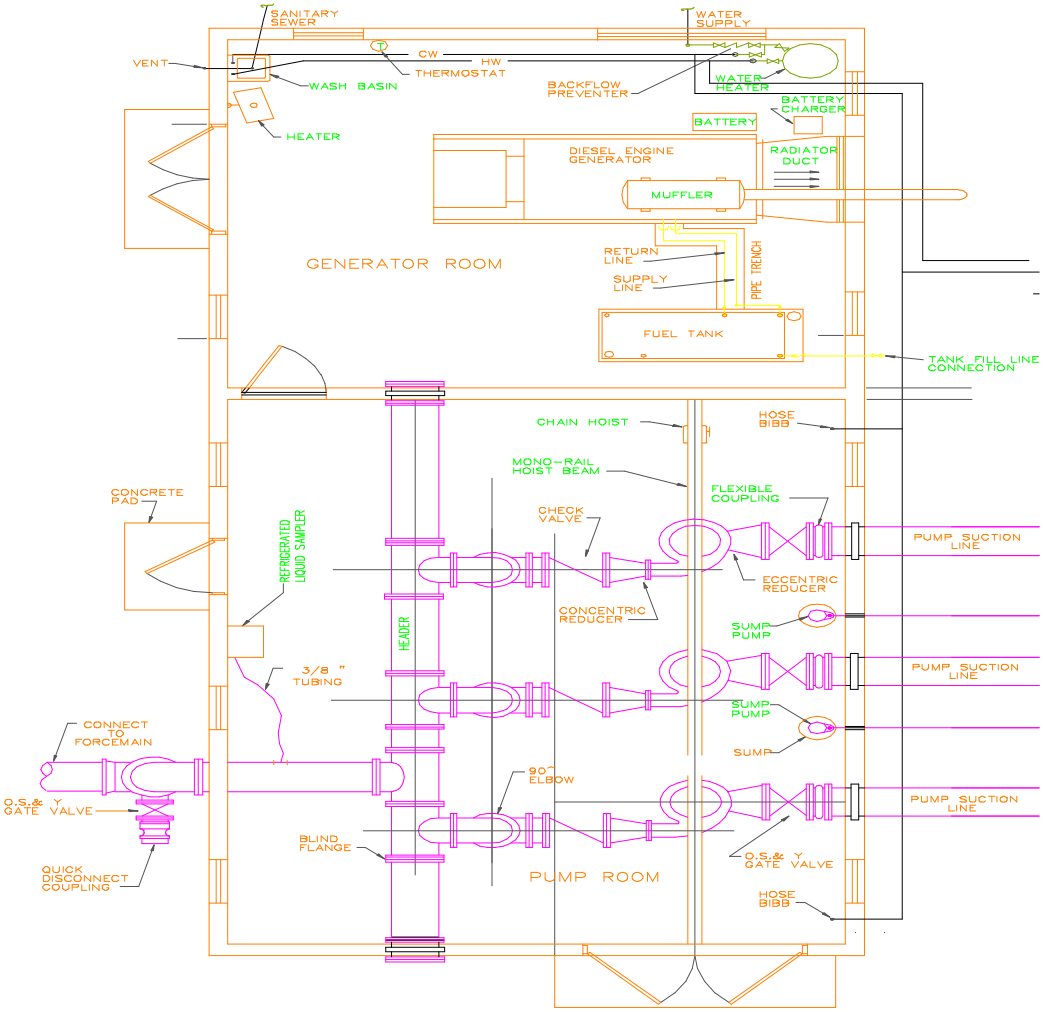

Figure 9-1. Pumping station typical layout

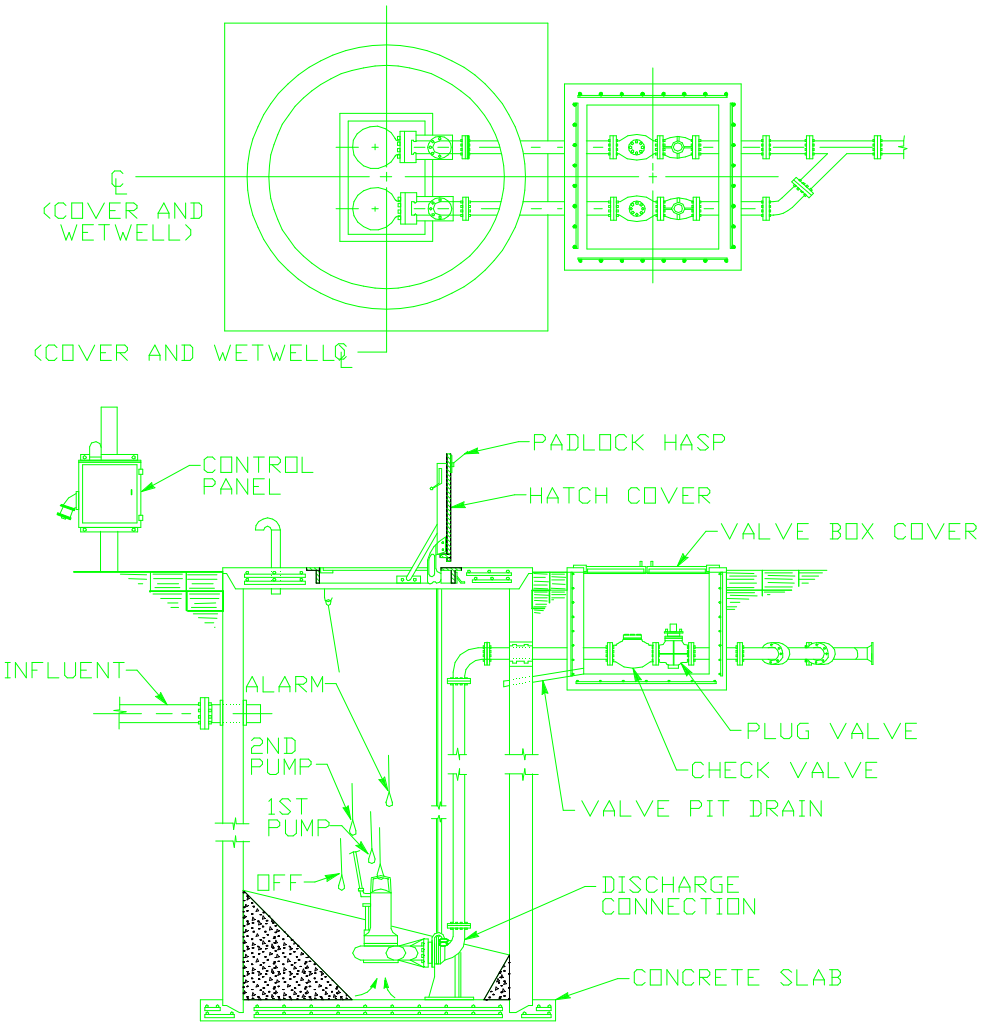

Figue 9-1. Pumping station typical layout (continued)

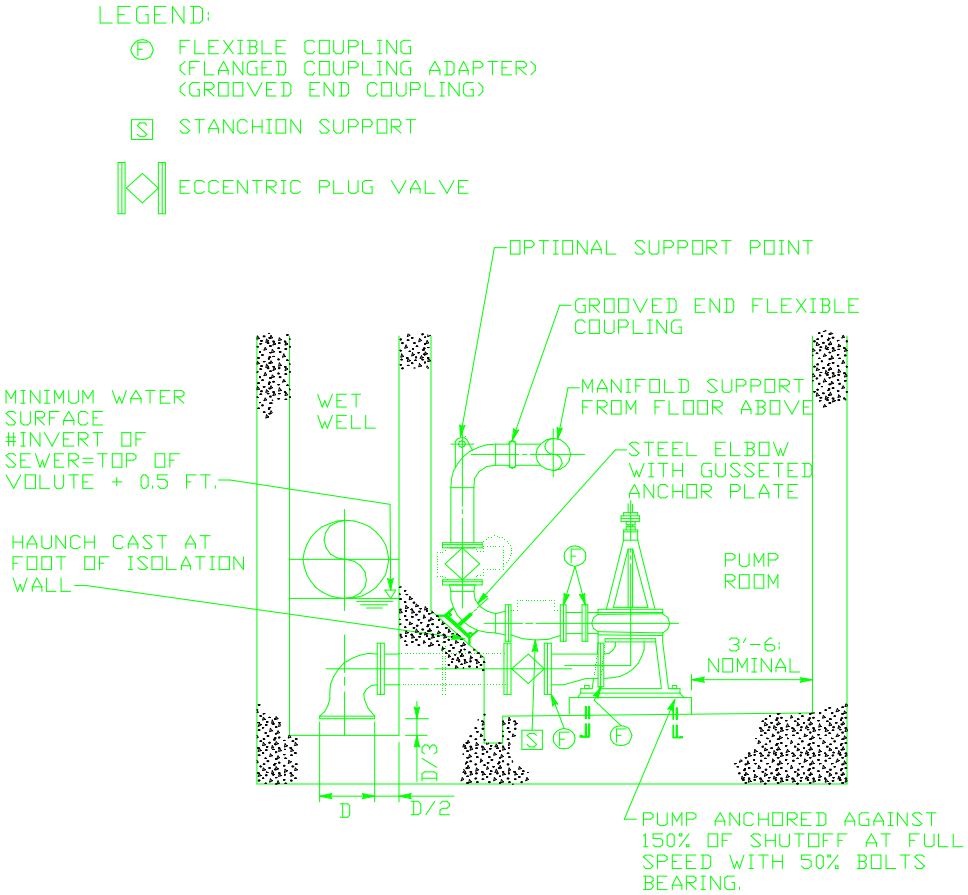

(b) EFFICIENT LAYOUT FOR SIMPLE PUMPING STAION WITH VARIABLE SPEED VERTICAL PUMPS

SOURCE: PUMPING STATION DESIGN, R.L. SANKS, ed., BUTTERWORTHS PUBLISHERS, 1989, p. 416

Figure 9-2. Pumping station sections

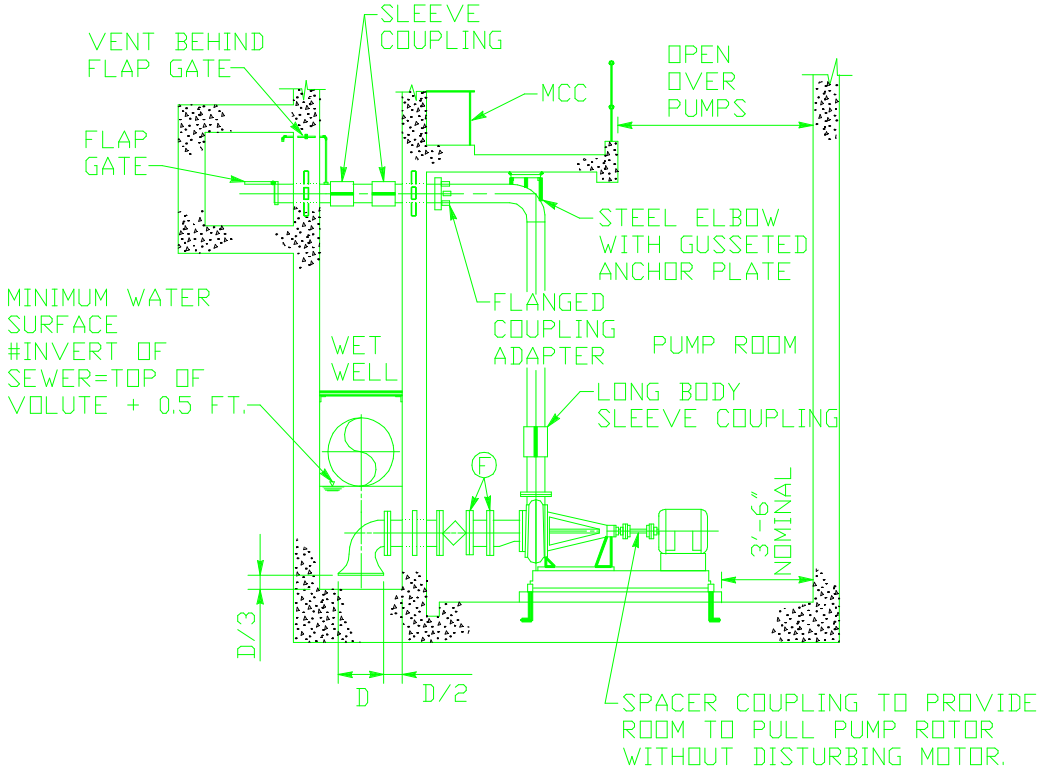

(b) EFFICIENT LAYOUT FOR SIMPLE PUMPING STAION WITH VARIABLE SPEED HORIZONTAL PUMPS

SOURCE: PUMPING STATION DESIGN, R.L. SANKS, ed., BUTTERWORTHS PUBLISHERS, 1989, p. 410

Figure 9-2. Pumping station sections (concluded)

9-5. HEATING AND VENTILATION.

a. Heating. All pumping stations subject to possible freezing will be supplied with automatically controlled heaters in the equipment areas. For unattended stations, temperatures will be maintained at 40 degrees F. Attended stations will be heated to 65 degrees F. Although wet wells are generally unheated, thermostatically controlled heaters may be used to prevent condensation on walls and floors during cool weather, provided the ventilation system is shut off.

b. Ventilation

(1) Wet wells will be provided with a positive ventilation capacity of 30 air changes per hour during occupancy, based onthe wet well volume below grade and above the minimum wastewater level.

(2) Unattended dry wells will be provided with a positive ventilation capacity of 30 air changes per hour. Attended drywells will be provided with a continuously-operated ventilation capacity of 6 air changes per hour, supplemented with additional ventilation in warm climates to remove pump motor heat to within 3° K (5° F). of the outside air temperature. Supply intakes and exhaust outlets must be located properly to introduce fresh air and remove hazardous gases or fumes. The wet and dry well sides of the station will be provided with separate ventilation systems.

9-6. ELECTRICAL EQUIPMENT AND LIGHTING. Pump station equipmentwill be suitable for operation at either 208V, 230V, or 480V, 60Hz, three phase power supplies. However, equipment with motors smaller than 0.4 kilowatt (0.5 horsepower), including meters, switches, timers, clocks, and similar equipment, will be suitable for operation at a 125V, 60 Hz, single phase power source.

a. Service transformers. Service transformer installations will conform to the requirements of TM 5-811-1/AFM 88-9, chapter 1.

b. Motor starters and controls. Motor starters and controls will be provided and housed in a factory assembled, free-standing control center located on the ground floor. The center will include motor starters, switches or circuit breakers,instrumentation and controls. A pump station requiring a fewsmall sized starters is an exception, and will employ wallmounted or stand mounted equipment.

c. Control for submersible pumps. Enclosures for submersible pump controls will be installed above grade.

d. Trouble alarms. Local trouble alarms will be provided atall pump stations. Alarms will be annunciated remotely fromunattended stations. Alarm systems will be provided with manual silencing.

9-7. STANDBY POWER. The requirement for fixed, standby power atwastewater pumping stations will depend upon the type, location,and critical nature of each pumping facility. For stationssituated in low lying areas, or in areas, remote from a treatmentplant, standby capability will be provided if a power outagewould result in flooding of the station, overflows at sewer manholes, backup of wastes into buildings, or any unlawfulpollution of the environment, or health hazard to personnel. Pumping stations located at or in conjunction with treatmentfacilities, such as those required for influent pumping,recycling or bypassing of flows, and pumping of effluent, willrequire standby power capability if the pumping is essential tocritical treatment processes, plant flow control, or is necessaryto maintain compliance with the discharge permit. If fixed standby power is required, refer to paragraph 6-3 for designcriteria when selecting pump drive units, and descriptions ofvarious arrangements to be used in providing fixed, standby powercapability at wastewater pumping stations.

9-8. WATER SUPPLY. A potable water supply is required at alllarge pump stations to supply washroom and toilet facilities,hydrants, hose bibs, and pump seal systems. A wash basin andtoilet facilities will be provided at pump stations which areattended regularly. Hose bibs will be provided at wet wells and in dry wells and bar screen rooms. Freeze proof wall hydrants will

be required for outdoor use. A positive separation will bemaintained between the potable water system and any piping orappurtenances subject to contamination. Warning signs will beposted at all water taps not directly connected to the potablewater supply. The positive separation will be accomplishedeither by providing a break with an air gap, or by installingbackflow prevention devices. Air Force facilities will complywith AFM 85-21.

9-9. FLOW MEASUREMENT. Flow meters installed to indicate andrecord the discharge from the pump station, and from individualpumps, will be provided at all medium to large sized stations. Ameter installed in the discharge header provides valuableinformation on the operation of the station, and will be required where pumping capacity is expected to increasesignificantly in the future. Pressure gages are required onindividual pump discharge lines, and on the station dischargeheader. Elapsed time clocks will be mounted on all pump motorstarters. For smaller stations utilizing constant speed pumps,an elapsed time clock may be used in lieu of a pipe mounted flowmeter to measure pump discharge. This will also aid inscheduling routine maintenance on the motor since most smallstations are unattended. A non-corrodible depth gage installedin the wet well will generally suffice for very small pumps;flows can be estimated from depth measurements taken manually. The types of flow measuring devices to be used for largewastewater pumps of the constant, adjustable or variable speedtype, include flow tubes, venturi meters, magnetic and ultrasonicflow meters

9-10. PAINTING AND PROTECTIVE COATS. The use of paints andprotective coatings at wastewater pumping stations will be inaccordance with current practices and environmental conditions. The protective coatings industry is constantly changing and creating improved and more environment specific products. A thorough investigation will be made in the design of protective coating systems. Paint materials selected will be appropriate for the types of surfaces being protected, both submerged and non-submerged. Coating systems will be designed to resist corrosion from the wastes being handled, and from gases and vapors present, taking into consideration the expected temperature and humidity variations within the station. Coating systems will consist of adequate surface preparation, and the application of prime and finish coats using compatible materials as recommended by the coatings manufacturer. All pumps and equipment will receive protective coatings in conformance with the manufacturer's recommendations. All ferrous materialsincluding galvanized surfaces will be protected. Particular carewill be taken to protect welds and threads at connections. Package type stations will be shipped to the construction sitewith factory applied paints and coatings sufficient for the required service.

CHAPTER 10

EVALUATION OF EXISTING SEWER SYSTEMS

10-1. PROBLEM. Obviously before a sanitary sewer system is expanded, the adequacy of the existing sewer and treatment system must be evaluated. This is generally the responsibility of the installation where the system is located. Large amounts of extraneous water now enter portions of many of these systems through infiltration of groundwater and through inflow from direct sources. This excess water has often lead to unnecessary expenses from pumping and treatment, reduced treatment efficiencies, treatment process upsets due to hydraulic shocks, and overflowing manholes and wet wells when the system's capacity is exceeded. This has lead to health hazards, permit violations, and fines to installations.

a. Infiltration. Water leaking from the ground into sewer systems is called infiltration. Its major sources are cracks in pipes, joints, manholes, and building laterals. The more a system deteriorates, the more infiltration occurs. Main trunk lines are often located in low lying areas such as swamps to allow gravity flow from the collection system. Most of these trunk lines now are major sources of infiltration.

b. Inflow. Direct connections such as roof drains, basement drains, yard drains, and storm sewer cross connections cause the inflow of relatively clean water into the system. Since it occurs during and immediately after a rainfall event, it can be a large quantity of water in a short period of time. Systems along waterways can experience inflow problems if the waterway floods into unsealed manholes.

10-2. SOURCES OF SEWER SYSTEM DETERIORATION. Deterioration of systems can be caused by stresses from surrounding soils and groundwater, surface loads, differential settling, temperature variations causing expansions and contractions, frost heave, the corrosive nature of the wastewater, and roots growing through joints. Such factors can lead to stress fractures in pipes and joints, crushed pipes, displaced joints, and cracked or collapsed manholes. Chemical degradation can result from microbial action releasing sulfide gas into the air where it oxidizes biologically to sulfuric acid. The acid is destructive to concrete and in old brick manholes has destroyed the mortar around the bricks. The presence of sulfates also leads to microbiological induced corrosion.

10-3. INFILTRATION/INFLOW ANALYSIS. An infiltration/inflow (I/I) analysis is used to demonstrate the non-existence or possible existence of excessive I/I in the system. Rainfall and flows within the study area or subareas must be monitored during dry, low groundwater conditions, during and after major rainfall events, and during high groundwater conditions. This is often accompanied with monitoring groundwater gauges in the immediate vicinity of the system.The increase in flows during and immediately after rains is considered to be inflow and the increases after surface water has runoff and during high groundwater conditions are infiltration. The analysis includes a comparison to water records and interviews with key operating personnel. An estimate of the cost of eliminating the I/I conditions is compared to the costs of transporting and treating the I/I. Other factors to be considered include reducing the probability of sewer cave-ins and adverse effects of overflows. If the analysis indicates that it may be worthwhile to eliminate the I/I sources the system is evaluated in more detail in small areas. Means for closer evaluations include smoke testing, physical inspections and remote inspections.

10-4. SMOKE TESTING. The introduction of smoke under low pressure into a sealed off portion of the sewer system is used to determine sources of inflow. This method is effective in indicating:

- Roof, basement, yard, area, and foundation drains
- Abandoned building sewers
- Faulty connections
- Illegal connections
- Cross-connections with storm sewers
- Structurally damaged manholes.

Shallow deteriorated joints and pipes may also be detected in porous soil.

10-5. PHYSICAL INSPECTIONS. A visual inspection of the system above ground is important in:

- Confirming maps
- Determining the structural condition of manholes, including rings, covers, cone and walls, steps, bench, and inverts
- Detecting settling of manholes or backfill
- Detecting evidence of ponding or surcharging.

Personnel can also enter manholes and, using mirrors and bright sunlight or portable, high candlepower lamps, look down sewer lines to detect displaced joints, sediments, blockages, roots entering joints, collapsed lines, and uneven settling. The lines should be cleaned prior to the inspection.

10-6. REMOTE INSPECTIONS. A closer inspection can be made using a closed circuit television camera, an ultrawide angle lens, and a high resolution monitor. After the line has been cleaned of debris and roots, the camera is pulled through the sewer between manholes using a variable speed electric wrench. Plugs are used to cut off flows. Photographs can be made of defects as well as a videotape.

CHAPTER 11

REHABILITATION OF EXISTING SYSTEMS

11-1. REHABILITATION VERSUS REPLACEMENT.

a. Infiltration. Techniques for rehabilitating sewer systems to eliminate infiltration are presented in detail in USA-CERL Technical Report N-88/25. Their evaluation and applicability to problems are briefly discussed in the following paragraphs along with other techniques of trenchless. All of these techniques work best in small areas and are generally not effective in correcting problems throughout an old, deteriorated system. It is generally best to replace shallow lines where excessive or difficult trenching is not required. These correction techniques also work best when there are leaks at joints but the sewer is structurally sound. Systems with extensive deterioration most often must be replaced rather than repaired. It is important to note that in most systems the major source of infiltration is building laterals which are generally shallow and can be excavated and replaced.

b. Inflow. Inflow problems are generally much easier to correct than infiltration. Manhole covers in roadways or depressed areas are sources of inflow and can be prevented by covering holes with bolts and sealing around the cover with tar, caulk, insulating foam, or a flexible gasket. All cross connections must be eliminated.

11-2. GROUTING. Once locations requiring grouting has been identified using remote television inspection and flows stopped, grout is applied manually in large lines and at manholes and by remote control in smaller lines or where hazards exist. The type of grout to use depends on the type and size of the crack, experience of the installation personnel and external pressure. This method should be used only for spot repairs and where further cracking or settling is not anticipated. It is best at joints where the grout has deteriorated or was not properly installed and not where the joints have separated or been damaged by external stresses.

11-3. CEMENT LINING. Use of cement lining is restricted to sealing large cracks and adding protective liners in wetwells, manholes, and sewers over 36 inches in diameter in which workers can enter the pipe. It is commonly used in brick manholes where hydrogen sulfide accumulations have decimated the cement mortar. Portland cement or shotcrete (at least 100 mm (4 inches) thick) is the most common type of cement liner but is not impervious to hydrogen sulfide attacks. There are, however, other types of cement, such as that with a calcium aluminate base, which are advertised to better resist deterioration caused by hydrogen sulfides.

11-4. SLIPLINING. This technique, which involves pulling or pushing a new pipe through an existing pipe, will have the greatest application for systems where joint compounds have deteriorated but the pipes are structurally sound and have not experiencing differential settling. Sliplining with flexible plastic pipe, especially polyethylene, after debris and roots have been removed, has been effective in temperate climates but should not be used if large temperature fluctuations are anticipated unless methods are used to control temperature-related contraction and expansion. Grouting or casing spacers are needed to hold the new pipe firmly in place. If the structural damage to the existing pipe is severe, continuous grouting is needed. If there is the possibility for significant external pressure to be exerted, such as from a high water table, the pipe specified must be rigid enough to withstand the pressure. Even though there are methods for making connections to laterals, it is best to use sliplining on sections that do not have laterals.

11-5. CURED IN PLACE PIPE (CIPP). In this process a soft, pliable tube, general referred to as a soft liner, is forced by water or air into the sewer. The tube negotiates displaced pipes and cures to a rigid liner. It is an expensive process but does not require excavation and service can be continued after only one day. In a one CIPP process the tube is felt, impregnated with thermo-setting polyester or epoxy resins. Other materials are also available but many CIPP processes are patented and could potentially require sole source justification. Generally CIPP should be allowed as one of several options or with performance specifications that do not prevent competition among manufacturers or other rehabilitation methods.

11-6. DEFORMED/FOLDED LINERS. Another method for restoring pipe integrity is that of installing a deformed or folded liner into an existing pipe and then reforming the liner with heat and pressure to fit tightly to the inside diameter of the original pipe. This results in a rigid liner. Various manufacturers have different names for their products.

a. Deformed/Reformed. In this process, high density polyethylene pipe is deformed in a "u" shape at the manufacturing plant during the manufacturing process and supplied in long continuous lengths on coils. The pipe is pulled into place through existing openings and reformed by means of steam and low pressures. This method utilizes sufficient wall thickness to be considered a "stand alone" product which does not rely entirely on the host pipe for its structural strength. This process is controlled by guidelines given in ASTM F 1533 and offers the advantage of being able to reinstate service laterals internally by means of a remote controlled cutter.

b. Folded. Currently PVC is used as the "folded liner", specifications for which are given in ASTM F 1504. This product is folded flat at the manufacturing plant, delivered to the site in coils, preheated, and then pulled into place in the host pipe. Once in position, the product is formed by hot water, steam, or hot air and pressure. Service laterals can also be remotely installed.

11-7. PIPE BURSTING. Each of the previous methods for rehabilating sewers reduce the interior diameter of the pipe. A method of replacing existing pipe with equal or larger pipe (up to 50 percent larger in cross sectional area) and without excavating the pipe is known as pipe bursting, impact mole, or the pipeline insertion method (PIM). The process, first developed for replacing gas mains, uses an impact mole to burst the existing pipe outward into the surrounding soil and replaces it with new pipe (generally high density polyethylene). An entry pit is prepared at one end of the existing pipe and a pneumatic pipe bursting mole, which can include an expander, is set up at the pipe opening. A winch is positioned at the exit point and a steel cable guides the mole toward the end. The percussive action of the pneumatic equipment and the constant tension of the winch forces the mole through the existing pipe. When replacing pressure pipe the new pipe is towed behind the mole, while with gravity sewers, the new pipe can also be hydraulically jacked behind the mole, which increases the distance between entry pits. Generally, entry pits are required between every other manhole. Connection of laterials also requires excavation. The mole can burst even cast iron pipe but can not maneuver through bends. Further information can be found in USACERL Technical Manuscript N-91/08, "Review of PIM (Pipeline Insertion Method) Technology".

11-8. PIPE CRUSHING. The pipe crushing process is also a trenchless construction method. In it, high density polyethylene pipe is installed in the same operation as the pipe crushing. Essentially the process involves the use of a crushing head that implodes and crushes the existing pipe inward thus causing minimum disturbance to the surrounding soil and allowing close uses to existing utilities or structures. Just behind the crushing head, a steel cone clears away the crushed pipe and excess soil, making room for the new pipe. Forward progress of the

crushing head may be aided by the use of a hydraulic pulling unit or other apparatus. The replacement pipe is pulled into place directly behind the pipe crushing tools. With this method pipe from 150 to 300 mm (6 to 12 inches) can be replaced with the same size pipe or with larger pipe, up to 300 mm (12 inches). A modification of the crushing head called a "ripper" may be used to facilitate installation.

11-9. OTHER METHODS. Due to the large demand for cost reduction, new processes for trenchless rehabilitation are constazntly being developed. Many of these have patents and could require sole source justification if other processes are not allowed. Generally such processes should be allowed only as one of several options or with performance specifications that do not prevent other methods from being considered.

APPENDIX A
REFERENCES

GOVERNMENT PUBLICATIONS

Department of Defense

DOD 4270.1-M	Construction Criteria Manual

Departments of the Army and the Air Force

TM 5-805-4/AFM 32-1090	Noise and Vibration Control
TM 5-809-10/AFM 88-3, Chap. 13	Seismic Design for Buildings
TM 5-810-5/AFM 32-1070, Chap. 4	Plumbing
TM 5-811-1/AFJMAN 32-1080	Electrical Power Supply and Distribution Chapter 1
TM 5-811-7	Electrical Design: Cathodic Protection
TM 5-813-5/AFM 88-10, Vol. 7	Water Supply, Water Distribution
TM -813-9	Water Supply: Pumping Station
TM 5-814-3/AFM 88-11, Vol. 3	Domestic Wastewater Treatment
TM 5-814-8	Evaluation Criteria Guide for Water Pollution, Control and Abatement Programs
TM 5-852-5/AFR 88-19, Vol. 5	Arctic and Subarctic Construction Utilities

Department of the Army

U.S. Army Construction Engineering Research Laboratory (USA-CERL)

Technical Manuscript N-91/08	Review of RIM (Pipeline Insertion Method) Technology (September 1991)
Technical Report N-88/25	Wastewater Collection System Rehabilitation Techniques for Army Installations (November 1988)
EM 1110-2-3400	Painting: New Construction and Maintenance (30 April 1995)

Department of the Air Force

AFM 85-21 and AFM 88-45	Operation and Maintenance of Cross Control Backflow Prevention Services Civil Engineering Corrosion Control -Cathodic Protection

U.S. Environmental Protection Agency, Technology Transfer Office, Process Design Manual for Sulfide Control in Sanitary Sewerage Systems, Cincinnati, 1974.

NONGOVERNMENT PUBLICATIONS

American Concrete Pipe Association(ACPA)
11800 Sunrise Valley Dr., Suite 309
Reston, VA 22091 — Concrete Pipe Handbook (1988)

American National Standards Institute (ANSI)
New York, NY

ANSI A21.50 — Thickness Design of Ductile Iron Pipe

American Society for Testing and Materials (ASTM)
Philadelphia, PA

ASTM C 150	(1994) Portland Cement
ASTM D 2657	(1994) Heat-Joining Polyolefin Pipe and Fittings
ASTM F1504	(1994) Folded Polyvinyl chloride (PVC) Pipe for Existing Sewer and Conduit Rehabilitation
ASTM F1533	(1994) Deformed Polyethylene (PE) Liner

Asbestos Cement Pipe Producers Association (ACPPA)
Arlington, VA

ACPPA-01 — (1988) Recommended Work Practices for A/C Pipe,

American Water Works Association (AWWA),
6666 West Quincy Ave., Denver, CO 80235

Manual No. M9	(1979) Concrete Pressure Pipe Manual
Manual No. M11	Steel Pipe Design and Installation
AWWA C105	(1993) Polyethylene Encasement for Ductile-Iron Piping for Water and Other Liquids

Cast Iron Soil Pipe Institute (CISPI)
5959 Shallowford Rd. Suite 419,
Chattanooga, TN 37421 — (1994) Cast Iron Soil Pipe & Fittings Handbook

Uni-Bell PVC Pipe Association (UBPPA)
2655 Villa Creek Dr., Suite 155
Dallas, TX 75234 — (1982) Handbook of PVC Pipe-Design and Construction

Water Environment Federation (WEF)
2626 Pennsylvania Ave. NW
Washington, DC 20037 — (1982) Manual of Practice FD-5 Gravity Sanitary Sewer Design and Construction
(1994) Pretreatment of Industrial Waste, Manual of Practice FD-3

Karassik, I. J., W. C. Krutzsch, W. H. Fraser, & J. P. Messina, eds., Pump Handbook, McGraw-Hill, New York, 1986.

Metcalf & Eddy, Inc., Wastewater Engineering: Collection and Pumping of Wastewater, McGraw-Hill, New York 1981.

National Association of Corrosion Engineers, Control of External Corrosion on Underground or Submerged Metallic Piping Systems, NACE RP0169, Houston.

National Clay Pipe Institute (NCPI), Clay Pipe Engineering Manual, Lake Geneva, WI, 1995.

Sanks, R. L., ed., Pumping Station Design, Buttersworth, Boston, 1989.

APPENDIX B
EXAMPLE PROBLEMS

B-1. Design 1 mile of interceptor sewer serving a military installation with the following populations and industrial discharges.

20,000 residents living on the installation (100 gpcd--Table 3-1)
6,000 nonresidents or employees coming from off-post and working 8-hour shifts (30 gpcd --Table 3-1)
Peak industrial flowrate = 1.0 mgd
Allow for an infiltration rate of 1000 gpd/in/mi.

Domestic Flows

20,000 x 100	= 2,000,000 gpd = 2.0 mgd
6,000 x 30	= 180,000 gpd = 0.18 mgd
total average daily flow	= 2.18 mgd

Use a 24-hour basis since waste load is from the entire installation, and 92 percent of total is generated by residents.

Extreme peak flowrate

$R = 3.8/(2.18)^{0.167}$	= 3.34
3.34 x 2.18	= 7.28 mgd
Peak diurnal flowrate	= 1/2 x 7.28 = 3.64 mgd

Infiltration Allowance
Assume a 30-inch sewer 1000 X 30 x 1 = 30,000 gpd = 0.03 mgd
Design Flows

Extreme peak	= 7.28 + 0.03 + 1.0 = 8.31 mgd
Peak diurnal	= 3.64 + 0.03 + 1.0 = 4.67 mgd
Average daily	= 2.18 + 0.03 + 1.0 = 3.21 mgd

Typical Sewer Design
Try a 30-inch sewer on a 0.10 percent slope (n = 0.013)
Flow depths and velocities

Q = 8.31 mgd	d/D = 0.80 < 0.90 (Para. 3-2)	V = 3.0 fps
Q = 4.67 mgd	d/D = 0.53	V = 2.7 fps > 2.5 fps
Q = 3.21 mgd	d/D = 0.43	V = 2.5 fps > 2.0 fps

Critical depths

Q = 8.31 mgd	dc/D = 0.48 < 0.80	
Q = 4.67 mgd	dc/D = 0.36 < 0.53	Flows are subcritical
Q = 3.21 mgd	dc/D = 0.30 < 0.43	

B-2. Design 2000 feet of main or trunk sewer serving a large portion of the above installation with the following facilities.

Family Housing
500 units with 1800 residents (500 x 3.6 at 100 gpcd--Table 3-1)

Commercial Buildings
10 offices with 700 nonresidents, or employees from off-post, working 8-hour shifts (30 gpcd --Table 3-1)

Elementary School
500 students for 8 hours per day, 200 of the students live in the area and 300 are nonresidents (30 gpcd--Table 3-1)

Laundromat
50 machines--open 12 hours per day (500 gpd/machine is a typical allowance)

Domestic Flows

Resident 1800 x 100	= 180,000 gpd on a 24-hour basis
Nonresident (700 + 300) x 30	= 30,000 gpd on an 8-hour basis

Note that the nonresident population includes office workers and students who do not live in the area.

total average daily flow	= 210,000 gpd

Use a 24-hour basis since wastes are from a large area on the installation and 85 percent is generated by residents.

Extreme peak flowrate

R	= $38.2/(210{,}000)^{0.167}$ = 4.93
4.93 x 210,000	= 1,035,300 = 1.04 mgd
Peak diurnal flowrate	= 1/2 x 1.04 = 0.52 mgd

Industrial Flow
Laundromat

50 x 500	= 25,000 gpd over 12 hours
Peak flowrate	= 50,000 gpd = 0.05 mgd

Infiltration Allowance
Assume a 12-inch sewer

1000 x 12 x (2000/5280)	= 4545 gpd = 0.005 mgd

Design Flows

Extreme peak	= 1.04 + 0.005 + 0.05 = 1.095 mgd
Diurnal peak	= 0.52 + 0.005 + 0.05 = 0.575 mgd
Average daily	= 0.21 + 0.005 + 0.05 = 0.265 mgd

Typical Sewer Design
Try a 12-inch sewer on a 0.35 percent slope (n = 0.013).

Flow depths and velocities

Q = 1.095 mgd	d/D = 0.68 < 0.80 (para. 3-2)	V = 2.9 fps
Q = 0.575 mgd	d/D = 0.46	V = 2.5 fps = minimum
Q = 0.265 mgd	d/D = 0.30	V = 2.5 fps = minimum

Critical depths

Q = 1.095 mgd	dc/D = 0.55 < 0.68	
Q = 0.575 mgd	dc/D = 0.40 < 0.46	Flows are subcritical

Q = 0.265 mgd dc/D = 0.26 < 0.30

B-3. Design 1000 feet of lateral sewer for a small tributary area on the above installation with the following flows.

Offices
2 buildings with 100 employees working 8-hour shifts (30 gpcd is a typical allowance)

Theater
300 seats--open 10 hours per day (3 gpd/seat typical allowance)

Shop
30 employees working 8-hour shifts (30 gpcd is a typical allowance)
No industrial wastes

Domestic Flows
Offices, Theater and Shop

100 x 30	= 3000 gpd over 8 hours
300 x 3	= 900 gpd over 10 hours
30 x 30	= 900 gpd over 8 hours
total average daily flow	= 4800 gpd

Use an 8-hour basis since tributary area is small and all occupants are short term.

Average hourly flowrate	= 4800/8 = 600 gph
Extreme peak flowrate	
R	= 22 5/$(600)^{0.167}$ = 7.73
7.73 x 600	= 4637 gph
Peak diurnal flowrate	= 1/2 x 4637 = 2319 gph

Infiltration Allowance
Assume an 8-inch sewer (minimum size).

1000 x 8 x (1000/5280)	= 1515 gpd = 63 gph

Design Flows

Extreme peak	= 4637 + 63 = 4700 gph
Diurnal peak	= 2319 + 63 = 2382 gph
Average hourly	= 600 + 63 = 663 gph

Typical Sewer Design
Try an 8-inch sewer on a 3.0 percent slope (n = 0.013).

Flow depths and velocities

Q = 4700 gph	d/D = 0.20	V = 3.5 fps
Q = 2382 gph	d/D = 0.13	V = 2.7 fps > 2.5 fps
Q = 663 gph	d/D = 0.05	V = 2.0 fps = minimum

Critical depths

Q = 4700 gph	dc/D = 0.29 > 0.20*
Q = 2382 gph	dc/D = 0.20 > 0.13*

* Note that supercritical flow will result here. The critical slope equals 0.65 percent.

However, a slope of 3.0 percent is required to produce the minimum velocity of 2.0 fps. Considering that the sewer is of minimum size, and that a flatter slope is not feasible if adequate velocity is to be provided, supercritical flow would be justified in this case.

B-4. Design a short lateral sewer to serve a battalion headquarters area with 5 companies, each consisting of 100 men. Facilities include a 500 man barracks complex, administrative of fices, motor pool and mess hall. During the normal 8-hour workday a total of 300 people work in the area, 100 residents (out of 500 total) plus 200 nonresiding officers, NCO's and civilian employees. No industrial wastes are generated. A per capita allowance of 50 gpd from Table 3-1 will be used for the barracks buildings, and 30 gpcd is a typical allowance for office and shop workers.

Domestic Flows

300 x 30	= 900 gpd on an 8-hour basis
500 x 50	= 25,000 gpd on a 16-hour basis
total average daily flow	= 34,000 gpd

Compute average hourly flowrates

For 8 hours - 9000/8	= 1125 gph
For 16 hours - 25,000/16	= 1563 gph

Use the 1563 gph as the average hourly flowrate

Extreme peak flowrate

$R = 22.5/(1563)^{0.167}$	= 6.59
6.59 x 1563	= 10,300 gph
Peak diurnal flowrate	= 1/2 x 10,300 = 5150 gph

Design Flows

Extreme peak	= 10,300 gph
Peak diurnal	= 5150 gph
Average hourly	= 1563 gph

Typical Sewer Design

Try an 8-inch sewer on a 1.4 percent slope (n = 0.013)

Flow depths and velocities

Q = 10,300 gph	d/D = 0.35	V = 3.3 fps
Q = 5150 gph	d/D = 0.25	V = 2.8 fps > 2.5 fps
Q = 1563 gph	d/D = 0.14	V = 2.0 fps = minimum

Critical depths

Q = 10,300 gph	dc/D = 0.43 > 0.35*
Q = 5150 gph	dc/D = 0.30 > 0.25*
Q = 1563 gph	dc/D = 0.17 > 0.14*

* Again flow would be supercritical, but since a slope of 1.4 percent is required to produce the maximum velocity of 2.0 fps (S_c = 0.7 percent), and the sewer is of minimum size, supercritical flow is justified.