Enclosure 3

Examples of Simplified Acquisition Procedure (SAP)

Example B

9676 R0696J104

PURCHASE REQUEST AND COMMITMENT

For use of this form, see AR 37-1; the proponent agency is OASA(FM)

1. PURCHASE INSTRUMENT NO.: JEEDPP-6073-0043
2. REQUISITION NO.:
3. DATE: 13 March 1996
PAGE 1 OF 1 PAGES

4. TO: Purchasing and Contracting Officer
5. THRU: CEPOJ-RM
6. FROM: CEPOJ-PP-A

It is requested that the supplies and services enumerated below or on attached list be

7. PURCHASED FOR: Install Antenna Pad, Hady Barracks, Tokyo, Japan
8. DELIVERED TO:
9. NOT LATER THAN (Date): ASAP

The supplies and services listed below cannot be secured through normal supply channels or other Army supply sources in the immediate vicinity, and their procurement will not violate existing regulations pertaining to local purchases for stock, therefore, local procurement is necessary for the following reason: *(Check appropriate box and complete item.)*

10. NAME OF PERSON TO CALL FOR ADDITIONAL INFORMATION: Mr. Nelson Lee
11. TELEPHONE NUMBER: 263-5034

12. LOCAL PURCHASES AUTHORIZED AS THE NORMAL MEANS OF SUPPLY FOR THE FOREGOING BY
13. REQUISITIONING DISCLOSES NONAVAILABILITY OF ITEMS AND LOCAL PURCHASE IS AUTHORIZED BY

EMERGENCY SITUATION PRECLUDES USE OF REQUISITION CHANNELS FOR SECURING ITEM

FUND CERTIFICATION

The supplies and services listed on this request are properly chargeable to the following allotments the available balances of which are sufficient to cover the cost thereof, and funds have been committed.

19. ACCOUNTING CLASSIFICATION AND AMOUNT
2162050 608-8121 P70000000-3220
S94626 (PZ) RG611962012A100 (284)

14. ITEM	15. DESCRIPTION OF SUPPLY OR SERVICES	16. QUANTITY	17. UNIT	18. ESTIMATED UNIT PRICE a	18. ESTIMATED TOTAL COST b
1.	Contract Services For: Install Antenna Pad, Hardy Barracks, Tokyo Japan	1	LS	¥2,324 000	¥2,324,000
	TOTAL AMOUNT			¥2,324,000	¥2,324,000 (¥98.53/$1.00) =$23,586.72

20. TYPED NAME AND TITLE OF CERTIFYING OFFICER: Kenneth A. Littlefield, Chief, RM Office
21. SIGNATURE
22. DATE: 3/27/96

23. DISCOUNT TERMS

24. PURCHASE ORDER NUMBER

25. THE FOREGOING ITEMS ARE REQUIRED NOT LATER THAN AS INDICATED ABOVE FOR THE FOLLOWING PURPOSE

26. DELIVERY REQUIREMENTS

ARE MORE THAN 7 DAYS REQUIRED TO INSPECT AND ACCEPT THE REQUESTED GOODS OR SERVICES YES ☐ NO ☐

IF YES, NUMBER OF DAYS REQUIRED

27. TYPED NAME AND GRADE OF INITIATING OFFICER: Nelson A. Lee GS/12
28. SIGNATURE
29. DATE: 13MAR96
30. TELEPHONE NUMBER: 263-5034

31. TYPED NAME AND GRADE OF SUPPLY OFFICER: Curtis W. Hughs, GS/9
32. SIGNATURE
33. DATE: 26 Mar 96

34. TYPED NAME AND GRADE OF APPROVING OFFICER OR DESIGNEE: MARK M. SCHNABEL, COL, EN Commanding
35. SIGNATURE
36. DATE: 26 MAR 96

'96 MAR 26 P3:08

DA FORM 3953, MAR 91 EDITION OF AUG 76 IS OBSOLETE USAPPC V1.0

REQUEST FOR QUOTATIONS
(THIS IS NOT AN ORDER)

This RFQ ☐ is ☒ is not a small business-small purchase set-aside (52.219-4)

PAGE 1 OF 27 PAGES

1. REQUEST NO.	2. DATE ISSUED	3. REQUISITION/PURCHASE REQUEST NO.	4. CERT. FOR NAT. DEF. UNDER BDSA REG. 2 AND/OR DMS REG. 1	RATING
DACA79-96-T-0006	APR 15 96	JEEDPP 6073 0043		

5A. ISSUED BY

U.S. ARMY ENGINEER DISTRICT, JAPAN
BLDG 250, ROOM 147, CAMP ZAMA, ZAMA-SHI
ATTN: PROCUREMENT BRANCH
KANAGAWA-KEN JAPAN 228

6. DELIVER BY (Date)

JUN 14 96

5B. FOR INFORMATION CALL: (Name and telephone no.) (No collect calls)

Hayato Okamoto B03 0462-52-0081

7. DELIVERY

☒ FOB DESTINATION ☐ OTHER (See Schedule)

8. TO: NAME AND ADDRESS, INCLUDING ZIP CODE

Vendor ID: 00000000

JAPAN

9. DESTINATION (Consignee and address, including ZIP Code)

SEE SCOPE OF WORK

10. PLEASE FURNISH QUOTATIONS TO THE ISSUING OFFICE ON OR BEFORE CLOSE OF BUSINESS (Date)

APR 30 96

11. BUSINESS CLASSIFICATION (Check appropriate boxes)

a. Standard Industrial Classification Code _____

b. Small Business Size Standard _____

☐ SMALL ☐ OTHER THAN SMALL ☐ DISADVANTAGED ☐ WOMEN-OWNED

IMPORTANT: This is a request for information, and quotations furnished are not offers. If you are unable to quote, please so indicate on this form and return it. This request does not commit the Government to pay any costs incurred in the preparation of the submission of this quotation or to contract for supplies or services. Supplies are of domestic origin unless otherwise indicated by quoter. Any representations and/or certifications attached to this Request for Quotations must be completed by the quoter.

12. SCHEDULE (Include applicable Federal, State and local taxes)

ITEM NO. (a)	SUPPLIES/SERVICES (b)	QUANTITY (c)	UNIT (d)	UNIT PRICE (e)	AMOUNT (f)
	Attached hereto and made a part hereof are STATEMENT OF WORK (SOW), consisting of four (4) pages and Drawing, consisting of thirteen (13) pages.				
0001	Install Antenna Pad, Hardy Barracks, Tokyo, Japan	1.00	LS	_____.____	_____.__

13. DISCOUNT FOR PROMPT PAYMENT	10 CALENDAR DAYS	20 CALENDAR DAYS	30 CALENDAR DAYS	CALENDAR DAYS
	%	%	%	%

NOTE: Additional provisions and representations ☒ are ☐ are not attached.

14. NAME AND ADDRESS OF QUOTER (Street, city, county, State and ZIP Code)	15. SIGNATURE OF PERSON AUTHORIZED TO SIGN QUOTATION	16. DATE OF QUOTATION
	17. NAME AND TITLE OF SIGNER (Type or print)	18. TELEPHONE NO. (Include area code)

PREVIOUS EDITION NOT USABLE

EXCEPTION TO STANDARD FORM 18 (REV. 10-83) Approved by GSA/IRMS 9/97
Prescribed by GSA
FAR (43 CFR) 53.215-1(a)

STATEMENT OF WORK FOR
INSTALL ANTENNA PAD
HARDY BARRACKS, TOKYO, JAPAN

1. GENERAL: The Contractor shall furnish all labor, material, equipment, transportation and supervision necessary to install antenna pad as shown on attached drawings.

2. LOCATION: The job site is located at Bldg. No. 1, Hardy Barracks, Japan.

3. SCOPE OF WORK: The Contractor shall verify all dimensions and existing conditions before commencement of work. The Contractor shall install antenna pier kit as shown on site plan:

a. Install pier kit for antenna. Pier kit shall be Government Furnished Materials. The Contractor shall be responsible for calling the Far East Network (FEN) ph: 0425-52-2511 ext. 52366, Mr. Kermit Allen,to arrange shipment and delivery of the Antenna pier kit. The Government shall deliver the pier kit with-in five working days of the request for delivery. If Mr. Kermit Allen is not in then the alternate points of contacts are:
MSgt. Victor Martinez ph: 0425-52-2511 ext 52370
Tsgt. Manuelito Castillo ph: 0425-52-2511 ext 52395
Mr. Yoshio Kishikawa ph: 0425-52-2511 ext 55551

b. Provide empty PVC conduit with pull wire as shown on plans.

c. The Contractor shall get all necessary permits and passes required prior to installing the pier kit.

d. The Contractor shall notify FEN and the Kanagawa Resident Office five (5) days prior to completing the installation of the pier kit for final inspection of the pier kit. The Contractor shall allow FEN to install the antenna prior to installing the chain link fence. The Contractor shall allow FEN 15 working days for FEN to complete the antenna installation.

e. The Contract shall provide grounding for lightning protection as described in the attached plans.

f. Phasing shall be as follows:
(1). Notice to proceed.
(2). Notify FEN that pier kit is required. (5 Working Days).
(3). Install pier kit and all conduit. (15 working days).
(4). Notify FEN and Kanagawa Resident Office five (2) days in advance prior to completion for partial final inspection.
(5). Allow fifteen (15) working days for FEN to install antenna.
(6). Install fence and arrange for final inspection of fence.

4. GENERAL NOTES:

a. The Contractor shall coordinate all work with the Kanagawa Area Office (Mr. Makar) at DSN 263-7055 or commercial 0462-51-1520-263-7055.

b. No storage will be provided on site.

c. The Contractor shall clean his area at the completion of each work day. All trash and debris will but removed from the Army base.

d. The performance period shall not exceed 37 working days after the Notice to Proceed is issued. Time extensions may be granted based on the coordination and installation of the antenna by FEN, subject to the approval of the Contracting Officer.

e. Contractor's may observe a similar antenna installed at FEN -Tokyo Station Yokota Air Base by contacting personnel listed in paragraph 3a above.

5. MATERIALS: Unless otherwise indicated, all contractor furnished material and parts shall be new. The material shall conform to the standards specified in the design documents.

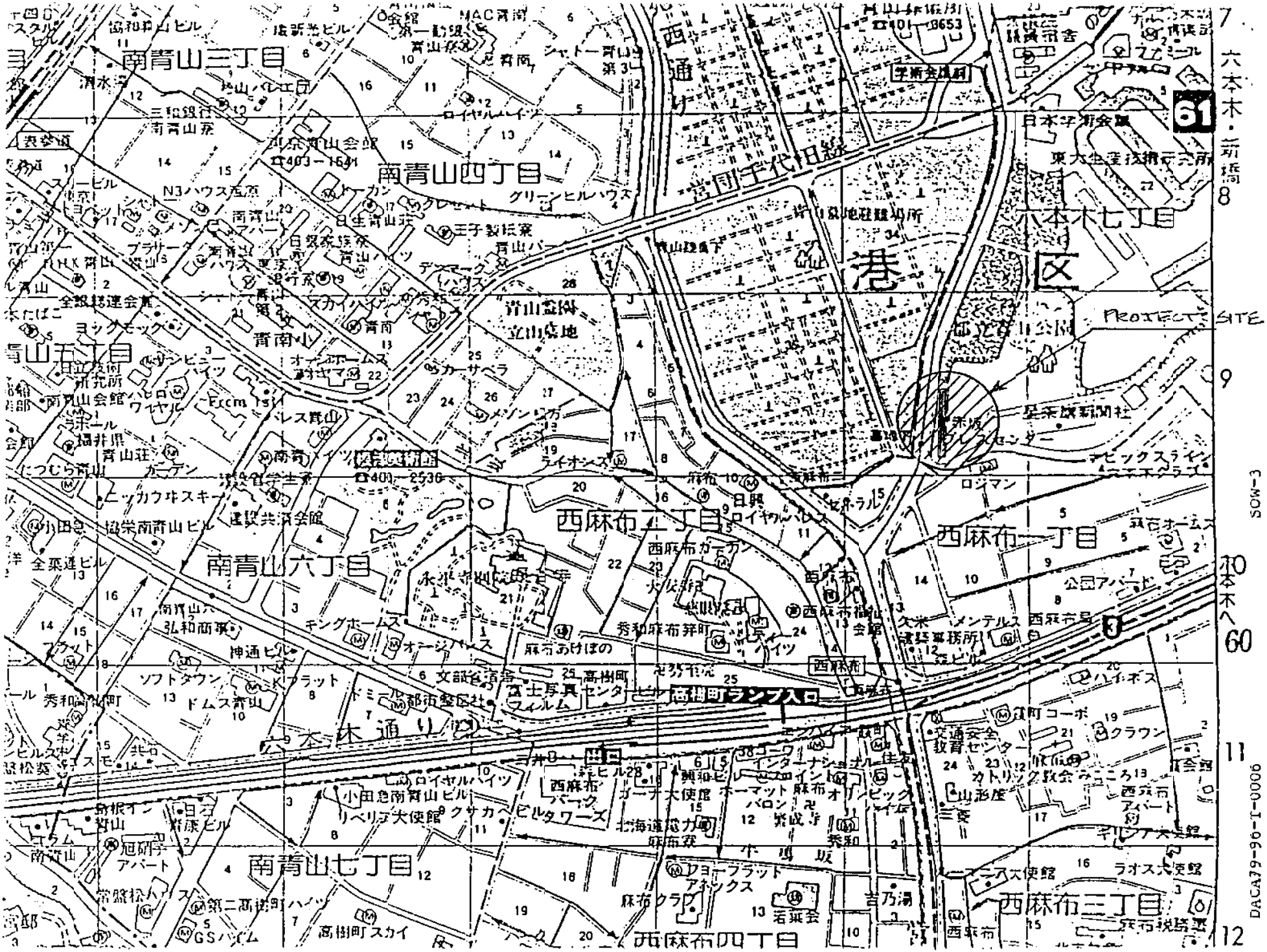

南青山三丁目
南青山四丁目
南青山五丁目
南青山六丁目
南青山七丁目
西麻布二丁目
西麻布一丁目
西麻布三丁目
西麻布四丁目
六本木七丁目
港区
六本木通り
西通り
宮団千代田線
表参道
六本木・新橋
六本木へ
PROJECT SITE
61
60
7
8
9
10
11
12
SOW-3
DACA79-96-I-0006

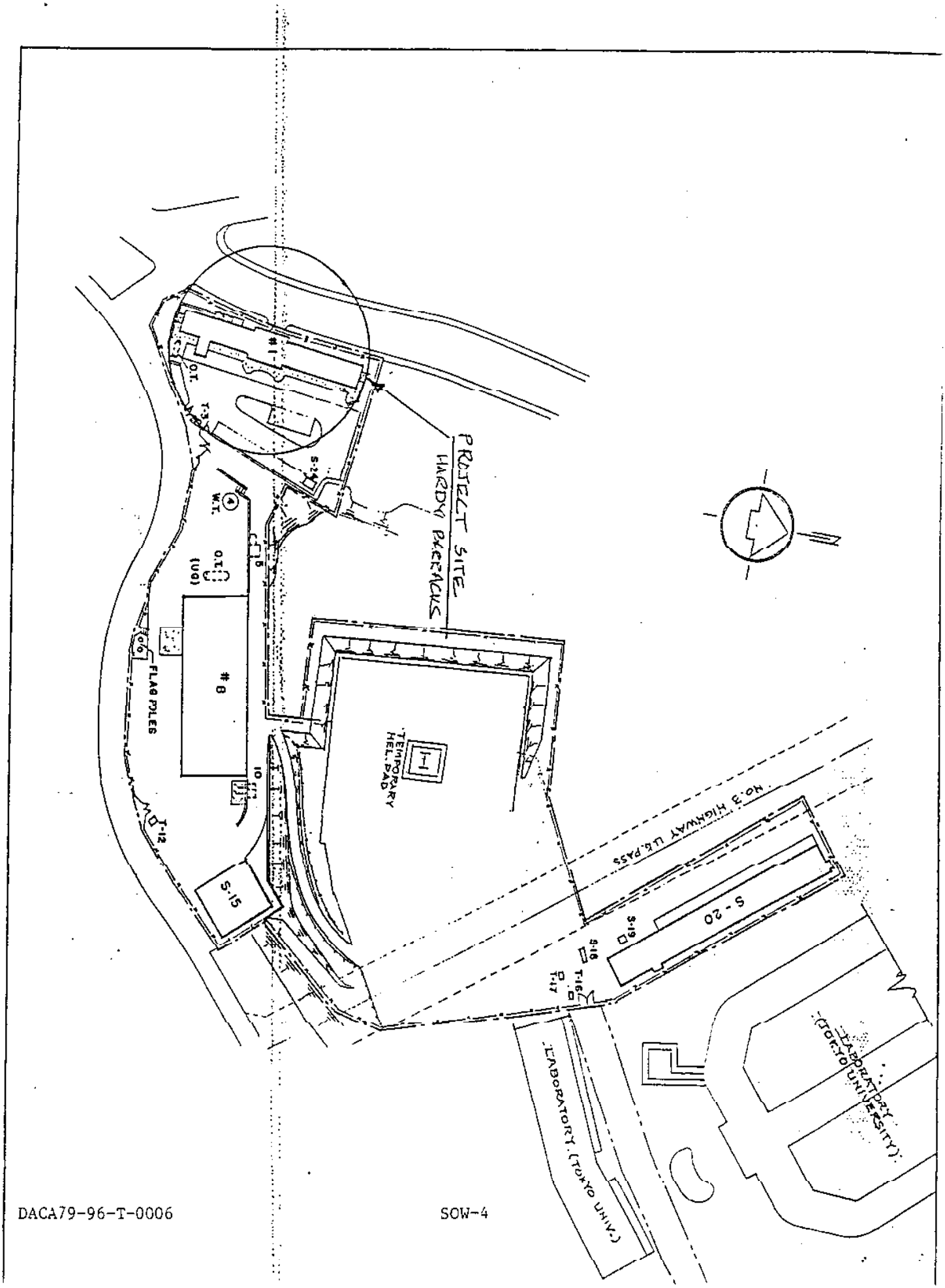
PROJECT SITE
HARDY BARRACKS
#1
O.T.
T-3
S-24
W.T.
O.T.
(UG)
#8
FLAG POLES
T-12
S-15
TEMPORARY HEL. PAD
NO. 3 HIGHWAY U.S. PASS
S-20
S-19
S-18
T-16
T-17
LABORATORY (TOKYO UNIV.)
LABORATORY (TOKYO UNIVERSITY)

ENGINEERING DIVISION
US ARMY ENGINEER DISTRICT, JAPAN
UNIT 45010 APO AP 96343

ANTENNA PAD
SANNO HOTEL

TOKYO, JAPAN

FEB 1 2 1996

FINAL

DATE: 2/12/96	PROJECT TITLE: ANTENNA PAD SANNO HOTEL, TOKYO, JAPAN	DRAWING NUMBER					
PREPARED:		LOC. CODE	PREFIX	CLASS	TYPE	SEQUENCE	SHEET
CHECKED:		8155	XF	740	32	0003	T-1

ORIGINAL IN RED

SCHEDULE OF DRAWINGS

RING NO	DRAWING NO	SHEET NO	DESCRIPTION OF DRAWINGS	REVISION STATUS
1	8155-XF-740-32-0003	T-1	TITLE SHEET	
2	8155-XF-740-32-0003	T-2	SCHEDULE OF DRAWINGS	
3	8155-XF-740-32-0003	T-3	REVISIONS	
4	8155-XF-740-32-0003	T-4	SCOPE OF WORK/GENERAL NOTES	
5	8155-XF-740-32-0003	T-5	GENERAL NOTES	
6	8155-XF-740-32-0003	T-6	APPROVAL	
7	8155-XF-740-32-0003	T-7	LEGEND/ABBREVIATIONS	
8	8155-XF-740-32-0003	C-1	SANNO HOTEL PLAN	
9	8155-XF-740-32-0003	C-2	ANTENNA PLAN AND SECTION	
10	8155-XF-740-32-0003	E-1	CONDUIT PLAN	
11	8155-XF-740-32-0003	E-2	DETAIL	

DATE: 7/17/96	PROJECT TITLE: ANTENNA PAD SANNO HOTEL, TOKYO, JAPAN	DRAWING NUMBER					
PREPARED:		LOC. CODE	PREFIX	CLASS	TYPE	SEQUENCE	SHEET
CHECKED:		8155	XF	740	32	0003	T-2

ORIGINAL IN RED

(2)

REVISIONS

SHEET NO	REV LTR	ZONE	DESCRIPTION	DATE	BY	APPROVED

DATE: 2/12/96	PROJECT TITLE: ANTENNA PAD SANNO HOTEL, TOKYO, JAPAN	DRAWING NUMBER				
PREPARED: AP		LOC. CODE	PREFIX	CLASS	TYPE	SEQUENCE	SHEET
CHECKED: [illegible]		8155	XF	740	32	0003	T-3

ORIGINAL IN RED

SCOPE OF WORK:

1. INSTALL ROOF PAD FOUNDATION, TO INCLUDE CONCRETE WORK, INSTALLATION OF GROUNDING AND CONDUIT, CLEANUP AND ALL OTHER INCIDENTAL WORK.

GENERAL NOTES:

1. THE CONTRACTOR SHALL NOTIFY THE CONTRACTING OFFICER OF ANY DISCREPANCIES AT THE JOB SITE.

2. THE CONTRACTOR SHALL COORDINATE ALL WORK WITH THE SANNO HOTEL MANAGEMENT AND THE CONTRACTING OFFICER PRIOR TO START OF WORK.

3. PIER FOOT(301636), ANCHOR BOLTS(514338), NUTS(514339), AND WASHERS WILL BE SUPPLIED TO THE CONTRACTOR(GFM). ALL OTHER MATERIALS AND EQUIPMENT SHALL BE FURNISHED BY THE CONTRACTOR.

FOUNDATION CONSTRUCTION NOTES:

1. CONCRETE SHALL BE IN CONFORMANCE TO JIS A 5308,1993 READY-MIXED CONCRETE. MINIMUM COMPRESSIVE STRENGTH SHALL BE 210KG/SQ CM(3,000PSI). AIR ENTRAINMENT SHALL BE 4-6%. SLUMP SHALL NOT EXCEED 7 CM SLAB SHALL BE STEEL TROWED OR FLOAT FINISHED. CURE CONCRETE FOR 7 DAYS.

2. DO NOT USE LEVELING NUTS UNDER THE FOOT, 301636. THE FOOT MUST REST FLUSH ON THE CONCRETE PAD. USE ONE WASHER AND ONE FLUOROCARBON COATED NUT, 514339, PER ANCHOR BOLT TO SECURE FOOT TO THE PAD. AFTER THE CONCRETE ACQUIRES THE DESIGN STRENGTH, TORQUE THE NUTS TO 100-110 FOOT-LBS.

3. AREAS (150 X 300) UNDER EACH MOUNTING FOOT SHALL BE SMOOTH AND SHALL NOT VARY BY 1.6MM. THREE MOUNTING FEET SHALL BE LEVEL WITH RESPECT TO ONE ANOTHER WITHIN 3.2MM.

ELECTRICAL NOTES:

1. ELECTRICAL ITEMS SHALL BE IN CONFORMANCE TO THE FOLLOWING JIS STANDARDS:
JIS C 8305 (1992) RIGID STEEL CONDUITS
JIS C 8330 (1991) FITTINGS FOR RIGID METAL CONDUITS
JIS C 8336 (1991) BOXES FOR RIGID METAL CONDUITS
JIS C 8340 (1991) SURFACE ACDESSORY FOR RIGID METAL CONDUIT
JIS C 8430 (1991) UNPLASTICIZED POLYVINYL CHLORIDE (UPVC) CONDUIT

2. COMMUNICATION CONDUIT SHALL CONSIST OF THICK WALL RIGID STEEL CONDUIT WITH PULLWIRE FOR BUILDING EXTERIOR, AND SHALL CONSIST OF THIN WALL RIGID STEEL CONDUIT WITH PULLWIRE FOR BUILDING INTERIOR OR PVC (INT/EXT) WITH PULLWIRE..

3. STEEL CONDUIT BEND SHALL NOT BE LESS THAN 6 TIMES THE CONDUIT DIAMETER

4. IF PVC CONDUIT IS USED, PROVIDE A JUNCTION BOX AT EACH BEND.

5. PROPER ELECTRICAL GROUNDING SHALL BE PROVIDED BY THE CONTRACTOR TO MEET APPLICABLE LOCAL CODES. THE CONTRACTOR MUST SECURLY ATTACH THE NEW ANTENNA SYSTEM METAL STRUCTURE (IMBEDED METAL ANTENNA FOOTING) TO THE NEW SANNO HOTEL BUILDING GROUNDING SUBSYSTEM TO REDUCE THE DIFFERENCE IN ELECTRICAL POTENTIAL BETWEEN THE ANTENNA AND THE SATELLITE RECEIVING EQUIPMENT WHICH IS LOCATED IN THE HOTEL EQUIPMENT ROOM.

DATE: 7/12/96	PROJECT TITLE: ANTENNA PAD SANNO HOTEL, TOKYO, JAPAN GENERAL NOTE	DRAWING NUMBER					
PREPARED: AT		LOC. CODE	PREFIX	CLASS	TYPE	SEQUENCE	SHEET
CHECKED: HW		8155	XF	740	32	0003	T-4

ORIGINAL IN RED

ELECTRICAL NOTES:

5. LIGHTNING PROTECTION GROUNDING: THE LIGHTNING ROD FOR THE NEW ANTENNA SHALL BE SECURELY BONDED TO THE SANNO HOTEL LIGHNTING PROTECTION GROUND ELECTRODE. THE CONTRACTOR SHALL RUN A GROUNDING CABLE FROM THE SANNO HOTEL LIGHTNING PROTECTION ELECTRODE TO THE NEW ANTENNA PAD. IN THE ABSENCE OF AN EXISTING HOTEL LIGHTNING PROTECTION GROUND SYSTEM IN THE PROXIMITY OF THE NEW ANTENNA LOCATION, THE CONTRACTOR SHALL PROVIDE A SUITABLE GROUND ROD/ELECTRODE IN THE EARTH AND RUN THE SAME SIZE CABLE TO THE NEW ANTENNA SITE. REF: NATIONAL ELECTRIC CODE/NFPA. RESISTANCE OF THE GROUND SUBASSEMBLIES SHALL NOT EXCEED 25 Ohms (OR AS CLOSE AS POSSIBLE TO THIS READING).

6. ALL EXPOSED CONDUIT AND BOXES TO BE PAINTED TO MATCH EXISTING SURFACES.

7. PROVIDE SEISMIC BRACING FOR CONCEALED CONDUIT IN CEILING SPACE.

DATE: 2/12/96 PREPARED: AM CHECKED: MW	PROJECT TITLE: ANTENNA PAD SANNO HOTEL, TOKYO, JAPAN GENERAL NOTE	DRAWING NUMBER					
		LOC. CODE	PREFIX	CLASS	TYPE	SEQUENCE	SHEET
		8155	XF	740	32	0003	T-5

ORIGINAL IN RED

PROJECT COORDINATION APPROVAL

CUSTOMER	DATE
DAVID MOLLENDOR. UA15. DNC DIRECTOR. NEW SANNO HOTEL	16 FEB '96
KERMIT D. ALLEN. GM-13 DAF Engineering and Maintenance Mgr. AFNEWS	22 FEB '96

DATE: 2/12/96	PROJECT TITLE: ANTENNA PAD SANNO HOTEL. TOKYO. JAPAN	DRAWING NUMBER					
PREPARED:		LOC. CODE	PREFIX	CLASS	TYPE	SEQUENCE	SHEET
CHECKED:		8155	XF	740	32	0003	T-6

ORIGINAL IN RED

LEGEND / ABBREVIATIONS

@	AT
C	CONDUIT
CONC	CONCRETE
CM	CENTIMETER
DIA	DIAMETER
EW	EACHWAY
EXST	EXISTING
EXT	EXTENSION
JIS	JAPAN INDUSTRY STANDARDS
KG	KILOGRAM
LBS	POUNDS
m	METER
mm	MILLIMETER
PSI	POUNDS PER SQUARE INCH
SQ	SQUARE
TYP	TYPICAL

DATE: 2/12/94	PROJECT TITLE: ANTENNA PAD SANNO HOTEL, TOKYO, JAPAN	DRAWING NUMBER					
PREPARED: 4		LOC. CODE	PREFIX	CLASS	TYPE	SEQUENCE	SHEET
CHECKED: HW		8155	XF	740	32	0003	T-7

ORIGINAL IN PER

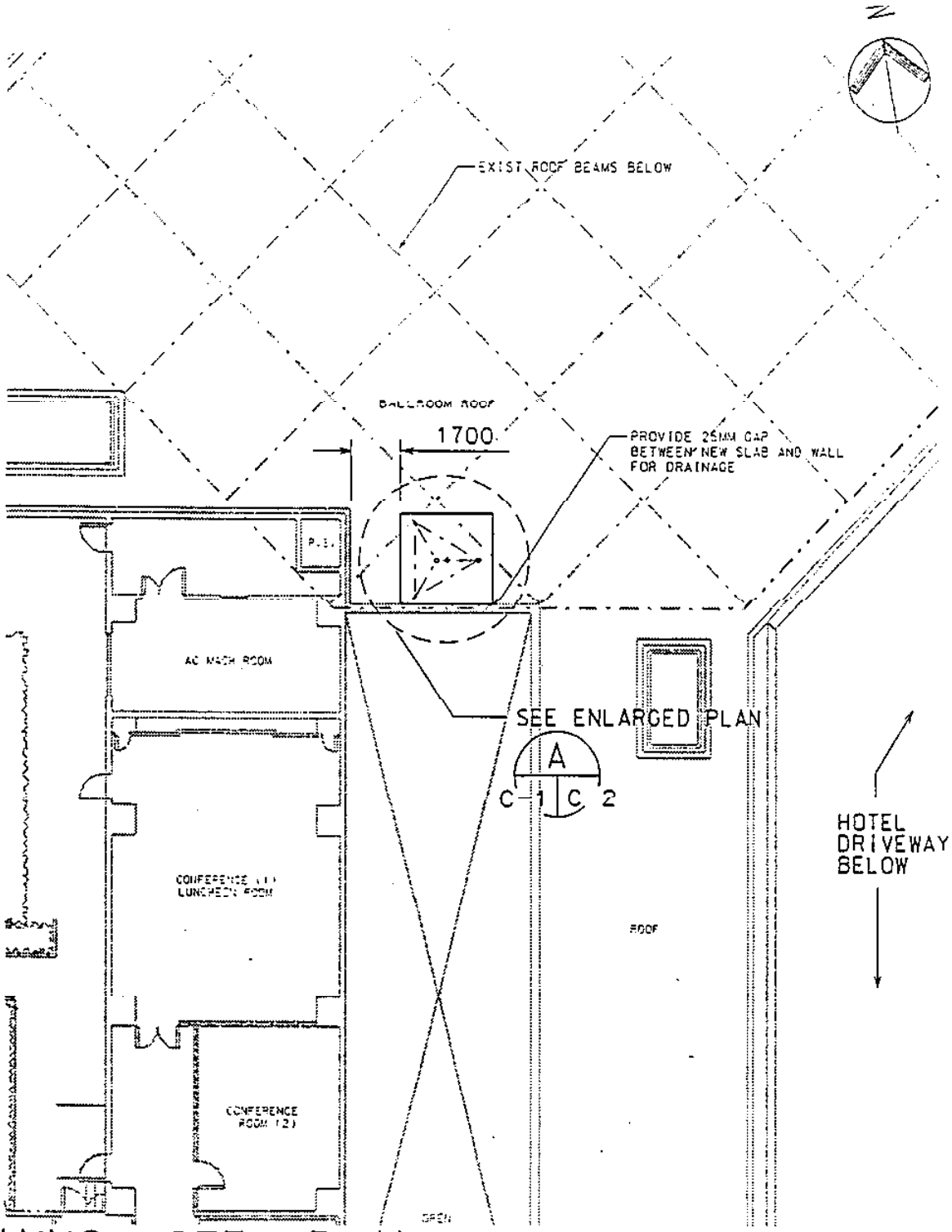

SANNO HOTEL PLAN (3RD FLR)

SCALE : 1 : 200

0 2 4 6 8 10

GRAPHIC SCALE : 1 : 200

DATE: 2/12/96	PROJECT TITLE: ANTENNA PAD SANNO HOTEL. TOKYO. JAPAN SANNO HOTEL PLAN	DRAWING NUMBER					
PREPARED:		LOC. CODE	PREFIX	CLASS	TYPE	SEQUENCE	SHEET
CHECKED:		8155	XF	740	32	0003	C-1

ORIGINAL IN RED

(8)

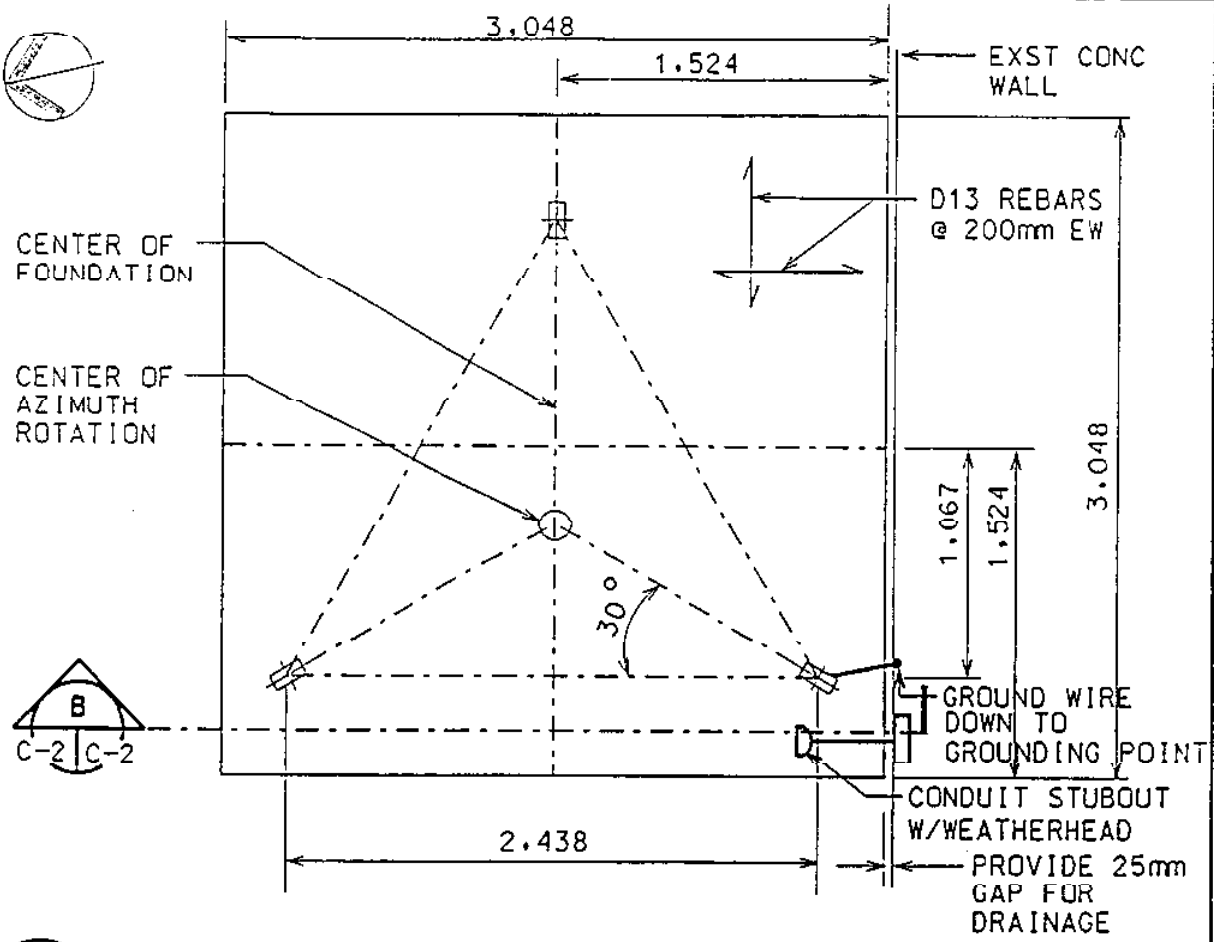

A C-1 | C-2

SANNO ANTENNA PAD PLAN

NOT TO SCALE

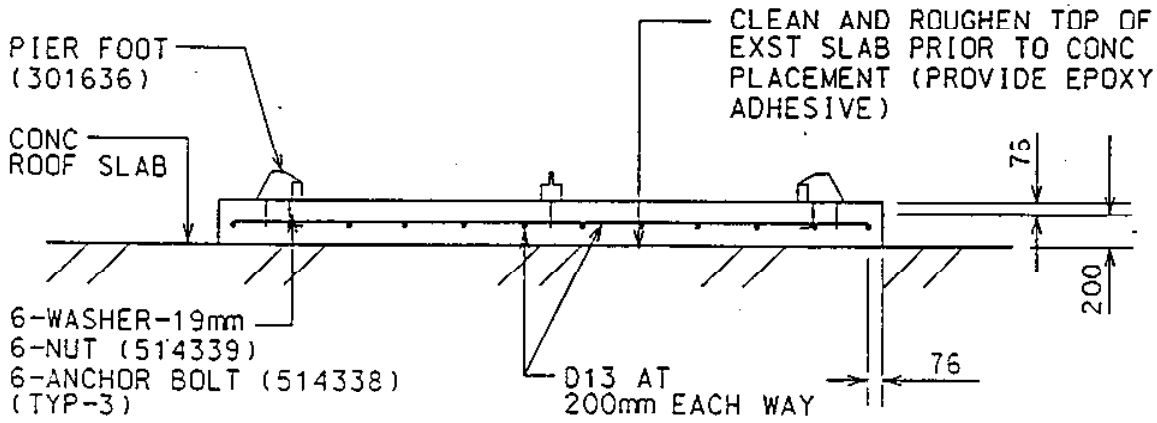

B C-2 | C-2

SANNO ANTENNA PAD SECTION

NOT TO SCALE

DATE: 2/12/96	PROJECT TITLE: ANTENNA PAD SANNO HOTEL, TOKYO, JAPAN ANTENNA PAD PLAN & SECTION	DRAWING NUMBER					
PREPARED:		LOC. CODE	PREFIX	CLASS	TYPE	SEQUENCE	SHEET
CHECKED:		8155	XF	740	32	0003	C-2

ORIGINAL IN RED

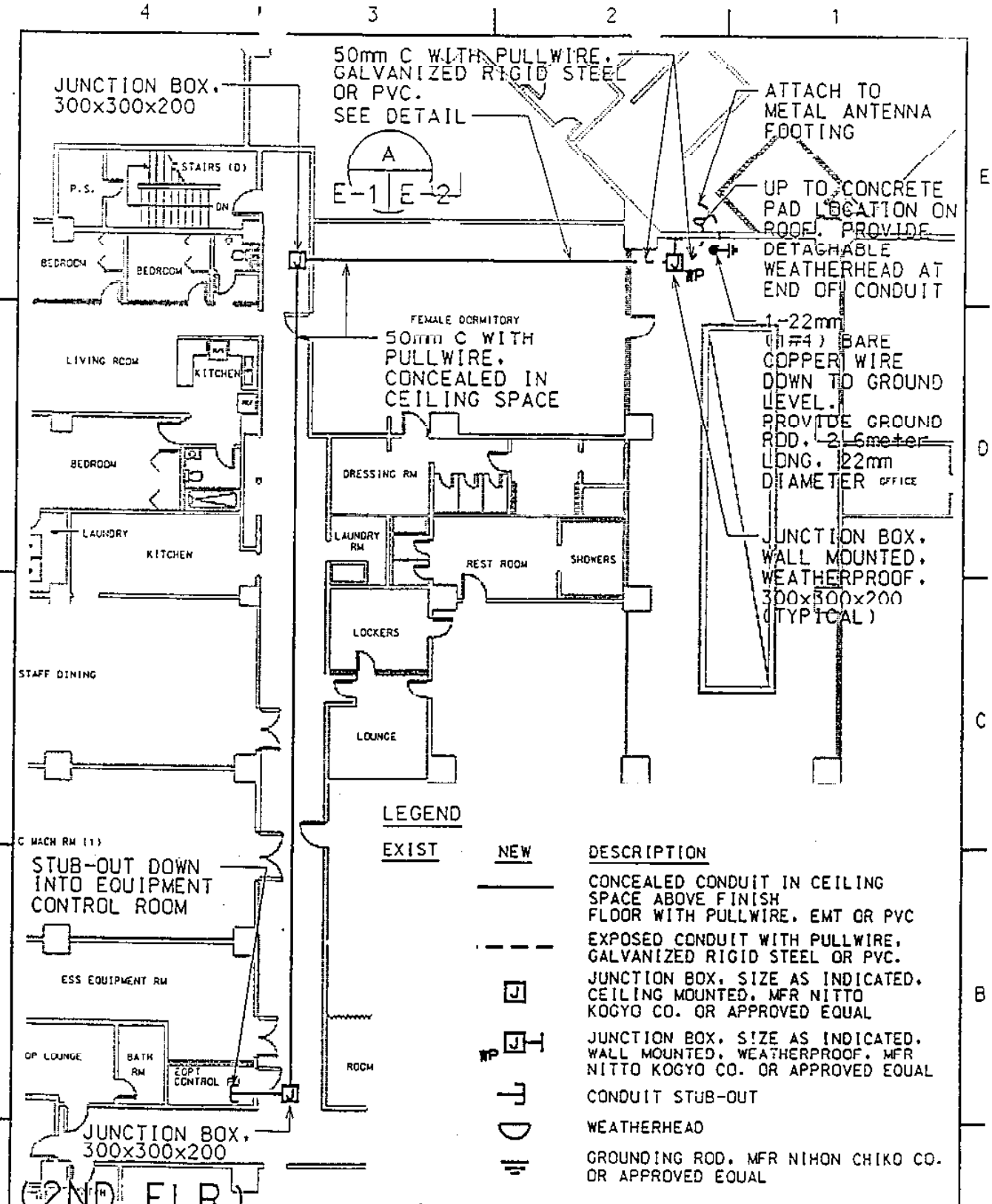

DATE: 2/12/91	PROJECT TITLE: ANTENNA PAD SANNO HOTEL, TOKYO, JAPAN CONDUIT PLAN	DRAWING NUMBER					
PREPARED:		LOC. CODE	PREFIX	CLASS	TYPE	SEQUENCE	SHEET
CHECKED:		8155	XF	740	32	0003	E-1

ORIGINAL IN RED

10

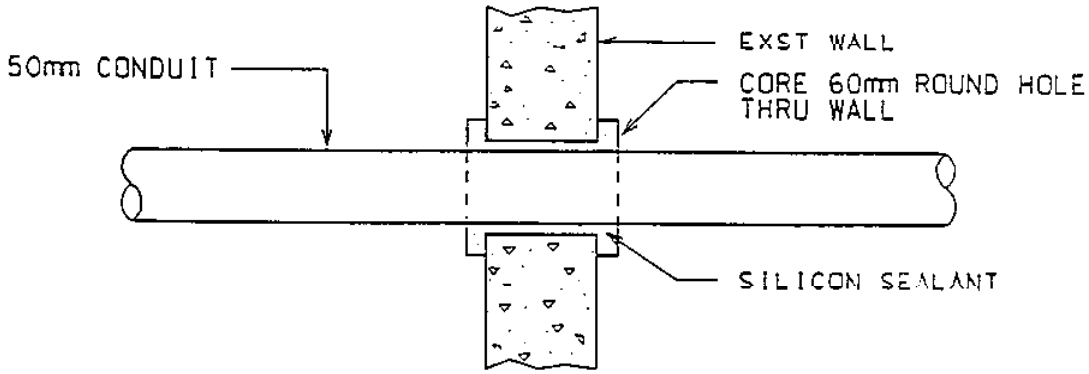

A
E-1 | E-2

CONDUIT PENETRATION DETAIL

NOT TO SCALE

DATE: 2/12/94	PROJECT TITLE: ANTENNA PAD SANNO HOTEL, TOKYO, JAPAN CONDUIT PENETRATION DETAIL	DRAWING NUMBER				
PREPARED:		LOC. CODE	PROJ.	CLASS	TYPE	SEQUENCE	SHEET
CHECKED:		8155	XF	740	32	0003	E-2

ORIGINAL IN RED

(11)