UFC 3-460-03F
21 JANUARY 2003

UNIFIED FACILITIES CRITERIA (UFC)

# OPERATION AND MAINTENANCE: MAINTENANCE OF PETROLEUM SYSTEMS

APPROVED FOR PUBLIC RELEASE; DISTRIBUTION UNLIMITED

# UNIFIED FACILITIES CRITERIA (UFC)

## OPERATION AND MAINTENANCE:
## MAINTENANCE OF PETROLEUM SYSTEMS

Any copyrighted material included in this UFC is identified at its point of use.
Use of the copyrighted material apart from this UFC must have the permission of the copyright holder.

U.S. ARMY CORPS OF ENGINEERS

NAVAL FACILITIES ENGINEERING COMMAND

AIR FORCE CIVIL ENGINEER SUPPORT AGENCY (Preparing Activity)

Record of Changes (changes are indicated by **1**\ ... /**1**/)

| Change No. | Date | Location |
|---|---|---|
| | | |
| | | |

The format of this document does not conform to UFC 1-300-01.
It will be reformatted at the next revision.

**This UFC supersedes AFM 85-16, *Maintenance of Petroleum Systems*.**

# FOREWORD

The Unified Facilities Criteria (UFC) system is prescribed by MIL-STD 3007 and provides planning, design, construction, sustainment, restoration, and modernization criteria, and applies to the Military Departments, the Defense Agencies, and the DoD Field Activities in accordance with USD(AT&L) Memorandum dated 29 May 2002. UFC will be used for all DoD projects and work for other customers where appropriate.

UFC are living documents and will be periodically reviewed, updated, and made available to users as part of the Services' responsibility for providing technical criteria for military construction. Headquarters, U.S. Army Corps of Engineers (HQUSACE), Naval Facilities Engineering Command (NAVFAC), and Air Force Civil Engineer Support Agency (AFCESA) are responsible for administration of the UFC system. Defense agencies should contact the preparing service for document interpretation and improvements. Technical content of UFC is the responsibility of the cognizant DoD working group. Recommended changes with supporting rationale should be sent to the respective service proponent office by the following electronic form: Criteria Change Request (CCR). The form is also accessible from the Internet sites listed below.

UFC are effective upon issuance and are distributed only in electronic media from the following sources:

- Unified Facilities Criteria (UFC) Index http://65.204.17.188//report/doc_ufc.html.
- USACE TECHINFO Internet site http://www.hnd.usace.army.mil/techinfo.
- NAVFAC Engineering Innovation and Criteria Office Internet site http://criteria.navfac.navy.mil.
- Construction Criteria Base (CCB) system maintained by the National Institute of Building Sciences at Internet site http://www.ccb.org.

Hard copies of UFC printed from electronic media should be checked against the current electronic version prior to use to ensure that they are current.

AUTHORIZED BY:

Dwight A Beranek, P.E.
Chief, Engineering and Construction Division
U.S. Army Corps of Engineers

Dr. James W Wright, P.E.
Chief Engineer
Naval Facilities Engineering Command

Kathleen I. Ferguson, P.E.
The Deputy Civil Engineer
DCS/Installations & Logistics
Department of the Air Force

Frank Lane
Director of Analysis & Investment
Deputy Under Secretary of Defense
for Installations and Environment
Department of Defense

*Civil Engineering*

*MAINTENANCE OF PETROLEUM SYSTEMS*

**COMPLIANCE WITH THIS PUBLICATION IS MANDATORY**

---

OPR: HQ AFCESA/CESM (Mr. Pat Mumme)
Supersedes: AFM 85-16, 18 August 1981

---

This manual implements Air Force Policy Directive (AFPD) 32-10, *Installations and Facilities*, by providing guidance for base and command liquid fuels maintenance (LFM) personnel with guide procedures for field maintenance of permanently installed Air Force-owned, -leased, or -controlled petroleum storage and dispensing systems. It also supplements detailed manufacturers' instructions on specific equipment and applies to all Air Force systems and activities for which the civil engineer (CE) has maintenance responsibility.

**Chapter 1—SCOPE AND RESPONSIBILITY**

1.1. Purpose and Scope ..... 7

1.2. Organizational Responsibilities ..... 7

**Chapter 2—PIPELINE SYSTEMS**

2.1. On-Base Pipelines ..... 11

2.2. Operating On-Base Petroleum Systems ..... 11

2.3. Maintenance of On-Base Pipelines ..... 11

2.4. Off-Base Pipeline Systems ..... 13

2.5. General Pipeline System Components ..... 15

2.6. General Pipeline System Repairs ..... 15

2.7. Major Repairs ..... 16

2.8. Pipeline Cleaning ..... 16

**Chapter 3—MECHANICAL SYSTEMS**

3.1. General Information ..... 17

3.2. Pumps ..... 17

Figure 3.1. Rotary Vane Pump ..... 17

Figure 3.2. Horizontal Split-Case Pump ..... 18

Figure 3.3. Vertical Deepwell Turbine Pump ..... 19

Figure 3.4. Hydraulic Gradient....20
3.3. Filter/Separators (F/S)....21
3.4. Meters....24
3.5. Valves....24
Figure 3.5. DBB Valve....25
Figure 3.6. Ball Valve....26
Figure 3.7. Full Port Ball Valve....26
Figure 3.8. Gate Valve....27
3.6. Sump Pumps....27
3.7. Line Strainers....28
3.8. Automatic Air Eliminators....28
3.9. Truck and Tank Car Offloading....28
3.10. Tanker or Barge Offloading....28
3.11. Fill Stands....28
3.12. Ground Product Fueling Systems....29
**Chapter 4—HYDRANT FUELING SYSTEM, TYPE I (PANERO)**
4.1. General Information....31
4.2. Original Panero....31
Figure 4.1. Modified Panero, Type I Hydrant System....32
4.3. Modified Panero System Operation....32
4.4. System Components....32
Figure 4.2. Nonsurge/Check Valve (81AF)....33
Figure 4.3. F/S Control Valve (40AF-2A)....34
Figure 4.4. Refuel/Defuel Control Valve (302AF)....35
Figure 4.5. Philadelphia Hydrant Adapter....36
Figure 4.6. Liquid Level Gauge (Liquidometer)....37
Figure 4.7. High-Level Shutoff Valve (124AF)....38
**Chapter 5—HYDRANT FUELING SYSTEM, TYPE II (PRITCHARD)**
5.1. General Information....39
Figure 5.1. Pritchard, Type II Hydrant System....40
5.2. Deep-Well (Vertical) Turbine Pump....40
5.3. Nonsurge/Check Valve....40
Figure 5.2. Nonsurge/Check Valve (81AF-8)....41

5.4. F/S ..... 41
5.5. F/S Control Valve (FSCV) (40AF-2C) ..... 41
Figure 5.3. F/S Control Valve (40AF-2C) ..... 42
5.6. Refueling Control Valve (90AF-8) ..... 42
Figure 5.4. Refueling Control Valve (90AF-8) ..... 43
5.7. Pressure Relief Valve (50AF-2) ..... 43
Figure 5.5. Pressure Relief Valve (50AF-2) ..... 44
5.8. Defueling Control Valve (134AF) ..... 45
Figure 5.6. Defueling Control Valve (134AF) ..... 45
5.9. Dual Rate-of-Flow Control Valve (41AF) ..... 45
Figure 5.7. Dual Rate-of-Flow Control Valve (41AF) ..... 46
5.10. Recommended Setting Procedure for Rate-of-Flow Control Valve (41AF) ..... 46
5.11. Defueling Pump ..... 46
Figure 5.8. Self-Priming Centrifugal Defueling Pump ..... 47
Figure 5.9. Centrifugal Priming Pump Operation ..... 47
5.12. Remote Controls (Electrical and Magnetic) ..... 48
5.13. Hydrant Adapter and Liquid Control Valve (352AF) ..... 48
Figure 5.10. Hydrant Adapter (352AF) ..... 48
5.14. Hydrant Hose Cart ..... 49
5.15. High-Level Shut-Off (HLSO) ..... 49
Figure 5.11. HLSO Valve (129AF) ..... 49
5.16. Type II Modified (Rapid Flow) ..... 49
Figure 5.12. Combination Dual Rate-of-Flow Control Valve and Solenoid Valve (41AF-10) ..... 50
Figure 5.13. Dual Pressure Relief, Solenoid Shutoff, and Check Valve (51AF-4) ..... 51
Figure 5.14. X73 Aluminum Blanking Cap ..... 52

**Chapter 6—CONSTANT-PRESSURE HYDRANT FUELING SYSTEM, TYPE III (PHILLIPS)**

6.1. General Information ..... 53
6.2. Piping ..... 53
6.3. Receiving and Storage ..... 54
Figure 6.1. Type III, Constant-Pressure Hydrant Fueling System ..... 55
Figure 6.2. HLSO Valve (413AF-5A) ..... 56
6.4. Pumphouse ..... 57
Figure 6.3. Rate-of-Flow Nonsurge Check Valve (41AF-1A) ..... 57

Figure 6.4. F/S Control Valve (41AF-2C) ....58
Figure 6.5. ESO Valve (136AF-9B) ....59
Figure 6.6. HCV (362AF-8) ....60
Figure 6.7. BPCV (58AF-9) ....61
Figure 6.8. D/FV (58AF-9-1) ....62
Figure 6.9. PCV (58AF-3) ....63
6.5. Product Recovery System ....63
Figure 6.10. OV (2129AF) ....65
6.6. Sequence of Operations ....67
6.7. Leak Detection ....71
**Chapter 7—FUEL STORAGE TANKS**
7.1. General Information ....72
Figure 7.1. Air Force Standard Tank ....72
Figure 7.2. Water Draw-Off System ....73
Figure 7.3. Water Draw-Off System Detail ....74
7.2. Types of Tanks ....75
Figure 7.4. Floating Pan ....76
Figure 7.5. Floating Pan Detail ....76
Figure 7.6. Floating Pan Seal ....77
Figure 7.7. New Standard Tank Seal ....77
Figure 7.8. Automatic Float Gauge ....78
Figure 7.9. Automatic Float Gauge Head ....79
Figure 7.10. Automatic Float Gauge – Floating Pan ....80
Figure 7.11. Horizontal Cylindrical Tank ....81
7.3. Maintenance of Storage Tanks ....82
7.4. Pressure Vacuum Vents ....83
Figure 7.12. Pressure Vacuum Vent ....84
Figure 7.13. Belowground Tank Vent ....85
7.5. Diking ....85
**Chapter 8—SAFETY AND ENVIRONMENT**
8.1. General Safety ....87
8.2. Safety Precautions and Hazards of Liquid Petroleum Products ....88
8.3. First Aid ....89

8.4. Preventing Petroleum Fires ..... 90

**Chapter 9—ELECTRICAL GROUNDING AND BONDING**

9.1. General Information ..... 91

9.2. Static Charge Generation in Refueling Systems ..... 91

9.3. Preventing Static Electricity ..... 92

9.4. Relaxation (Release) of Electrostatic Energy ..... 92

9.5. Grounding or Bonding Procedures ..... 93

Figure 9.1. Aboveground Tank-Grounding Procedures ..... 94

Figure 9.2. Typical Method of Grounding Pier, Floating, and Barge Facilities ..... 95

Figure 9.3. Typical Method of Bonding Ladders on Floating Roof Tanks ..... 96

Figure 9.4. Truck Fill Stand and Unloading Area Grounding ..... 97

9.6. Electrical Currents ..... 98

9.7. Stray Currents ..... 99

9.8. Electrical Inspection, Testing, and Identification Procedures ..... 99

**Chapter 10—RECURRING MAINTENANCE**

10.1. General Information ..... 101

10.2. Responsibilities ..... 101

10.3. Recurring Maintenance and Inspections ..... 101

Table 10.1. Preventive Maintenance References ..... 102

**Chapter 11—ENTRY FOR INSPECTING, CLEANING, REPAIRING, AND COATING LIQUID PETROLEUM TANKS**

11.1. Introduction ..... 114

11.2. Standards ..... 114

11.3. TES Certification Requirements ..... 114

11.4. Tank Entry Personnel Requirements ..... 115

11.5. Confined Space Entry Requirements ..... 115

11.6. Tank Cleaning Crew ..... 115

11.7. Tank Entry Coordination ..... 117

11.8. Tank Entry Preparation ..... 117

11.9. Emptying the Tank ..... 118

11.10. Isolating the Tank ..... 118

11.11. Vapor Freeing ..... 118

11.12. Atmospheric Testing ..... 119

11.13. Initial Tank Cleaning from Outside the Tank ..... 120

11.14. Tank Entry ..... 120
11.15. Repairs ..... 121
11.16. Returning to Service ..... 122
11.17. Inactivation ..... 123
11.18. Tank Entry Equipment and Personnel Clothing ..... 123

**Chapter 12—CONTRACT WORK**

12.1. General Information ..... 128
12.2. Contract Requirements ..... 128
12.3. TES ..... 129
12.4. Air Force Forms Prescribed ..... 129

**Attachment 1—GLOSSARY OF REFERENCES AND SUPPORTING INFORMATION**

**Attachment 2—CAPACITY OF VERTICAL TANKS**

**Attachment 3—TEST PROCEDURE FOR SETTING THE PRESSURE DIFFERENTIAL CONTROL (CDHS-3)**

**Attachment 4—SUGGESTED VALVE TAGGING METHOD**

**Attachment 5—PROGRAMMING FUELS PROJECTS**

**Attachment 6—TANK IN-SERVICE INSPECTION CHECKLIST**

**Attachment 7—RELATED NATO STANAGs/APs/STUDIES – PETROLEUM HANDLING EQUIPMENT WORKING GROUP RESPONSIBILITY**

# Chapter 1

## SCOPE AND RESPONSIBILITY

**1.1. Purpose and Scope**. Clean, water-free fuel of the correct grade is essential to the safety of aircraft and the crews that fly them. This manual emphasizes preventive maintenance to avoid system shutdowns, prevent fuel contamination, and decrease fire, safety, and health hazards. Periodic inspections and servicing are essential to continue efficient safe operations and reduce major repairs.

1.1.1. This is not a design manual. Refer to Military Handbook (MIL-HDBK) 1022A, *Petroleum Fuel Facilities*, for current construction standards. MIL-HDBK-1022A cannot be used as the only justification to upgrade facilities. It also references standard designs for aboveground storage tanks and Type III and Type IV/V aircraft fueling systems. For related overseas designs contact your major command (MAJCOM) fuels engineer.

1.1.2. This manual applies to all real property facilities used for storing, distributing, and dispensing fuels for reciprocating and jet engine aircraft, unconventional fuels for jet thrust augmentation, liquid propellants for missiles or rockets, automotive fuels, aircraft lubricating oils, and military all-purpose diesel fuel. This manual does not cover mobile fueling equipment because it is not a base civil engineer (BCE) responsibility, nor does it include heating oil systems or power production fuel systems.

1.1.3. This manual establishes the minimum maintenance standards for fueling systems and applies to all active installations. If the installation is in an inactive or surplus status, reduce maintenance standards to a point consistent with the anticipated mission. If existing Department of Defense (DoD) directives are available with clearly outlined maintenance guidance, you will be referred to those publications. This will standardize maintenance requirements between the fuel system operators and the liquid fuels maintenance personnel and reduce revisions and administrative requirements.

1.1.4. All organizations must comply with Federal, state and local environmental regulations. Where conflicts occur, the more stringent regulations will apply. Oversea locations must comply with the final governing standards (FGS) for their respective country or this manual, whichever is more stringent.

1.1.5. Installations with a North American Treaty Organization (NATO) mission, including certain continental United States (CONUS) locations, must comply with applicable NATO Standardization Agreements (STANAG) (see Attachment 7).

**1.2. Organizational Responsibilities.**

1.2.1. Fuels Management Flight (FMF). The FMF ensures the safe and efficient receipt, storage, handling, issuing, and accounting of all petroleum products.

1.2.1.1. The FMF analyzes fuel quality throughout the system and is responsible for operational maintenance.

1.2.1.2. Operational maintenance is limited to external cleaning, lubrication of mechanical parts (excluding oiling of motors), cleaning strainers, and reporting deficiencies. Other maintenance performed by the FMF is outlined in Technical Order (T.O.) 37-1-1, *General Operation and Inspection of Installed Fuel Storage and Dispensing Systems*. This does not prevent the FMF and

the BCE from establishing a memorandum of agreement (MOA) to have operators perform minor maintenance within their capabilities.

1.2.1.3. FMF is responsible for draining roof drains and interior dike basins.

1.2.2. BCE Responsibilities. BCE maintains, repairs, and constructs real property, including petroleum storage and dispensing systems. Administrative requirements in Air Force Instruction (AFI) 32-1001, *Operations Management*, apply to this manual. Additionally, the BCE:

1.2.2.1. Maintains a complete and current file of as-built system drawings, detailed master plans, master-certified tank calibration charts, and military and commercial publications that apply to the system.

1.2.2.2. Keeps fire protection facilities in a constant state of readiness according to Air Force Occupational Safety and Health (AFOSH) Standard 91-56, *Fire Protection and Prevention*. Training, inspection, maintenance, and repair of fire protection facilities and equipment, including fixed suppression systems, fire extinguishers, blankets, and signs, are the responsibility of the base fire department.

1.2.2.3. Develops and submits project documentation (DD Form 1391**, Military Construction Project Data**) to the MAJCOM for transmittal (either directly or through the commander) to the Defense Energy Support Center (DESC). DESC is responsible for funding military construction (MILCON), maintenance, repair, and environmental (MRE) contract projects, and replacing equipment items relating to petroleum, oil, and lubricants (POL) systems within their area of responsibility. Recurring maintenance is not typically funded; however, in certain instances funds will be provided where poor fuel quality has caused equipment failure (see Attachment 5).

1.2.2.4. Designs contract projects for fueling systems primarily using architect-engineer (A-E) services. Because there are few engineers (in-house or A-E) experienced in designing fuel systems, bases must consult with the command fuels engineer before starting a project to verify that the proposed approach is feasible. There are many open-end A-E design and design-build contracts available with firms that specialize in DoD fueling systems. Contact the MAJCOM fuels engineer or the Air Force Civil Engineer Support Agency (AFCESA) for assistance.

1.2.3. LFM Responsibilities. The LFM shop has primary responsibility for maintaining and repairing facilities. Routine maintenance is covered in Chapter 10. The LFM shop should:

1.2.3.1. Conduct quality assurance inspections. LFM is responsible for all inspections, repairs, periodic maintenance, and modifications to petroleum systems under its jurisdiction, including inspection of work done by other BCE shops and by contractors. In dealing with contractors, it is not intended that LFM personnel replace the Air Force Contract Management Office (AFCMO); rather, they should be thoroughly aware of the project scope of work by reviewing project documents during the design phase, periodically observing contractor actions in the presence of the inspector, and participating in the final inspection. Contract discrepancies should be brought to the attention of the contract officer. Care must be exercised to avoid obligating the government either through perceived changes to the contract or delays to the contractor.

1.2.3.2. Aid engineering and FMF in preparing and maintaining flow diagrams and schematics for all systems, and developing the sequence of operations for the systems.

1.2.3.3. Ensure that as-built drawings are current and include changes made to the system either by contract or in-house.

1.2.3.4. Provide and calibrate permanently installed meters (BCE may delegate meter calibration to the motor vehicle maintenance shop when this is advantageous to the Air Force) and schedule meter calibration with the FMF.

1.2.3.5. Ensure all valves are identified both on the charts and on the valve itself by tagging (see Attachment 4). Valve identification is a joint responsibility between LFM and FMF.

1.2.3.6. Provide technical experts to serve as the MAJCOM fuels engineer's designated representative. Duties include:

1.2.3.6.1. Aiding contract management to ensure work on fuel systems conforms to the applicable regulations and meets the job requirements.

1.2.3.6.2. Recommending approval/disapproval of contract work.

1.2.3.6.3. Overseeing tank cleaning operations.

1.2.3.7. Enforce these mandatory procedures:

1.2.3.7.1. Notify the FMF Resource Control Center (RCC) before removal of a system component or when the system is opened in a manner that may result in a fuel spill.

1.2.3.7.2. Mechanically close off open fuel lines (blind flange, pipe caps, tube fittings) when any system component is removed or altered and left unattended. Except for double block and bleed (DBB) valves, a closed valve upstream that is locked or tagged is not considered a positive shutoff and will not substitute for this requirement. When flanges are used to secure the system, all bolts must be installed. ***NOTE:*** The individual who physically removes a component or alters the system is responsible for mechanically closing off open fuel lines prior to leaving the area, so ensuring the integrity of the fueling system. When removing components from any system that remains packed with fuel, provide an alternate means of thermal pressure/vacuum relief if needed. If alternate means are not available, then drain the system until the work is complete. Depending on the volume, 1 °F can cause a pressure change of 75 pounds per square inch (psi) inside a container or pipe.

1.2.3.8. Provide coordination and technical advice to the FMF on proper operation and maintenance (O&M) of the fuel system.

1.2.3.9. Maintain direct server access at the shop, including e-mail and full internet capabilities.

1.2.3.10. Maintain the following records within the shop:

1.2.3.10.1. Facility files. Include copies of completed AF Form 1024**, Confined Spaces Entry Permit**, AF Form 172, **Tank Inspection Summary**, hot work permits, strapping charts, waivers, and hose hydrostatic test records.

1.2.3.10.2. Personnel files (health records, respirator fit-test record, training records).

1.2.3.10.3. O&M manuals.

1.2.3.10.4. Current system schematics and as-built drawings.

1.2.3.10.5. Regulations and manuals (Occupational Safety and Health Administration [OSHA], AFOSH, American Petroleum Institute Standards [API Std], MIL-HDBK-1022A).

1.2.3.10.6. Recurring work program (RWP).

1.2.3.10.7. Contractor inspection records (e.g., API 570, *Piping Inspection Code: Inspecting, Repair, Alteration, and Rerating of In-Service Piping Systems,* API Std 653, *Tank Inspection, Repair, Alteration, and Reconstruction,* and leak detection reports).

1.2.3.10.8. MAJCOM infrastructure assessment reports.

1.2.3.10.9. Inspection schedules and cathodic protection records.

1.2.4. DESC Responsibilities.

1.2.4.1. DESC manages and funds projects that:

1.2.4.1.1. Directly support the Defense Logistics Agency (DLA) bulk petroleum management mission. Only fixed permanent facilities are eligible. (Contingency facilities do not typically meet these criteria.)

1.2.4.1.2. Either store or distribute DESC product.

1.2.4.1.3. Ensure environmental compliance.

1.2.4.1.4. Protect DESC product from loss or contamination.

1.2.4.1.5. Are of economic benefit to DESC.

1.2.4.1.6. Are directed by DESC, or are necessary to meet minimum inventory level requirements.

1.2.4.2. MILCON Program. DLA and DESC manage the fuels MILCON program (see Attachment 5).

1.2.4.3. DESC manages and funds the MRE program. This program is similar to the O&M program familiar to base-level personnel.

1.2.5. Valve References. Throughout this manual there will be references to automatic valves using Cla-Val model numbers because the majority of Air Force fueling systems are controlled using Cla-Val components. It has also become common practice to refer to valves and pilot valves by the Cla-Val designations, even those provided by other manufacturers. This is not an endorsement of one company over another; rather, it is an expedient to make this manual understandable to the most people. At installations with valves made by other companies, follow the manufacturers' procedures.

# Chapter 2

# PIPELINE SYSTEMS

**2.1. On-Base Pipelines.** On-base pipelines are used to fill base fuel storage tanks, withdraw fuel from base storage tanks, fill trucks, transfer fuel between base storage and operating storage tanks, and fill aircraft from hydrant operating storage tanks and dispensing systems.

2.1.1. Commercial Pipelines. Commercial pipelines deliver fuel to the base fuel storage tanks. These pipelines are usually underground except at tie-in connections to the base pipelines. These pipelines are constructed on government property by issuing real estate easements. Typically, cross-country pipelines are owned, operated, and maintained by civilian agencies. When a pipeline system is under contract to a civilian agency, civilian responsibility for maintaining the pipeline usually terminates at some point near where the pipeline enters the base. From this point to the bulk fuel storage area, the responsibility for maintenance is assigned to the BCE. The BCE is authorized to perform emergency maintenance on on-base commercial pipelines, if necessary, to protect against environmental damage to public property or meet emergency wartime mission requirements. The real estate easement agreement with the pipeline owner takes note of this and provides for suitable contractor reimbursement to the government. Government-owned or -leased cross-country pipeline systems and marine facilities are in common use in oversea areas. In some areas Air Force personnel maintain these systems.

2.1.2. Bulk Fuel Storage Facility Pipelines. Petroleum fuels may be supplied to bulk fuel storage tanks by inter-terminal pipelines that may be dedicated to serving the particular facility or may be commercial pipelines handling several types or grades of fuel for more than one user. In some cases, the pipeline will be an installation pipeline. Where more than one type of fuel is received or unloaded, separate pipelines and unloading facilities are typically provided for each type of fuel**.**

2.1.3. Transfer Pipelines. These pipelines carry fuel between base storage, transfer pumphouses, and truck fill stands or hydrant systems. Typically, these pipelines are underground except in the immediate area of the facility involved. Most facilities have separate issue and receipt lines; however, some facilities use a single line for both.

**2.2. Operating On-Base Petroleum Systems.** The FMF is responsible for operating on-base petroleum systems, according to AFI 23-201, *Fuels Management*, and T.O. 37-1-1. The BCE provides the FMF with a current on-base pipeline capacity (in U.S. gallons).

**2.3. Maintenance of On-Base Pipelines.**

2.3.1. Inspecting Aboveground Piping. Visually inspect for leaks or drips at the same time that other maintenance tasks are performed in these areas. Leaks in an aboveground pipeline require welding for permanent repair (see API Recommended Practice [RP] 1107, *Pipeline Maintenance and Welding Practices*). Approvals from the MAJCOM fuels engineer, base safety, base environmental engineer, and the base fire department are required before beginning welding or hot work in connection with repairs.

2.3.2. Inspecting Underground Piping. All LFM personnel should be aware of the various underground pipeline routes and make a general visual surveillance when driving by or working in these areas. The pipeline should be walked at least once a year. Leaks in underground pipelines can sometimes be detected by fuel surfacing on the ground, fuel runoff in the storm drainage system, fuel in underground pits or manholes, dead vegetation, or the continuous odor of fuel in a particular area. Investigate any suspicious circumstances. Consult the base environmental coordinator for guidance before excavating the soil. Periodic documented cathodic protection surveys should be accomplished in accordance with AFI 32-1054, *Corrosion Control*.

2.3.3. Pipeline Testing. Pipelines must be tested annually for leaks. The MAJCOM fuels engineer may authorize an equivalent methodology as long as state environmental requirements are met. Pressure tests are affected by weather, so it is best to do them in the spring or fall when fuel, ground, and air temperatures are similar. An overcast day or early in the morning would be preferable to lessen the solar effects on aboveground lines. Maintain all leak test records in the LFM shop for five years unless environmental requirements dictate longer. Send copies of these records to the MAJCOM fuels engineer if requested. Use the following testing approach unless state requirements are more stringent:

2.3.3.1. Annual Pressure Testing. Pressure-test all on-base fuel piping systems annually using existing system pumps. Pressurize unloading, loading, transfer, and hydrant dispensing piping systems by running the appropriate pumps against a closed system until deadhead pressure is reached. Close appropriate valves to trap this pressure in the system, then turn off the pumps. ***NOTE:*** Some ball valves do not provide isolation and require a differential pressure (DP) to seat, so blind flanges may be required. Take pressure gauge readings within fifteen minutes after allowing sufficient time for the fuel pressure to stabilize. Visually check all aboveground piping and piping in concrete pits for leaks. Audibly check closed valves for sound as evidence of an internal valve leak. If no visible or audible leaks occur, then take pressure gauge readings every fifteen minutes for the first hour, and once every half-hour for the next hour. Total time for the pressure test will be two hours. Document all pressure tests by recording the following:

2.3.3.1.1. Name of system test (i.e., refuel header, defuel header, lateral pipelines). Provide facility number.

2.3.3.1.2. Date of test and weather conditions (e.g., sunny and 27 °C [80 °F]; cloudy and 18 °C [64 °F]). ***NOTE:*** Record any weather change during the test period.

2.3.3.1.3. Pressure readings:

2.3.3.1.3.1. Start (approximate local time) pressure.

2.3.3.1.3.2. Fifteen minutes (approximate local time) pressure.

2.3.3.1.3.3. Thirty minutes (approximate local time) pressure.

2.3.3.1.3.4. Forty-five minutes (approximate local time) pressure.

2.3.3.1.3.5. One hour (approximate local time) pressure.

2.3.3.1.3.6. One and one-half hours (approximate local time) pressure.

2.3.3.1.3.7. Two hours (approximate local time) pressure.

2.3.3.2. Five-Year Hydrostatic Test. Perform a hydrostatic pressure test every five years on all underground fuel transfer pipelines (product is typically the test media for this test). The MAJCOM fuels engineer sets the specific year. A hand-operated hydraulic pump, or equivalent,

with a built-in reservoir tank supplies hydrostatic pressure. This takes the place of the annual pressure test. The hydrostatic test may be conducted using a dual-pressure, temperature-compensating pressure test conducted at the same pressure specified in paragraph 2.3.3.2.2 with MAJCOM fuels engineer approval. The test vendor must have an independent third-party review of the test.

2.3.3.2.1. To test the pipe, first isolate the section being tested with blind or spectacle flanges. If DBB valves will hold the pressure, blind flanging is not required. ***NOTE:*** filter/separators (F/Ss), thermal relief valves, safety valves, and sight glasses may have to be removed or isolated by blind/skillets.

2.3.3.2.2. Using a hand-operated hydrostatic pump, perform a static pressure test to the lesser of 1.5 times the system dead head pressure or 1.896 megapascals (275 pounds per square inch gauge) maximum. Use fuel to perform all tests. Pressure may also be applied with a dead-weight tester or suitable motor-driven pump.

2.3.3.2.3. Once the pressure is stabilized, record the pressure every 15 minutes for the first hour, every 30 minutes the second hour, then every hour thereafter. If at the end of the minimum four-hour test (the longest test possible is recommended—preferably overnight) no leaks are found, further testing is not required. (Use the procedure described in paragraph 2.3.3.1.) If a leak or excessive pressure change is observed, perform a flow test by repressurizing the line with the hydrostatic pump. Measure and record the amount of fluid required to maintain this pressure for four hours. If a leak is found, contact the environmental flight and take action to repair it. Also, promptly notify the command fuels engineer and DESC if additional funding is required for repairs, leak detection, and or location. A drop in pressure could be the result of a decrease in product temperature or absorption by the product of air in the line. To rule this out, you may repressurize the line and extend the test period to at least 24 hours.

**2.4. Off-Base Pipeline Systems.** Off-base pipelines are used to transfer petroleum products from refineries to air bases, terminals, and points of distribution. They are typically owned, operated, and maintained by civilian contractors (except for government-owned or -leased pipeline systems) and will vary in size, construction, and operation. Additional factors influencing the operation and type of system are terrain features (underwater, aboveground, belowground, road and railway crossing, expansion joints) and age. Pipeline receiving facilities are typically near the base fuel storage area. These facilities should include an isolation pit, pressure reducing valve and, when used, a pig receiving facility. The Department of Transportation (DoT) regulates pipelines following Title 49, Code of Federal Regulations (CFR), Part 195, *Transportation of Hazardous Liquids by Pipeline*, current edition. The following subparagraphs will give a general description of these types of pipelines and O&M procedures that apply to most systems.

2.4.1. Cross-Country Pipelines. Cross-country pipelines are often of the multi-product type. The system consists of one pipeline and a series of pumping stations. The pumping stations have pumps, strainers, pressure regulators, valves, scraper sand traps, and a sump tank to collect sludge and debris. The number of pumping stations in the cross-country system depends on terrain conditions and the distance the fuel must be transferred.

2.4.2. Off-Base Pipeline Construction. Pipelines are typically constructed of 12.1-meter (40-foot) long steel pipes welded together and installed aboveground or underground. Pipe diameter varies from 101 to 355 millimeters (4 to 14 inches), depending on system capacity. For a more complete

understanding of the design and construction of pipelines, see MIL-HDBK-1022A, API RP 1102, *Steel Pipelines Crossing Railroads and Highways*, and API Std 1104, *Welding of Pipelines and Related Facilities*.

2.4.3. Operations. In an emergency and at oversea commands, Air Force personnel may be required to take over, operate, and maintain a cross-country pipeline system. The command fuels engineer will provide technical oversight to the BCE responsible for all maintenance of pipelines acquired by the Air Force. Before operating a pipeline, the command fuels engineer or his delegated representative should consider the following:

2.4.3.1. Secure all plans, system diagrams, and information possible to find the location and function of all components (especially valves) in the system. Some installations may require a complete engineering study to secure sufficient information for O&M.

2.4.3.2. Reports should be made to decide the necessary manpower for each installation. Personnel selected should have experience in the type of equipment they will operate. Skilled engineers, electricians, mechanics, and pump operators are usually required at each pumping station.

2.4.3.3. Inspect all equipment in the pipeline system to ensure proper working condition. Failure at one pumping station can cause a complete shutdown of the entire pipeline.

2.4.4. Off-Base Piping System Inspections:

2.4.4.1. Leak Detection. Pressure checks, volume checks, line patrols, and leak detection apparatuses may be used to detect leaks.

2.4.4.2. Pressure Checks. Pressure-check off-base piping systems annually in the same way prescribed for on-base piping systems (see paragraph 2.3.3.1). Hydrostatically test new piping systems in accordance with API RP 1110, *Pressure Testing of Liquid Petroleum Pipelines*. Hydrostatically test systems to the lesser of 1.5 times the operating pressure or 1.896 megapascals (275 pounds per square inch gauge) maximum. During testing, disconnect system components such as storage tanks or equipment that were not designed for the piping test pressure or protect them against damage by over-pressure.

2.4.4.3. Volume Checks. Continuous records are kept on volume and temperature of liquid passed through each pumping station. A difference in meter reading that cannot be accounted for by temperature corrections between two stations usually indicates a leak, but could also indicate theft, out-of-calibration meters, faulty temperature sensors, or human error.

2.4.4.4. Line Patrols. Inspections are made by line walkers, vehicles, and light aircraft. Air patrols should be flown not less than once every three weeks at an elevation of less than 152 meters (500 feet) from the ground and at speeds from 104 to 128 kilometers per hour (65 to 80 miles per hour). The pipeline should be marked with posts or signs at 1.6-kilometer (1-mile) intervals and at bends. The pilot acts as an observer who checks for unnatural changes in vegetation color and oil slicks on lakes and streams which are evidence of leaking pipelines; area construction work (e.g., roads, sewers) that could cross and possibly damage the pipeline; and the overall condition of the right-of-way. Line walkers or vehicle patrols make detailed inspections once a year of the entire pipeline, checking the general condition of the right-of-way, valves in remote areas, supports on aboveground pipelines, and any condition that may indicate a leak.

2.4.4.5. Leak Detection Apparatus. Various types of leak detection apparatus are used by civilian contractors. Vapor or electronic devices are some of the more common types.

2.4.4.6. API 570 Inspections. Besides routine pipeline inspections, periodic inspections by an expert certified to the standards of API 570 will provide documentation of remaining pipeline life and any need for replacement. This may be funded by DESC.

## 2.5. General Pipeline System Components.

2.5.1. Expansion Joints. Pipelines are arranged to allow for expansion and contraction caused by changes in ambient temperature. Where possible, accommodate expansion and contraction by changes the direction of piping runs, offsets, loops, or bends. When this is not practicable, use flexible ball joint offsets. Do not use expansion devices that use packings, slip joints, friction fits, or other non-fire-resistant arrangements. Ball-type offset joints are used to accommodate possible settling of heavy structures such as storage tanks if piping design cannot provide enough flexibility. Expansion bends, loops, and offsets are designed within stress limitations of American Society of Mechanical Engineers (ASME) B31.3, *Process Piping*, and ASME B31.4, *Liquid Transportation Systems for Hydrocarbons, Liquid Petroleum Gas, Anhydrous Ammonia, and Alcohols*.

2.5.2. Manual Valves. Manual valves are used on pipelines to control flow and to permit isolating equipment for maintenance or repair.

2.5.2.1. Full port valves are installed on pipelines to allow pigging.

2.5.2.2. Do not use gate valves in aircraft fueling systems, except where the pipeline is pigable and absolute shut-off is not required.

2.5.2.3. For specific valve types and locations, see MIL-HDBK-1022A.

2.5.3. Surge Suppressors. If the flow of liquid in a pipeline is suddenly stopped, an excessively high pressure is instantly created because the kinetic energy of flow is converted to pressure energy. The resulting shock often causes leaks and damage to connected equipment. A common device designed to decrease shock in pipelines is a surge suppressor of the diaphragm or bladder type. It is equipped with a top-mounted liquid-filled pressure gauge, isolation valve, limited bleed-back check valve, and drains. The surge suppressor will be as close as possible to the point of shutoff that is expected to cause the shock. Surge suppressors can reduce shock pressure but will not end it entirely.

2.5.4. Miscellaneous. Miscellaneous equipment found in pumping stations include control panels, gauges, fire-fighting equipment, water detectors, sump pumps, compressed air systems, and electronic measuring devices. These components vary with the type of system and are considered accessory equipment for the major components of the system.

## 2.6. General Pipeline System Repairs.

2.6.1. General Pipeline Leaks. Most pipeline leaks are caused by interior or exterior corrosion. Less frequent causes of leaks include cracked welds, split seams and joints, separation at collars, buried flanges, and threaded pipe. Initial repairs can be made by placing clamps over the damaged area and using sealing epoxy components or gaskets to seal the leak. These repairs are usually temporary and modern practice is to weld all leaks (API RP 1107). The LFM should make sure that schematics are annotated to show where major breaks and leaks have occurred in the pipeline.

2.6.2. Pits and Small Leaks. Pits on the exterior of a pipeline are caused by corrosion. If discovered before a leak develops, repair them by arc welding. Welding a circular patch over the hole may repair small leaks.

2.6.3. Large Punctures and Holes. Large holes in pipelines usually create a welding safety hazard because of the spills that have saturated the ground. Clamping a steel plate of the same curvature as the pipe over the damaged area, using petroleum-resistant rubber for a seal, makes temporary line repairs; the area may then be cleared of all hazards. The steel plate clamped over the leak can be permanently welded to the pipe. For most welding operations, the pipeline can stay in service during repairs; however, if there is danger of the arc penetrating the pipe (thin wall or badly corroded pipe), the system should be shut down during repairs. All hot work must be approved by the command fuels engineer, base safety, base bioenvironmental engineer, and base fire department.

**2.7. Major Repairs.** Major repairs involving several sections of pipe can be done by two methods:

2.7.1. If the pipeline can be taken out of service, replace the damaged section with new pipe.

2.7.2. If the pipeline cannot be taken out of service, a casing can be welded over the damaged sections. Casings are considered temporary and should be used only under extreme conditions.

**2.8. Pipeline Cleaning.** Pipelines are cleaned with line scrapers forced through the line by the liquid being pumped. Intervals between cleanings vary with the size of the pipe and the type of liquid. A drop in the flow rate, the continual presence of dirt, rust, or particulate in basket strainers, and or shortened filter life may indicate a need for cleaning. Batching pigs are used to separate fuels and prevent contamination. Treatment of batching pigs is the same as for line scrapers. Water slugs are not permitted to separate batches.

2.8.1. Scraper Operation. Decide on the scraper best suited for the operation. Check specifications to be sure it will pass through all valves and bends. Keep accurate records of the time the scraper is started and quantity of fuel pumped to trace the progress of the scraper and find the time of its arrival at the receiving station. It is good practice to bypass meters while scraper sediment is in the line. The scraper should be run at the minimum velocity (3.2 kilometers per hour [two miles per hour]) with no shutdowns while the scraper is in the line. Shutdowns will permit the scrapings to settle in front of the scraper, causing it to become stuck (this usually requires cutting the line to retrieve it).

2.8.2. Scraper Tracing. Several methods are used to find scrapers stuck in lines. The knife-type scrapers make sufficient noise to be followed by line walkers. Brush-type scrapers are relatively silent and require a transmitting device to reveal their exact location. Their general location can be found from the time and quantity of fuel pumped before the stoppage occurred. Special devices include:

2.8.2.1 Noisemakers fastened to the scraper.

2.8.2.2 Directional antennas.

2.8.2.3. Radioactive material that can be found with a Geiger counter.

2.8.2.4. Magnetized core in the scraper that can be detected with a magnetometer.

# Chapter 3

# MECHANICAL SYSTEMS

**3.1. General Information.** This chapter covers receiving, offloading, fill stand, pipelines, and gas station facilities. The components common to each of these systems, as well as the components specific for each system, are described in this chapter. These facilities must have an appropriate system to contain spills. Contact the base environmental coordinator for applicable environmental requirements and refer to MIL-HDBK-1022A for design criteria. Typical applications include direct offloading systems and stripper pumps.

**3.2. Pumps.** In mechanical systems**,** pumps are used for unloading, transferring, and dispensing fuels. There are several types of pumps used in fueling systems.

3.2.1. Rotary positive displacement pumps (Figure 3.1) or self–priming centrifugal pumps are used where suction lifts are high or where the pump may frequently lose prime. These pumps must have an internal pressure relief or a pressure relief must be installed on the downstream side. Positive displacement pumps will not be used as product issue or transfer pumps.

**Figure 3.1. Rotary Vane Pump.**

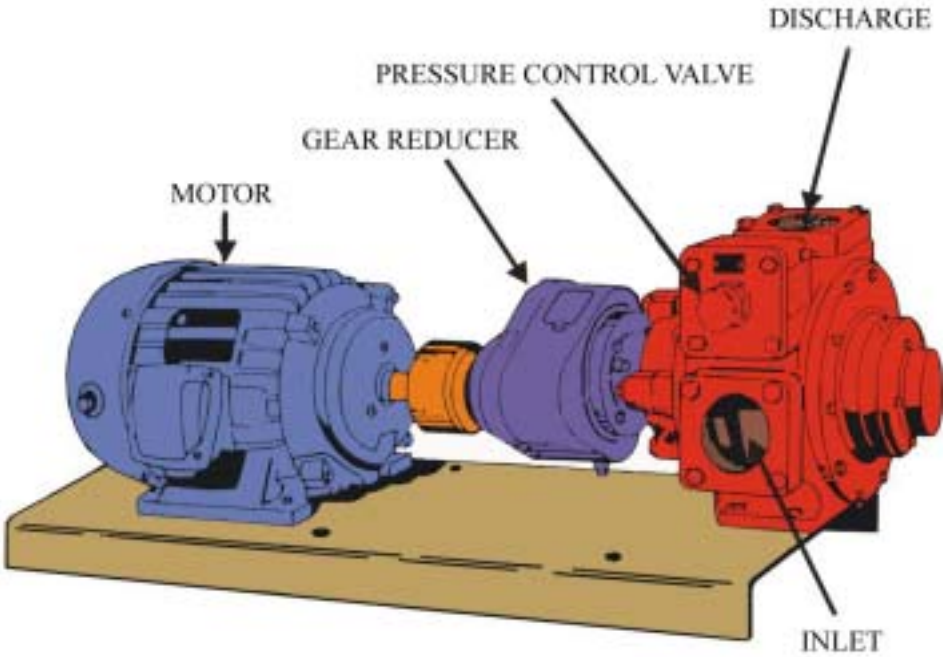

3.2.2. Horizontal split-case centrifugal or turbine pumps (Figures 3.2 and 3.3) are used as transfer pumps on aboveground tanks and installed in a position that creates positive or flooded suction. Vertical turbine pumps are used to pump from underground or cut-and-cover tanks. A "can" pump is another type of vertical turbine pump.

**Figure 3.2. Horizontal Split-Case Pump.**

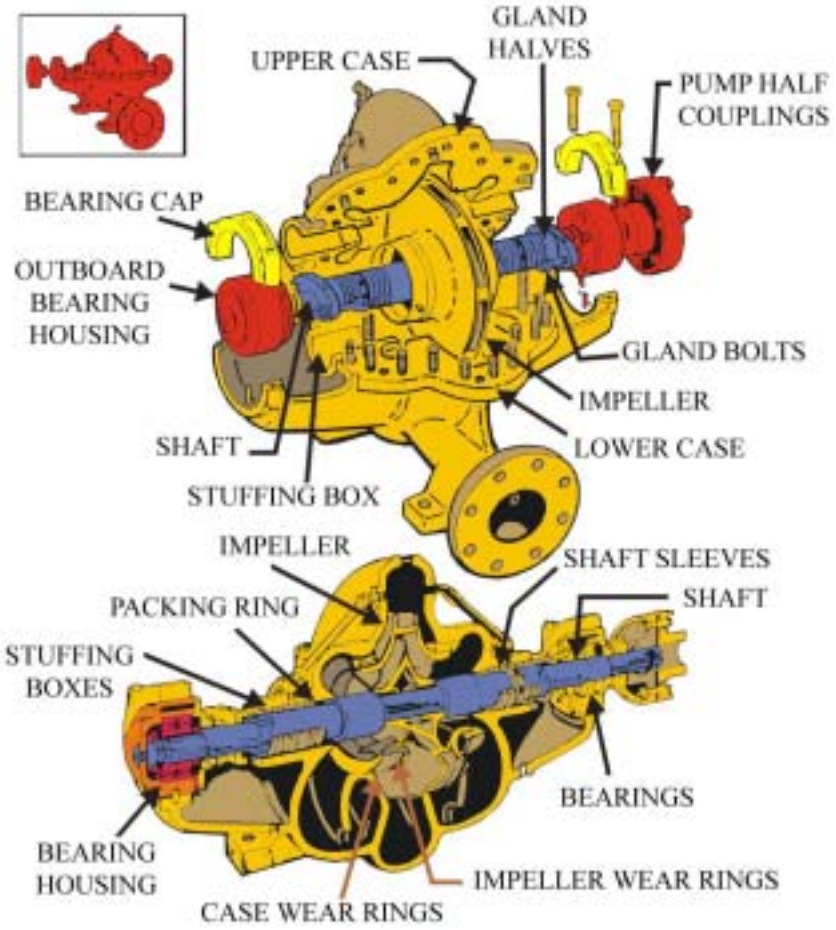

**Figure 3.3. Vertical Deepwell Turbine Pump.**

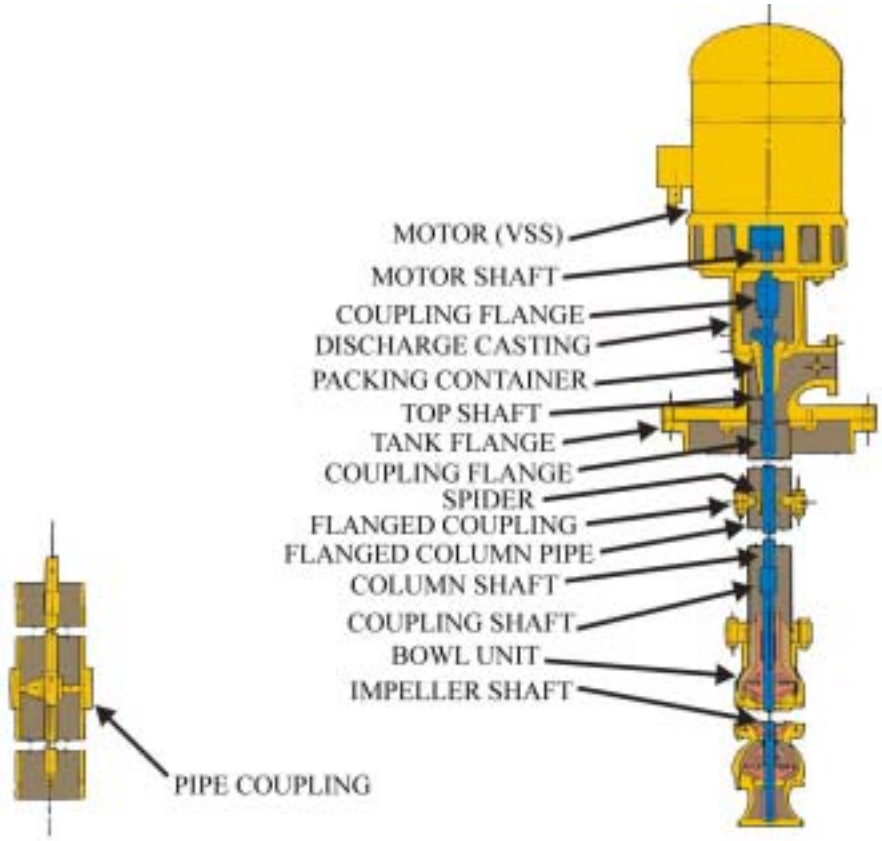


3.2.3. For new pump installations, use API Std 610, *Centrifugal Pumps for Petroleum, Heavy Duty Chemical, and Gas Industry Service*, centrifugal pumps and vertical turbine pumps. Contact your MAJCOM fuels engineer for additional information as there are many types and configurations of API Std 610 pumps. Figures 3.2 and 3.3 show two types of pumps used as transfer pumps.

3.2.4. A hydraulic gradient (Figure 3.4) is usually used in the design of a pumping and piping system to help in properly sizing lines and selecting pumps to deliver a given amount of fuel in a certain time. An example of a hydraulic gradient for a given system is shown in Figure 3.4. In this sample, fuel is pumped from an aboveground storage tank to two truck fill stands simultaneously, at the rate of 946 liters per minute (250 gallons per minute) to each. The centerline of the tank outlet is 0.91 meter (3 feet) above the eye of the pump. Minimum desirable elevation of the liquid is taken as the line friction loss of 4.22 meters (13.84 feet) to the elevation of the pump, or 2.13 meters (7 feet). The pump raises the head to 18.29 meters (60 feet). The friction loss in the 102-millimeter line to the connection to the two fill stands drops the elevation to 14.31 meters (46.98 feet). The drop at 946 liters per minute (250 gallons per minute) in each piping system to the truck fill stands drops the elevation to 12.16 meters (39.9 feet). The elevation of the truck fill stand is 7.01 meters (23 feet). The difference in head (12.16 meters – 7.01 meters = 5.15 meters [16.9 feet]) is the head available for delivering fuel.

**Figure 3.4. Hydraulic Gradient.**

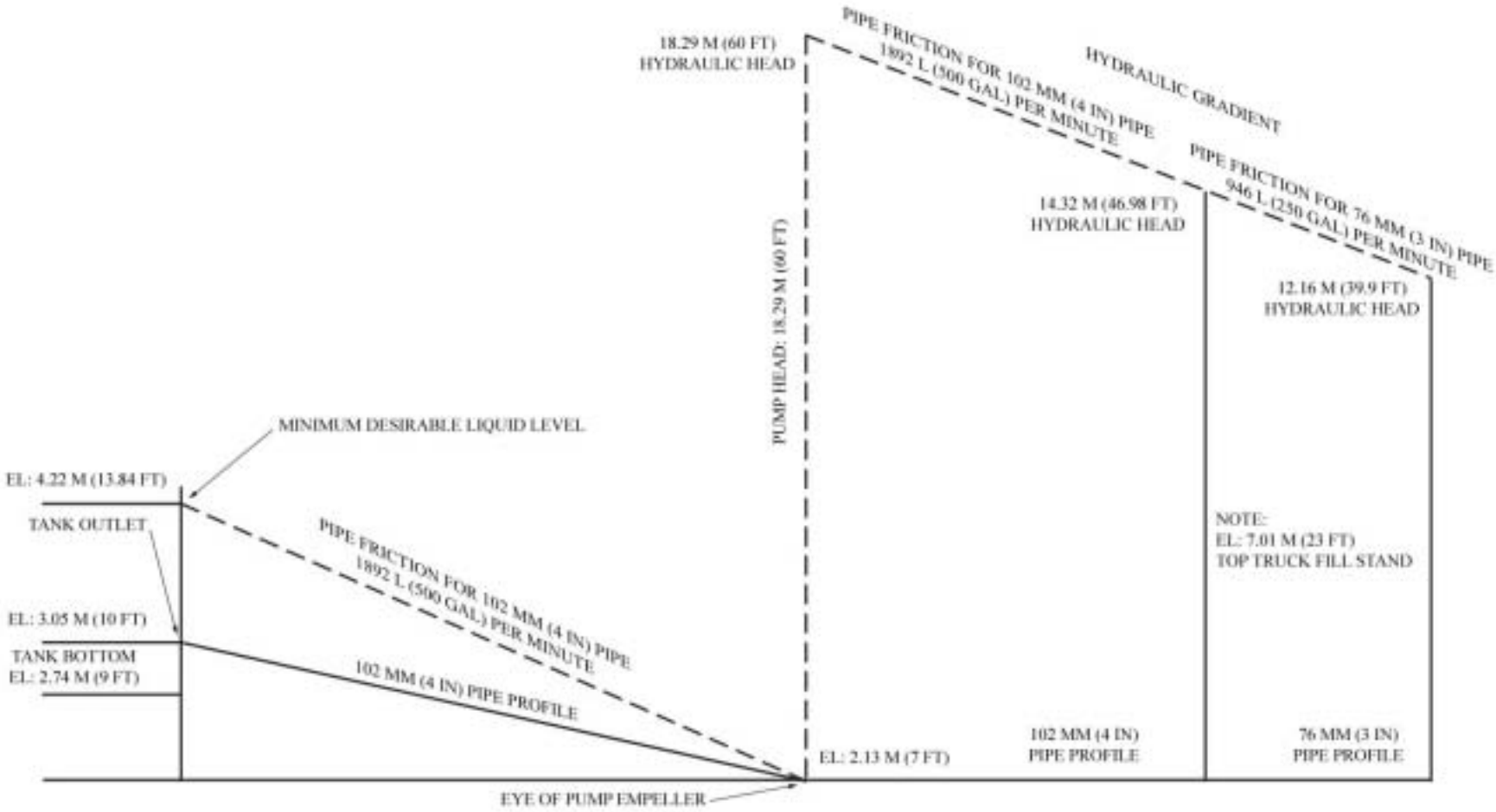

**3.3. Filter/Separators (F/S).** F/Ss remove undissolved (free) water and solids from petroleum products. Very fine water particles pass through coalescer filter elements and grow in size (coalesce) into larger droplets that collect on a second-stage Teflon screen or treated paper elements and fall to the bottom of the F/S vessel. The solids in the fuel are trapped in the elements and build up a DP across the F/S. Water accumulated in the bottom of the F/S is typically removed manually. ***NOTE:*** Because of environmental problems caused from valve failure, the automatic drain feature originally installed with pre-1994 systems has been disabled, except for certain receipt F/Ss from barges or pipelines with histories of excessive water. F/Ss are equipped with the means to measure DP to find when elements should be changed and a sampling port in the outlet pipe to verify fuel quality. Element change criteria are outlined in paragraph 10.12.1. The piston-type DP gauge is preferred for fueling systems. Replace individual gauges with the piston-type as soon as practicable.

3.3.1. F/S Important Notes:

3.3.1.1. All F/Ss should be modified to accept the new API coalescer elements, or replaced with API F/Ss.

3.3.1.2. Heaters are no longer necessary in F/Ss handling military jet fuel because the fuel contains a fuel system icing inhibitor (FSII).

3.3.1.3. Where possible, move the sight-glass bottom connection to the bottom of the sump to show the entire water content and equip the system with a density ball.

3.3.1.4. All F/S vessels require pressure relief protection.

3.3.1.5. Remove the automatic water drain option at the first opportunity, unless on a receipt vessel that must handle excessive water, or if waived by the MAJCOM fuels engineer.

3.3.1.6. Pressure relief protection should be full ported; no reduction in pipe size is allowed.

3.3.2. Specifications and Qualification Procedures. New F/Ss should be qualified to the current edition of API Publication (Pub) 1581, *Specifications and Qualification Procedures for Aviation Jet Fuel Filter/Separators*, tested to either Category M or M100 requirements. Category M F/Ss are qualified using JP-8 with an additive package. Category M100 F/Ss, coalescer/separators, and multi-stage systems are qualified using JP-8 with an additive package that also includes dispersant additives such as those that enhance thermal stability. Category M100 F/Ss qualify for Category M F/S at the same flow rate and conditions. Type S F/Ss can be used at filtration points where significant levels of water and dirt in the product can be expected, such as a receipt F/S. Type S-LD F/Ss (also known as coalescer/separators) can be used at all filtration points where significant levels of water but minimal amounts of dirt can be expected in jet fuel (i.e., following a micro-filter). A Type S F/S qualifies as a Type S-LD for the same category at the same flow rate and condition.

3.3.3. Element Replacement for a Vertical F/S:

3.3.3.1. Drain the F/S completely.

3.3.3.2. Raise the cover. **CAUTION:** Do not touch the new filter elements or the separator canisters with your bare hand. The oil on your hand will cause damage to the water-removal capability of these components.

3.3.3.2.1. Where there is an outer canister, remove, clean (paragraph 3.3.5.1.), and set it aside for reuse.

3.3.3.2.2. Remove and discard the old elements in an approved manner. Coordinate disposal of elements with base environmental engineering.

3.3.3.3. Check the adapter gasket and adapter to make sure the gasket and adapter threads are clean.

3.3.3.4. Complete the installation of the F/S cartridge assemblies by lowering each of the filter element assemblies onto one of the deck plate nipples. Make sure that each of the element assemblies is screwed down onto its deck plate nipple and the gasket is seated properly and seals tightly. Next, apply the procedures in paragraphs 3.3.3.4.1. through 3.3.3.4.6. below:

3.3.3.4.1. Replace the cover gasket with a new gasket of the same grade and manufacture as the old one.

3.3.3.4.2. Swing the cover back into place, lowering the lifting handle as you do so.

3.3.3.4.3. Swing the eyebolts up into place and tighten the nuts using the criss-cross method. Do this so that the cover gasket and cover are seated properly. When tightening cover bolts and nuts, use a torque wrench. Tighten nuts just enough to prevent leaking through the dome cover seal (refer to manufacturer's instructions for torque requirements) and to eliminate possible damage to the vessel.

3.3.3.4.4. Close the manual water drain valve.

3.3.3.4.5. Slowly fill the separator.

3.3.3.4.6. Pressurize the vessel to inspect all gaskets and screwed connections for leaks; tighten all loose connections.

3.3.3.5. ***NOTE:*** Remember, once a system is opened for any reason it must be sampled before the aircraft is serviced.

3.3.3.6. Notify the FMF that the F/S is ready to be put back into service and is awaiting QC flushing and sampling. (This is necessary to ensure the fuel meets quality requirements.)

3.3.3.7. After the cartridges (elements) have been replaced and the F/S is ready to put back into service, follow the steps below:

3.3.3.7.1. Data decals are provided with new elements. Cut off the bottom portion of the manufacturer's decal under the words "Element Change Criteria" and attach *only* the *upper* portion of the decal. This shows the element part number and national stock number (NSN) for the F/S vessel.

3.3.3.7.2. Record on the F/S the next change date (month and year) and the maximum allowable DP. Make sure the information is highly visible.

3.3.3.7.3. Set up and keep a logbook or wall chart in the LFM shop. Record the following information in this book or chart: pumphouse facility number; F/S number; month and year replacement cartridges were installed; NSN of the cartridge; number of elements; manufacturer's cartridge; and lot number, if available.

3.3.4. Element Replacement for a Horizontal F/S:

3.3.4.1. After the vessel has been drained thoroughly, remove the head flange bolts and open the vessel. For the original KMU-416/F modification kit, use the following method:

3.3.4.1.1. Starting with the bottom (left) cartridge, loosen the 12.7-millimeter (0.5-inch) nut on the adapter mounting rod. Slowly drain the fuel trapped in the manifold by loosening the bottom element (cartridge).

3.3.4.1.2. After the fuel has been drained from the manifold, remove the fifteen elements on the outlet side of the manifold.

3.3.4.1.3. To remove the cartridge hold-down plate, use a screwdriver for leverage to pry the seals outward from the elements. The O-ring seals on the element mounts may be removed more easily by applying a slight twisting motion instead of a direct pull.

3.3.4.1.4. Loosen and remove the victaulic coupling from the inlet pipe, sliding the sealing gasket down on the manifold pipe section. Be sure to use a static bonding wire.

3.3.4.1.5. Remove the manifold. This requires two people to slide the manifold forward, using the protruding element hold-down rods as handles to help in removing the manifold. **CAUTION:** Have a container available to place the manifold in and catch any fuel that might spill out of the manifold. Dispose of the used cartridges (filter elements) in an approved manner. Do not allow fuel-soaked cartridges to be left in the area or disposed of in a manner that can create a safety or fire hazard. Be careful when handling used cartridges because they are toxic and combustible or flammable, depending on the fuel's flashpoint.

3.3.4.1.6. Remove the second-stage element and follow the steps outlined in paragraph 3.3.5. below when cleaning.

3.3.4.1.7. Clean the inside of the F/S with rags.

3.3.4.1.8. Replace elements on the manifold and reinstall the manifold.

3.3.4.1.9. Align and bolt in the victaulic coupling.

3.3.4.1.10. Replace cover and tighten bolts using the criss-cross method. Tighten nuts just enough to prevent leaking through the dome cover seal (refer to manufacturer's instructions for torque requirements) to eliminate possible damage to the vessel.

3.3.4.2. For modified KMU-416/F (1135 liters per minute [300 gallons per minute]) kits with nine additional elements on the back side of the manifold, remove only the bottom front six elements instead of all fifteen elements. This will balance the manifold, and it may more easily be removed. Remove the manifold from the vessel.

3.3.4.3. For KMU-417/F kits (2271 liters per minute [600 gallons per minute]), leave all elements in place when removing the manifold. This provides balance and lets you remove the manifold easily.

3.3.5. F/S Teflon-Coated Screens - Cleaning, Repairing, and Handling:

3.3.5.1. Cleaning. The Teflon-coated screens, when new, operate in a satisfactory manner, but after processing millions of gallons of fuel that contain additives and contaminants they gradually become less effective. Every time the coalescer elements are changed the second-stage Teflon-coated screens should be inspected and cleaned according to the following procedure:

3.3.5.1.1. Connect a water hose to a hot water supply. Attach a nozzle to the hose and direct a high-velocity stream of water at a downward angle against the outer surface of the Teflon-coated screen. Hold the screen assembly vertically by the end to avoid touching the screen surface. Begin at the top and work downward along the length of the screen. Rotate the screen slowly so the entire surface is subject to the jet of hot water. Repeat as necessary until the screen is clean.

3.3.5.1.2. After cleaning, shake excess water from the screen and allow the remaining water to evaporate, or use clean, dry, oil-free compressed air. Air quality must be very clean. If the air quality is doubtful, do not use.

3.3.5.1.3. After each screen is dry, hold it horizontally and pour tap water onto the screen from a height of 25 to 50 millimeters (1 to 2 inches) above the screen. Pour water along the entire length of the screen while slowly rotating the screen. Under test, observe the way the water appears on the surface of the Teflon-coated screen. If the water soaks through the screen instead of beading up or rolling off, the screen must be recleaned.

3.3.5.1.4. The Teflon-coated screen must be visually inspected for small cuts and breaks. Small breaks in the Teflon-coated screen can be repaired for temporary service by patching with a fuel-resistant sealant, epoxy adhesive, or epoxy-base putty. If major holes appear in the Teflon-coated screen, rendering it impracticable to repair, the screen should be replaced.

3.3.5.2. Installing and Handling. Just before installing the Teflon-coated screens, agitate the screens briefly in a container of clean fuel to flush off all remaining water. (Use the same type of fuel being filtered.) Extra care must be taken during installation to ensure screens are not damaged. Screens must be installed very carefully to prevent physical damage to the Teflon coating. When installing the Teflon-coated screen assembly, the securing nut should not be overtorqued, as this can damage the screen assembly.

3.3.6. Initial Filling of Aviation Turbine Fuel F/Ss. Internal flash fires have occurred within F/Ss. In some cases, there were no audible sounds or immediate indications of a problem. These incidents are mainly due to electrostatic ignition of the volatile fuel-air mixture during the initial filling operation. Ignition inside the F/S is possible regardless of the type of aviation turbine fuel handled (e.g., JP-4, JP-5, JP-8). In most cases, coalescer elements cannot be grounded or bonded to expeditiously dissipate the static electric charge that is generated. Slow filling is the only authorized method of refilling an empty F/S (rule of thumb is to never fill a vessel in less than ten minutes). This slows the buildup of static electricity in the fuel, reducing the possibility of a spark igniting the explosive atmosphere inside the vessel.

**3.4. Meters.** Petroleum systems typically use positive displacement meters designed for either one- or two-way flow; however, MIL-HDBK-1022A allows turbine and orifice meters under certain circumstances. One-way flow meters are installed on truck fill stands and receipt facilities. Two-way flow meters are installed in the filter meter pit of some Type I hydrant refueling systems. The meters record the actual amount of fuel issued and defueled through the system. Meters used for custody transfer must be compensated for temperature. MIL-HDBK-1022A describes meter accuracy standards.

**3.5. Valves.** Manual valves are used to isolate portions of fuel systems, to throttle, to control flow, or direct the flow of fuel. All valves should be identified on the system charts and identified with a matching tag or stenciled marking on the valve. See Attachment 4 for a suggested method of identifying valves.

3.5.1. Plug valves.

3.5.1.1. Lubricated plug valves are not allowed in aircraft fueling systems and must be replaced.

3.5.1.2. Non-lubricated plug valves may be used in new systems or when existing lubricated plug valves are replaced. They are used as block valves, or where quick shut-off is required in various parts of the system.

3.5.2. DBB valves (Figure 3.5) conforming to API Specification (Spec) 6D, *Pipeline Valves (Gate, Plug, Ball, and Check),* are used as positive isolation valves around tanks and in piping runs. DBB

valves provide positive shutoff that can be verified by opening the cavity between the two blocks. See MIL-HDBK-1022A for recommended locations.

**Figure 3.5. DBB Valve.**

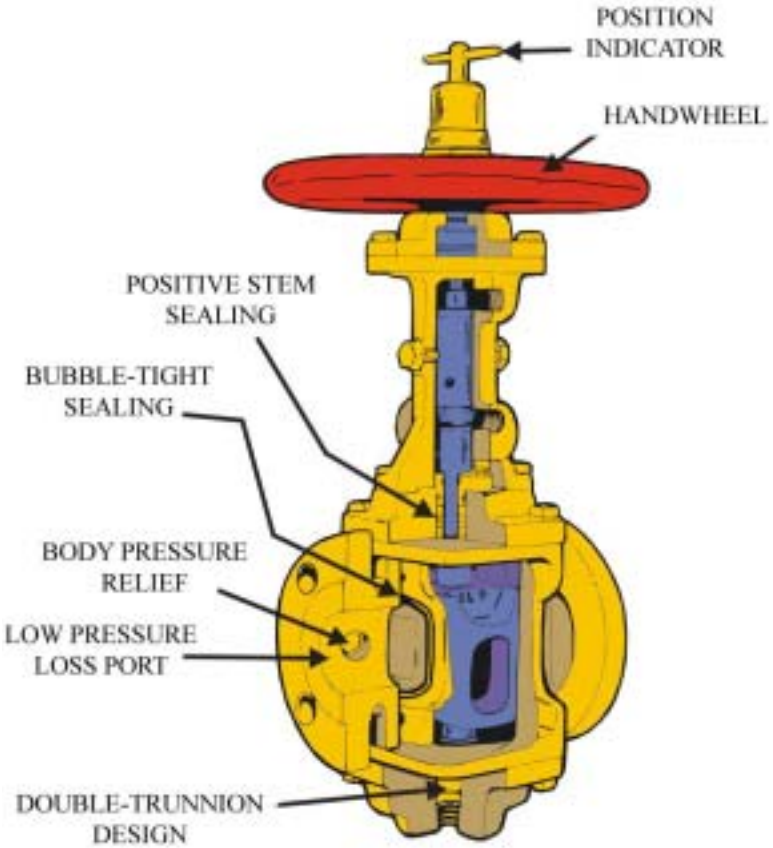


3.5.3. Ball valves (Figures 3.6 and 3.7) are used as quick shut-off (block) valves in applications such as piping to hydrant outlets, between pump and header, and between pump header and F/S. They are a suitable replacement for lubricated and non-lubricated plug valves.

**Figure 3.6. Ball Valve.**

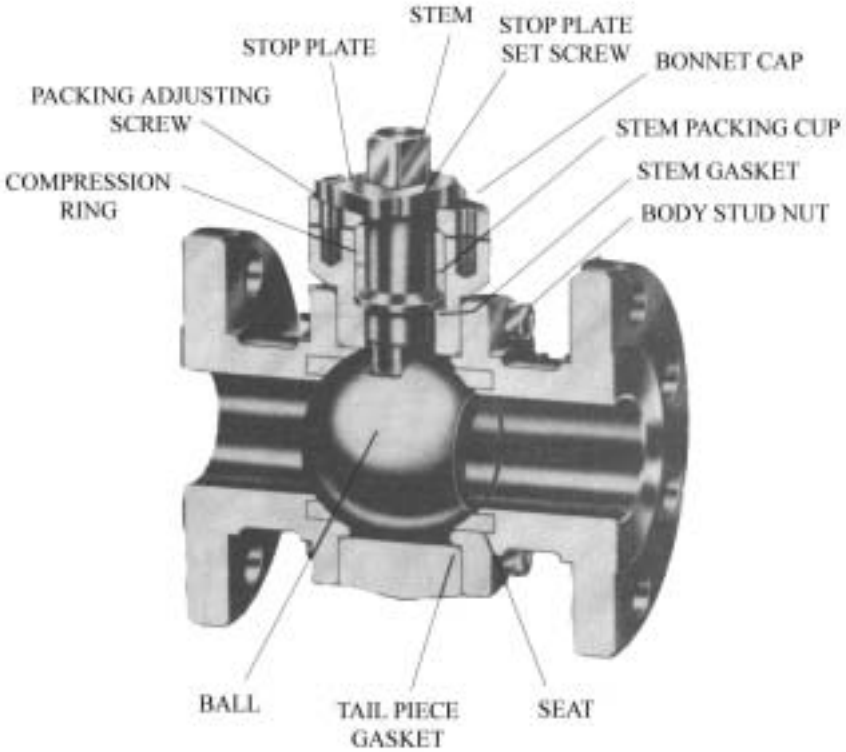


**Figure 3.7. Full Port Ball Valve.**

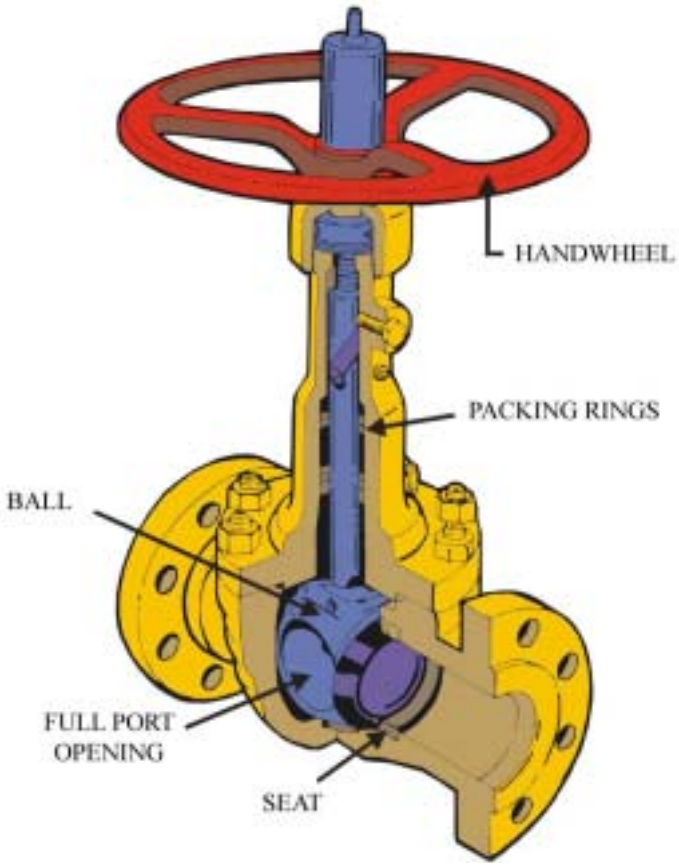

3.5.4. Gate valves (Figure 3.8) are not typically used in aircraft fueling systems. Use gate valves for dike drains and consider their use for transfer lines where periodic pigging is required. See MIL-HDBK-1022A for applications.

**Figure 3.8. Gate Valve.**

**3.6. Sump Pumps**. Manual or automatic sump pumps are installed in some pits to evacuate water or fluid from the pit. Most automatic pumps are float-actuated. The float controls a single-pole, spring-loaded switch that starts the pump at a predetermined high-liquid level and shuts the pump down when the level drops to a set low-liquid level. All electrical components of these pumps, including switch and motor, are explosion-proof and comply with requirements of the National Electric Code (NEC) for Class I, Division 1, Group D locations. Maintenance includes oiling and greasing, cleaning the inlet strainer, and inspecting the float switch and mechanism. Sump pumps are not required in lateral control pits of Type II systems unless justified by local conditions. Discharge from sump pumps may contain fuel and must be disposed of in accordance with governing environmental regulations.

**3.7. Line Strainers**. Line strainers are installed to prevent entry of foreign matter. Strainer location and size are detailed in MIL-HDBK-1022A. FMF personnel will clean strainers in accordance with T.O. 37-1-1, Section IV, paragraphs 4-11.o, 4-12.c and 4-13.a. LFM is responsible for providing gaskets as required.

**3.8. Automatic Air Eliminators**. The automatic air eliminator has a chamber with a float-operated valve in the top. Air is continuously discharged through the vent to the atmosphere until the air eliminator tank is filled with liquid, then the vent valve closes. Air eliminators are piped to a recovery tank or are within a curbed area to prevent accidental release of fuel.

**3.9. Truck and Tank Car Offloading.** Facilities for receiving fuel are typically near the installation fuel storage area.

3.9.1. Major components of offloading facilities include underground, low-profile, or aboveground tanks, grounding systems, suction hoses, piping, pumps, air-elimination equipment, and electrical control equipment. For offloading problems, consult the MAJCOM fuels engineer. For required maintenance frequencies see Chapter 10. For troubleshooting equipment, refer to the manufacturer's instructions.

3.9.2. Pumps will be self-priming centrifugal type configured to provide automatic air elimination for offloading into aboveground storage tanks. Contact your MAJCOM fuels engineer for additional information since there are many types and configurations of pumps. Underground or low-profile tanks typically receive fuel by gravity offload.

3.9.3. Offloading hoses should be 101-millimeter, lightweight, reinforced, vacuum-rated hoses. See MIL-HDBK-1022A for details. Store the hoses away from direct sunlight in a hinged enclosure or purchase ultraviolet (UV) light-resistant hose.

3.9.4. Design of offloading facilities requires unique knowledge and must be done by engineers that specialize in aircraft fueling systems.

**3.10. Tanker or Barge Offloading.** Fuel piers and wharves are used to receive fuel from marine vessels at air bases and tank farms near navigable waters. The pier or wharf has mooring facilities, hose connections, derricks or unloading arms, attaching hose, hose storage racks, pipelines, and fire-protection equipment. A separate pipeline is usually provided for each product. Tankers and barges have pumps to discharge cargo, and usually offloading hoses as well. When necessary, booster or transfer pumps are installed in the pipelines on shore to transfer fuel from the tanker to the tank farm. Pipelines must be protected from corrosion with an emphasis on cathodic protection. . Some locations will have mono-buoys with either underwater pipelines or retractable floating hoses for offloading offshore.

**3.11. Fill Stands.**

3.11.1. General. Fill stands are used to issue fuel to refueler trucks, tank trucks, or rail tank cars.

3.11.1.1. Provide separate facilities for each type fuel. Couplers must not be interchangeable.

3.11.1.2. Bottom loading is the only acceptable means of loading tank trucks and tank cars. It increases safety by reducing turbulence and splashing which contribute to static electricity generation. Existing top-loading stands must be converted to bottom-loading. If unusual circumstances require top-loading, contact the MAJCOM fuels engineer for a waiver.

3.11.1.3. Design flow through loading arms and or hoses is 1135 to 2271 liters per minute (300 to 600 gallons per minute). See MIL-HDBK-1022A for further design guidance.

3.11.2. Components:

3.11.2.1. Tank Trucks. The preferred loading arm for jet fuel is a metal, counterbalanced, swivel-type of aluminum or stainless steel, although an approved hose meeting the requirements of API Bulletin 1529, *Aviation Fueling Hoses*, is acceptable. Hoses, if provided, must be stored away from direct sunlight. Other components include a diaphragm control valve with deadman to control starting and stopping of fuel transfer, grounding equipment, dry break couplers (API RP 1004, *Bottom Loading and Vapor Recovery for MC-306 Tank Motor Vehicles*), vapor collection/recovery systems when required, strainer, and meter. Meters should also be designed to preset the fill volume and automatically shut off flow when the preset amount is reached.

3.11.2.2. Tank Cars. Counterbalanced articulated (swivel-type) tank car loading assemblies are preferred. Typical components include those for tank trucks (paragraph 3.11.2.1.). An electronic fuel level sensing system is frequently provided.

**3.12. Ground Product Fueling Systems.** These systems are usually designed to dispense fuel from either an aboveground or an underground storage tank through a service station type dispenser. Fuel is pumped using a dispenser-mounted suction pump, or a submersible pump mounted in the fuel tank. Separate systems are used for each grade of fuel dispensed. The primary fuels dispensed are MOGAS (motor gasoline), diesel, and JP-8. The Environmental Protection Agency (EPA) limits the dispensing rate for MOGAS to 37 liters per minute (10 gallons per minute). Diesel and JP-8 are dispensed at 37 to 56 liters per minute (10 to 15 gallons per minute) per outlet for passenger cars, and up to 94 liters per minute (25 gallons per minute) per outlet for trucks and buses. Fueling stations are automated using the Air Force Automated Fuels Service Station (AFSS) Fuels Management System made by Syn-Tech Systems, Inc. LFM personnel typically do not perform maintenance on the AFSS system unless internal dispenser components are replaced. Refer to the AFSS manufacturer's manual for detailed instructions.

3.12.1. System Requirements and Components:

3.12.1.1. Environment. In recent years, environmental regulations have played a key role in the design, construction, operation, and maintenance of fueling stations.

3.12.1.1.1. Underground tanks must include leak detection, corrosion protection (for steel-cathodic protection), and spill and overfill protection. Many new tanks are double-walled or placed aboveground.

3.12.1.1.2. Pressurized gasoline-dispensing systems must automatically shut down or sound an alarm if leaking. Most dispensing systems have an automatic flow restrictor ("Red Jacket").

3.12.1.1.3. Vapor recovery systems may be required by governing environmental regulations.

3.12.2. Leaks. More than half of suspected tank leaks have actually been leaky piping; check both before needlessly removing a tank. The combination of a protective coating and well-maintained cathodic protection are key. When replacing tanks, use double-wall steel STIp3 tanks, double-wall fiberglass, or the equivalent. Aboveground self-diking tanks are good alternatives. Tank

construction requirements will vary with the application. Refer to National Fire Protection Association (NFPA) 30, *Flammable and Combustible Liquids*, NFPA 30A, *Automotive and Marine Service Station Code*, and Underwriter's Laboratory (UL) 2085, *Standard for Protected Aboveground Tanks for Flammable and Combustible Liquids*, for standards to follow. Tanks placed next to buildings must follow standards for protected secondary contained tanks. They should have both an inner and outer steel tank. See MIL-HDBK-1022A for details since the fire resistance of some popular tanks (including GSA listed) does not meet DoD requirements.

3.12.3. Fire Protection Requirements. NFPA 30 requires an approved emergency shutoff valve with a fusible link or other thermally actuated device designed to close automatically if there is a severe impact or fire exposure. The fusible link valve must be installed in the supply line at the base of each dispenser receiving fuel from a submersible pump or aboveground storage tank. NFPA 30 also requires the use of a dry break swivel between the hose and the nozzle of both the self-contained and submersible pump dispensing units.

3.12.4. Meters:

3.12.4.1. Description. The meter is generally a three- or four-cylinder positive-displacement type designed especially for use in gasoline-dispensing pumps. Under normal use it requires very little attention.

3.12.4.2. Maintenance and Repair. Meters are maintained according to the manufacturer's instructions.

3.12.4.3. Calibration. Meters are satisfactory for further operation when the error of the meter does not exceed ±0.2% of the total quantity delivered (0.2% of 18.9 liters [5 gallons] equals 37.8 cubic centimeters [2.31 cubic inches]).

# Chapter 4

## HYDRANT FUELING SYSTEM, TYPE I (PANERO)

**4.1. General Information.** Prior to the development of hydrant fueling systems, aircraft were refueled from drums of aviation fuel that were hauled to the aircraft. Later, fuel was transferred from storage tanks into trucks that could pump the fuel into the aircraft. These methods were adequate for over-the-wing filling of relatively small aircraft, but they proved too inefficient and time consuming for the larger aircraft being built.

**4.2. Original Panero.** This was the first hydrant system used by the Air Force and it was built throughout the 1940s and 1950s. These systems were based on the concept of bringing the aircraft to the fuel. Fuel was pumped to a single refueling outlet at the edge of the aircraft parking ramp and aircraft had to be moved to the fueling outlet, refueled, and then moved back to the parking location. This reduced the need for truck refueling. The Original Panero system had two automatic control valves in the filter meter pit: one on the refueling line and a separate valve on the defueling line. Since hydrant systems are constantly improved and upgraded there are few Original Panero systems left. Major modifications to the Original Panero created the Modified Panero system. The Modified Panero system is still in use at some military installations today and uses one automatic control valve (302AF refuel/defuel control valve) in the filter meter pit to perform both refuel and defuel operations. This chapter includes a description of the Modified Panero's operation, major components, and pressure settings (see Figure 4.1).

**Figure 4.1. Modified Panero, Type I Hydrant System.**

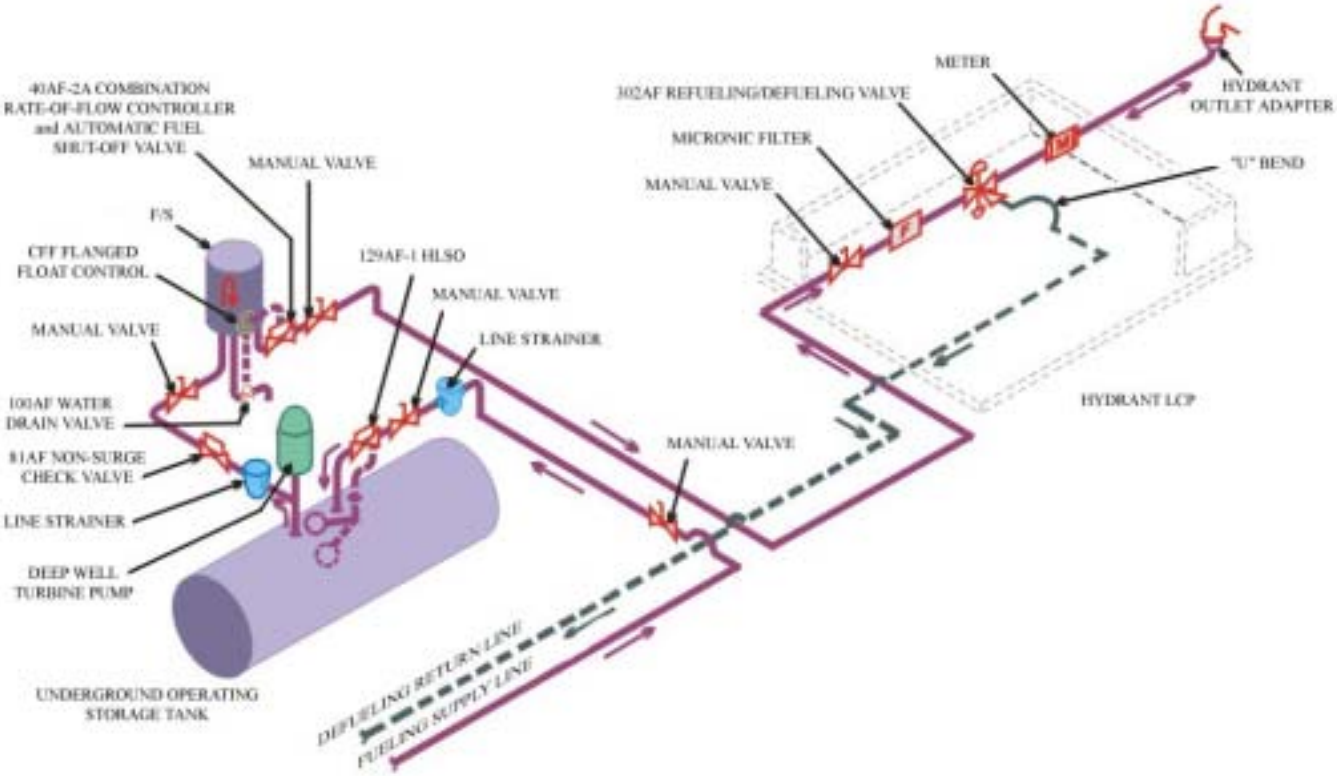


**4.3. Modified Panero System Operation.** When fuel is required at a hydrant outlet, the operator places a magnet on the refueling magnetic control assembly KISS switch). This energizes the preselected system refuel pump and the solenoid on the 302AF valve. As fuel is pumped through the system it flows through several components. Use Figure 4.1 to follow the fuel flow. Fuel is stored in underground operating storage tanks. A pumphouse sits directly over the underground tanks. The pumphouse contains pumps, F/Ss, piping, valves and other components. The pumps draw the fuel from the tank and force it through the F/S at a rate of 1135 to 2271 liters per minute (300 to 600 gallons per minute). The fuel flows into the main refueling manifold that connects to several lines called laterals. Along the laterals, the line passes through a filter meter pit. In this pit, the fuel is filtered and metered before it passes through a 302AF refuel/defuel control valve. The control valve reduces the fuel pressure before fuel is delivered to the hydrant outlet where a hose is used to connect the system piping to the aircraft. The 302AF valve also controls system defuels. When the magnet is removed from the KISS switch, the pump and the 302AF solenoid both de-energize. The 302AF is now placed to allow gravity defueling. During defuel, the fuel flows through the 302AF to a separate defueling line back to the defuel tank. ***NOTE:*** Most Air Force bases have modified their Panero systems (filter meter pits) to use MH2-series hose carts. This modification consists of removing the meter and micronic filter from the filter meter pit and installing pipe spools in their places.

**4.4. System Components.**

4.4.1. Deep-Well Turbine Pump (Vertical). Each underground operating storage tank has one 1135- or 2271-liter-per-minute (300- or 600-gallon-per-minute) pump. See Chapter 3 for a description and Chapter 10 for maintenance frequencies.

4.4.2. Nonsurge/Check Valve (81AF).

4.4.2.1. General. A nonsurge/check valve (Figure 4.2) is required in the discharge line of each deep-well turbine pump to keep the pump surges from damaging downstream equipment and prevent the reverse flow of fuel through the F/S and pump. Maintenance frequencies are noted in Chapter 10.

**Figure 4.2. Nonsurge/Check Valve (81AF).**

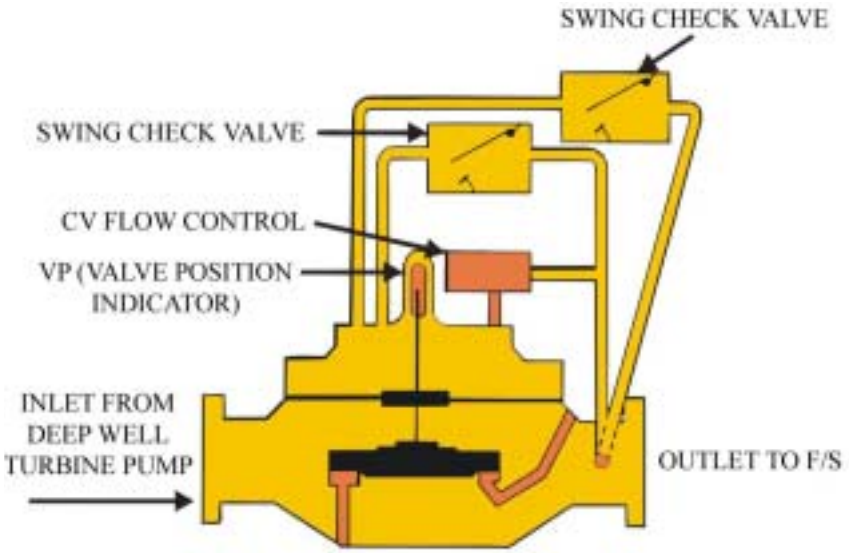


4.4.2.2. Valve Setting. Set the valve to open slowly to prevent pressure surges into the F/S and downstream equipment. The typical setting is about 20 seconds, with a full range of 5 to 60 seconds. To set the valve, turn the CV flow control counter-clockwise to make the valve open faster and clockwise to open slower.

4.4.3. F/S Control Valve (FSCV) (40AF 2A):

4.4.3.1. General. The FSCV (Figure 4.3) controls the rate of flow through the separator, prevents reverse flow, and prevents water discharge when the flange float control reaches the high position. The automatic water drain feature has been disabled except for certain receipt filters where water in the fuel is a problem. The water shut-off feature (slug valve) stays active.

**Figure 4.3. F/S Control Valve (40AF-2A).**

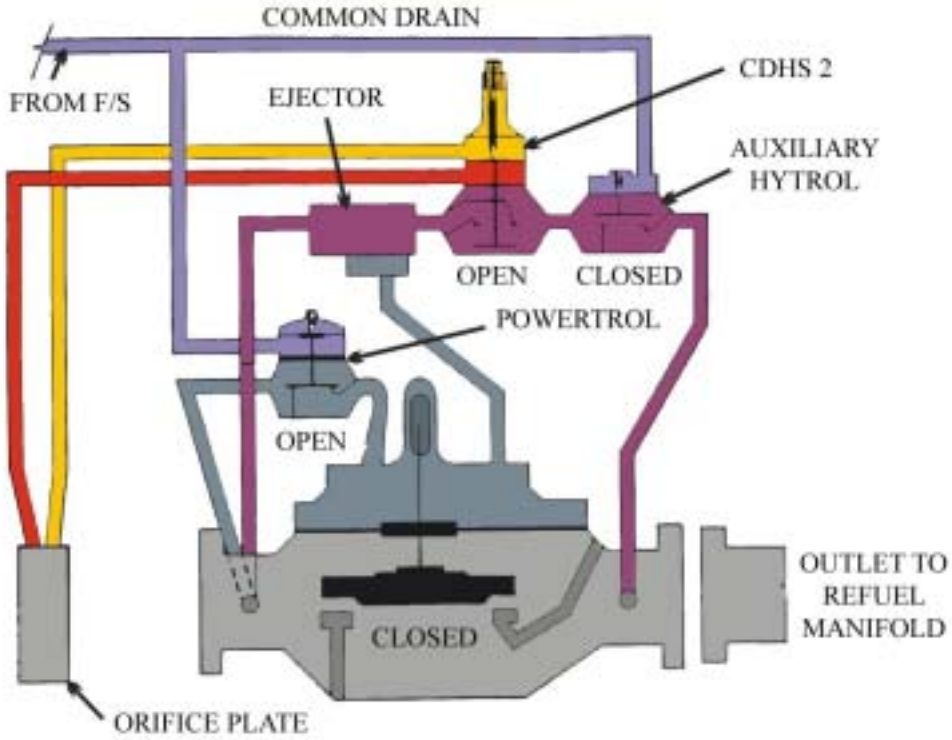


4.4.3.2. Valve Settings. Set the rate-of-flow control to discharge at the vessel nameplate rating (typically 2271 liters per minute [600 gallons per minute]) using the CDHS-2B. Turn the adjusting stem clockwise to increase the flow rate and counterclockwise to decrease.

4.4.4. Meters. See Chapter 2 for description.

4.4.5. Three-Port, Two-Way, Refuel/Defuel Valve (302AF):

4.4.5.1. General. The 302AF is at the junction of the refuel and defuel line in the filter/meter pit. The valve is unique in that it is a three-port automatic control valve. This allows fuel flow in two directions through the same automatic valve: one direction for refueling and another for defueling. When the KISS switch at the hydrant outlet is activated, the 302AF solenoid energizes and the valve is ready to refuel. The valve automatically performs the following functions: reduces pressure going to the hydrant outlet; relieves excess hydrant outlet pressure; shuts off in case of excess flow (broken hose); and provides remote control of the valve. When the valve is de-energized it provides a means for defueling aircraft by gravity flow.

4.4.5.2. Pressure Setting:

4.4.5.2.1. Set the pressure-reducing control (CRD) to maintain normal operating pressure (NOP) at the furthest outlet. NOP is the lowest pressure capable of achieving maximum flow rate and smooth operation. ***NOTE:*** The NOP for most Type I systems is 100 psi, measured at the furthest outlet.

4.4.5.2.2. Set the unloading pressure-relief control (CRL) to open the defuel side at 10 psi above NOP.

4.4.5.2.3. Set the loading CRL to close the refueling side at 5 psi above NOP.

4.4.5.2.4. Set the CDHS-3 according to the procedures in Attachment 3.

4.4.5.2.5. Set the CV flow control to open the valve as quickly as possible without tripping the CDHS-3, typically between 15 to 20 seconds.

4.4.5.3. Recommended Setting Procedure. See Figure 4.4.

**Figure 4.4. Refuel/Defuel Control Valve (302AF).**

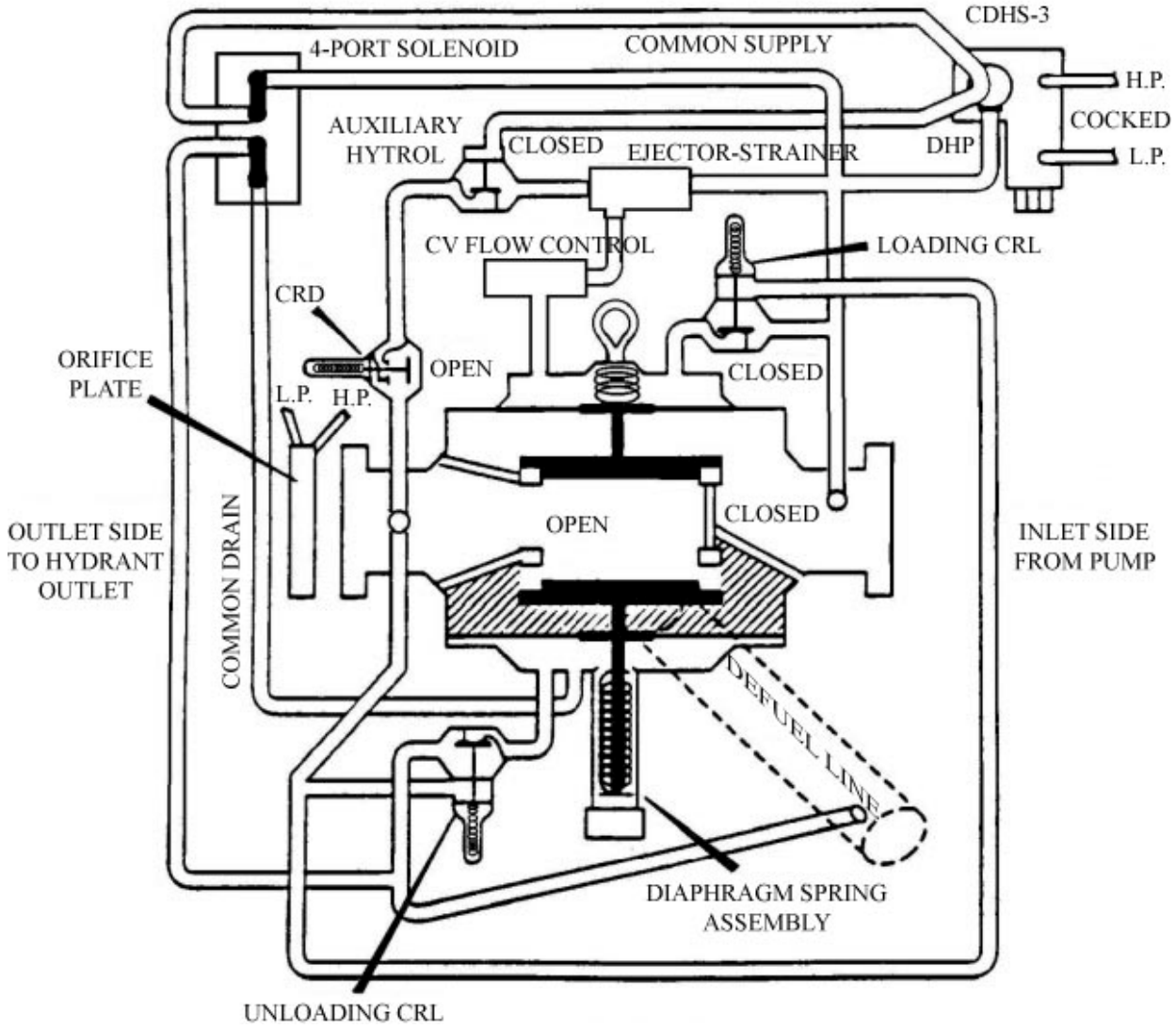


4.4.5.3.1. Set the CV flow control to open the valve as quickly as possible without tripping the CDHS-3, typically between 15 to 20 seconds. Adjust the CV flow control using the same procedures described for the 81AF valve (paragraph 4.4.2.).

4.4.5.3.2. Set the CRD, loading, and unloading CRL using the following procedure:

4.4.5.3.2.1. Bottom both CRLs.

4.4.5.3.2.2. Energize the system and adjust the CRD to 10 psi above NOP.

4.4.5.3.2.3. Back out on the unloading CRL until the defueling portion of the valve starts to open (a 2- to 3-psi drop is acceptable).

4.4.5.3.2.4. Tighten the jam nut on the unloading CRL.

4.4.5.3.2.5. Back out on the CRD to 5 psi above NOP.

4.4.5.3.2.6. Back out on the loading CRL until the refueling portion of the valve starts to close (a 2- to 3-psi drop is acceptable).

4.4.5.3.2.7. Tighten the jam nut on the loading CRL.

4.4.5.3.2.8. Back off on the CRD to NOP.

4.4.5.3.2.9. Lock the jam nut on the CRD.

4.4.5.3.2.10. Check settings by slowly closing a downstream valve.

4.4.5.3.2.11. The refuel valve should close to reduce outlet pressure.

4.4.5.3.2.12. If the loading CRL fails to close fast enough, the unloading CRL will open to dump the excess pressure into the defuel tank.

4.4.5.3.2.13. Set the CDHS-3 according to the procedures outlined in Attachment 3.

4.4.5.4. For additional automatic control valve troubleshooting procedures, refer to the manufacturer's manual.

4.4.6. Hydrant Outlet Adapter. Panero systems use two types of hydrant adapters: the "Buckeye" and the "Philadelphia." The Philadelphia is shown in Figure 4.5; bases should have replaced these adapters with the new API-type adapter.

**Figure 4.5. Philadelphia Hydrant Adapter.**

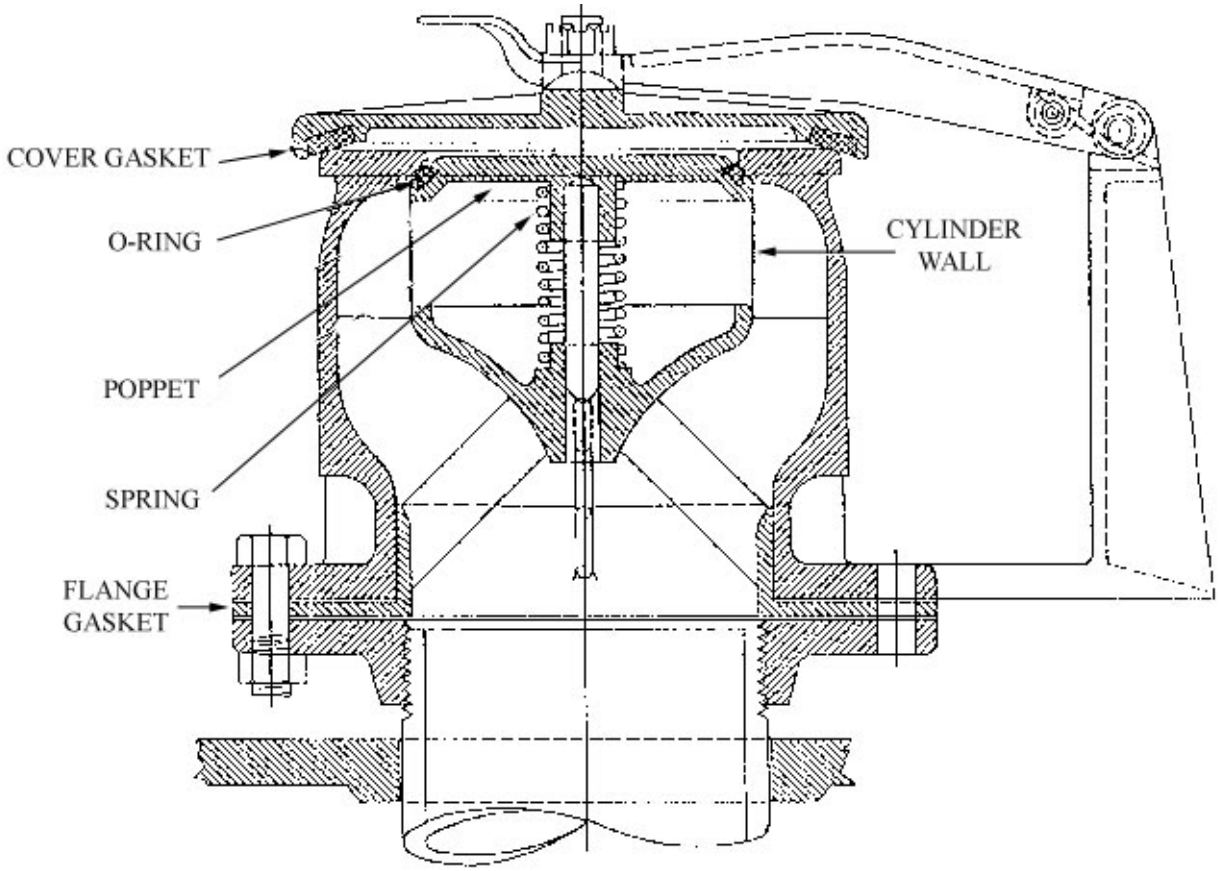

4.4.7. Remote Controls (Electrical):

4.4.7.1. Fixed Control Stations. The original joy-cable fixed control stations on Type I hydrant systems should have been converted to the magnetic control switches similar to the KISS switches used in the Type II system.

4.4.7.2. Emergency Switches. Emergency switches are single-pole-type and connected in series with the power supply line to the control equipment in the operating pumphouse. The switches are provided so operating personnel at any pit can stop all fueling operations in case of fire or other mishap. After activation of an emergency switch, the controls in the operating pumphouses must be manually reset to resume fueling.

4.4.8. Defueling Tank. A deep-well turbine pump is installed on the defueling tank to transfer the product to bulk storage or operating tanks. The defueling tank should be equipped with a high-level alarm to warn personnel that the fuel level in the tank is approaching the predetermined fill level, and a high-level control valve to shut off the flow of fuel into the tank.

4.4.9. Liquid Level Gauge and Low-Level Control. A liquid level gauge and low-level control (Figure 4.6) are installed to shut down the pump automatically. The liquid level gauge and the low-level control prevents withdrawing fuel from the tank below a predetermined level (typically 330 millimeters [13 inches] on underground tanks), and prevents the pump from running dry.

**Figure 4.6. Liquid Level Gauge (Liquidometer).**

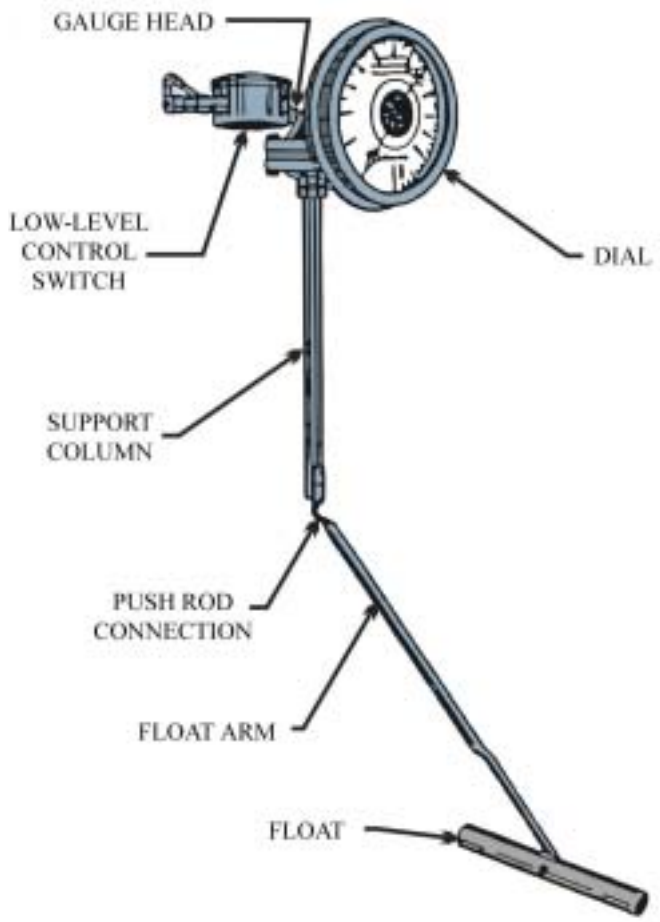

4.4.10. High Level Control Valve (Pan-Type) (124AF). Figure 4.7 shows this valve. It shuts down fuel receipts into the tank when a predetermined level, typically 279 millimeters (11 inches) from the top of the tank, is reached. Maintenance frequencies are noted in Chapter 10.

**Figure 4.7. High-Level Shutoff Valve (124AF).**

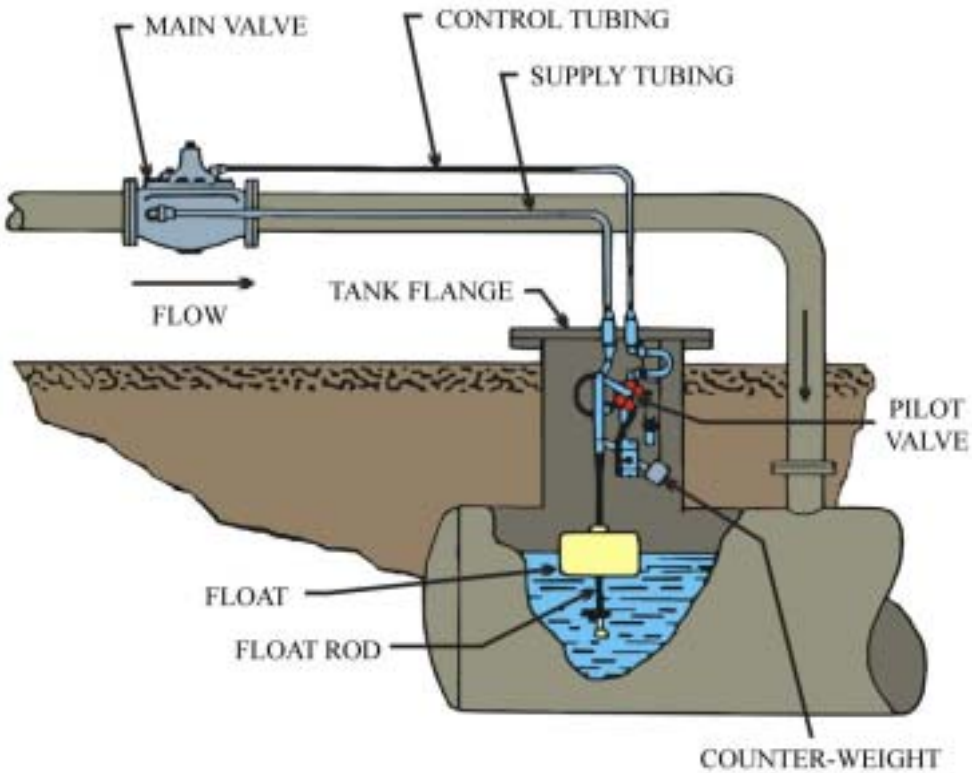

# Chapter 5

## HYDRANT FUELING SYSTEM, TYPE II (PRITCHARD)

**5.1. General Information.** The Type II Pritchard System was developed in 1955 to improve operating characteristics in conventional hydrant fueling systems. It can service multiple hydrant outlets per control pit, so allowing more flexibility in parking aircraft and reducing the need to tow aircraft to refueling positions. The Type II pumphouse is similar to the Type I except the separate defuel tank is no longer needed. Instead, one Type II operating tank is designated as the defuel tank for the day. The filter/meter pit of the Panero system is now the lateral control pit (LCP), and a defueling pump with four different automatic valves has replaced the dual-purpose 302AF valve. The MH-2 hose cart is standard equipment for connecting the hydrant outlet to the aircraft, so there is no need for filtration or meters in the LCP. Figure 5.1 shows the layout of a typical system. The following is a simplified description of operation:

5.1.1. Refueling. Like the Type I system, when fuel is required at a hydrant outlet, the operator places a magnet on the refueling magnetic control assembly (KISS switch). This causes a preselected pump in the pumphouse to start and energizes the solenoid on the refueling control valve (90AF-8) in the hydrant lateral control pit. Fuel moves from the pumphouse into the fueling manifold and to the LCP. It enters the refueling control valve and causes it to open. The 90AF-8 valve provides five functions: pressure reduction; nonsurge; pressure relief; excess flow shutoff; and emergency shutoff. Fuel flows through the hydrant adapter and the MH-2 hose cart to the aircraft. During refueling, the 134AF defueling valve solenoid is de-energized and the valve is held closed. The 50AF-2 pressure relief valve relieves excess pressure from the upstream side of the 90AF-8 into the defuel line.

**Figure 5.1. Pritchard, Type II Hydrant System.**

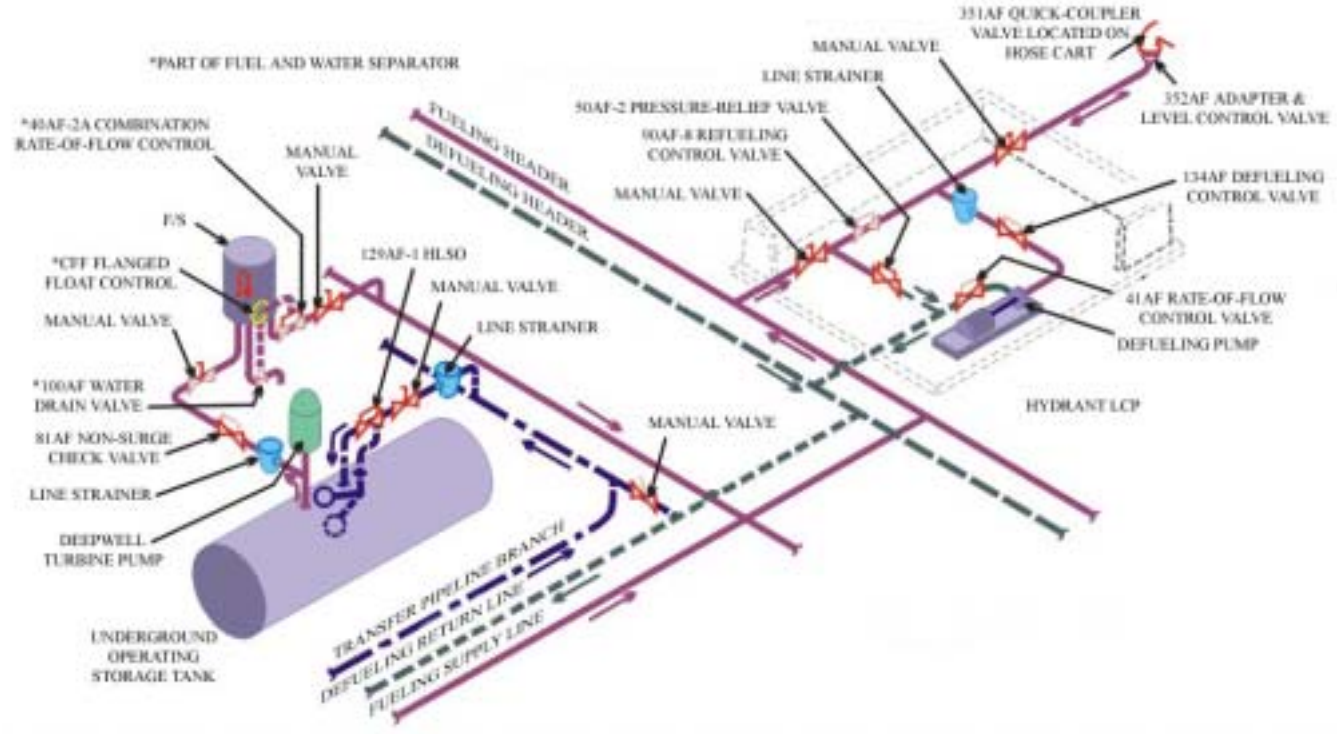


5.1.2. Defueling. When it is necessary to evacuate a hose cart or defuel an aircraft, the operator places the magnet on the defuel KISS switch. This causes the solenoid on the 134AF defueling valve to open and the defuel pump to be energized. Fuel is then drawn through the defuel pump and forced through the 41AF rate-of-flow control valve into the defuel line at a rate of 757 liters per minute (200 gallons per minute). Fuel flows to the operating tank designated to receive the product.

**5.2. Deep-Well (Vertical) Turbine Pump.** Pump design is the same for both Types I and II hydrant fueling systems. See Chapter 3 for a description and Chapter 10 for maintenance frequencies.

**5.3. Nonsurge/Check Valve**. The 81AF has been converted to the 81AF-8 nonsurge/check valve (Figure 5.2). This modification involves replacing the swing check valves with hytrol check valves. The speed control setting is the same as described for the Type I Panero system (paragraph 4.4.2.2.).

**Figure 5.2. Nonsurge/Check Valve (81AF-8).**

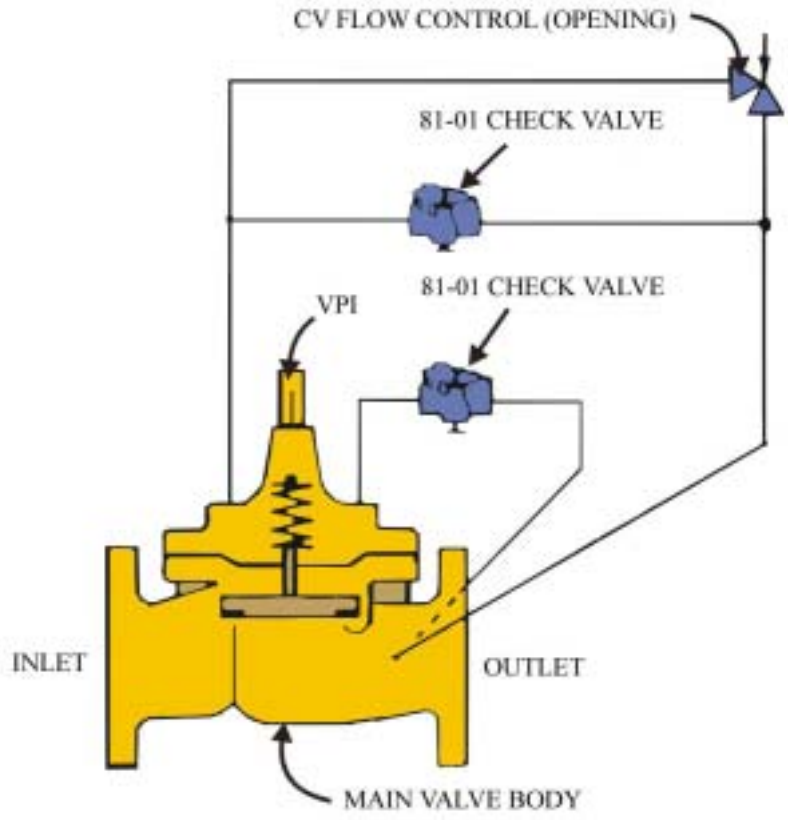


**5.4. F/S**. Chapter 3 gives a description of typical F/Ss and Chapter 10 outlines the maintenance frequencies.

**5.5. F/S Control Valve (FSCV) (40AF-2C).**

5.5.1. General. The 40AF-2A FSCV has been modified at most bases and the new valve is known as the 40AF-2C (Figure 5.3). The 40AF-2C valve still performs the same functions as the 40AF-2A (controls the rate of flow through the separator, prevents reverse flow, prevents water discharge when the flange float control reaches the high position), but now the powertrol, hytrol, and ejector (see Figure 4.3) were replaced with a 102B-1, three-way hytrol with a 3.1-millimeter (0.125-inch) orifice.

5.5.2. Valve Settings. Set the rate-of-flow control to discharge 2271 liters per minute (600 gallons per minute) using the CDHS-2B. Turn the adjusting stem clockwise to increase the flow rate and counterclockwise to decrease.

**Figure 5.3. F/S Control Valve (40AF-2C).**

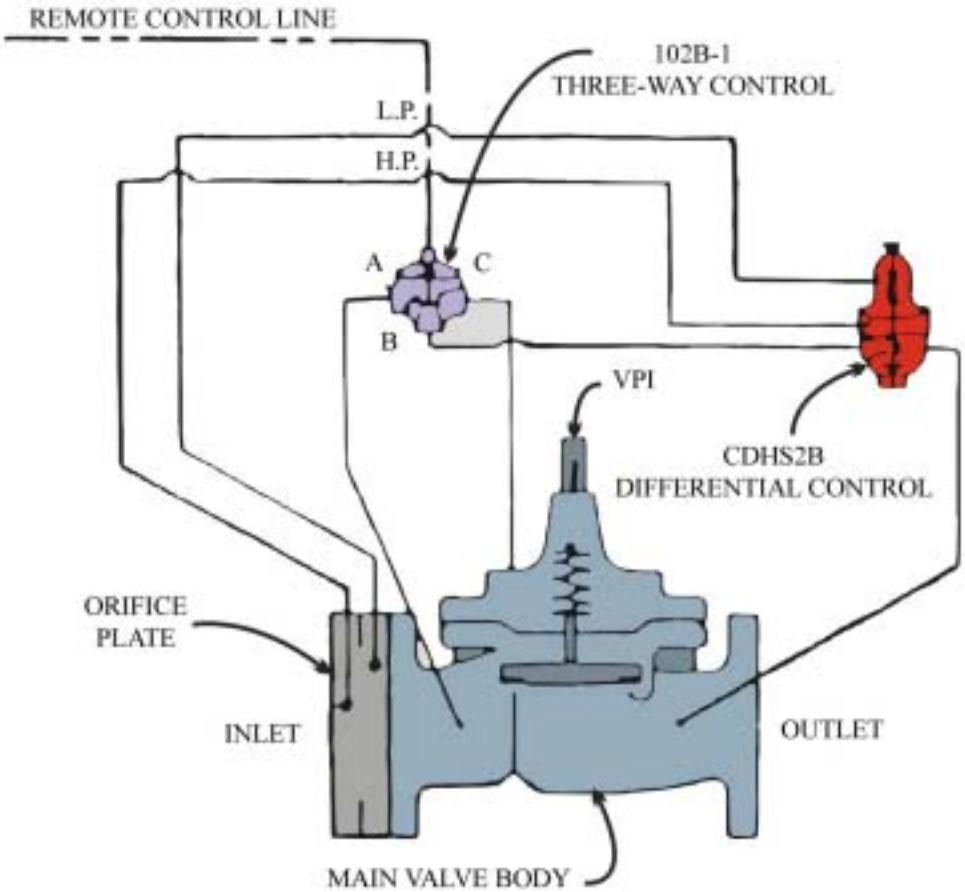


## 5.6. Refueling Control Valve (90AF-8).

5.6.1. General. The 90AF-8 (Figure 5.4) is a combination pressure-reducing, emergency shutoff, nonsurge, pressure-relief, and excess-flow-shutoff valve.

**Figure 5.4. Refueling Control Valve (90AF-8).**

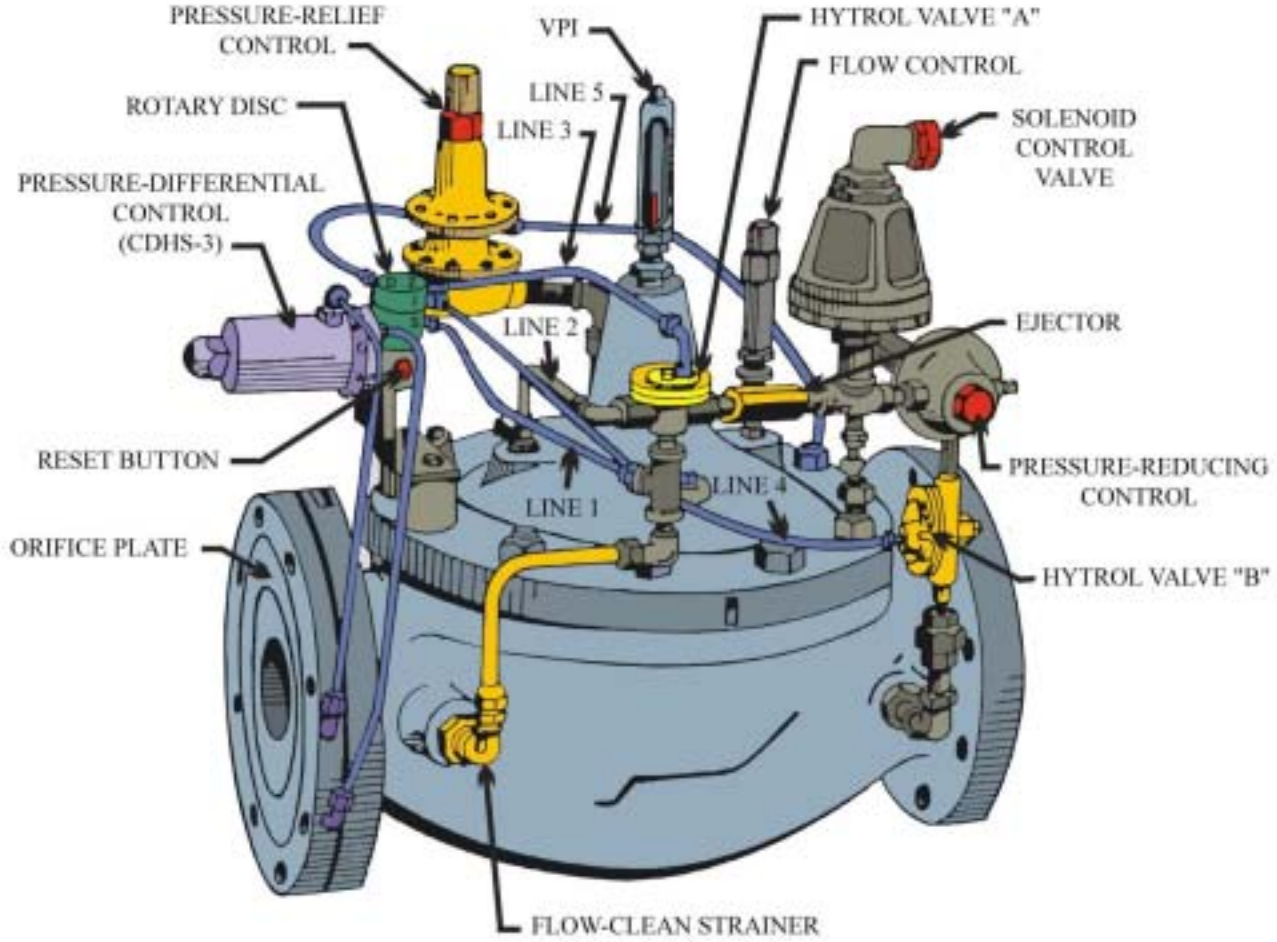


5.6.2. Pressure Setting:

5.6.2.1. Set the CRD to maintain NOP of 100 psi at the furthest outlet. NOP is the lowest pressure capable of achieving maximum flow rate and smooth operation.

5.6.2.2. Set the CRL to close the refueling control valve at 5 psi above NOP.

5.6.2.3. Set the CDHS-3 according to the procedures in Attachment 3.

5.6.2.4. Set the CV flow control to open the valve as quickly as possible without tripping the CDHS-3.

## 5.7. Pressure Relief Valve (50AF-2).

5.7.1. General. The pressure relief valve (Figure 5.5) is installed in the hydrant LCP between the refueling pipeline and the defueling line. Pressure relief valves are provided to relieve excessive pressure caused by closing a downstream valve or thermal expansion in a closed section of pipeline. This valve is installed to flow fuel under the disc so that it "fails safe" in the open position if the main valve diaphragm fails.

**Figure 5.5. Pressure Relief Valve (50AF-2).**

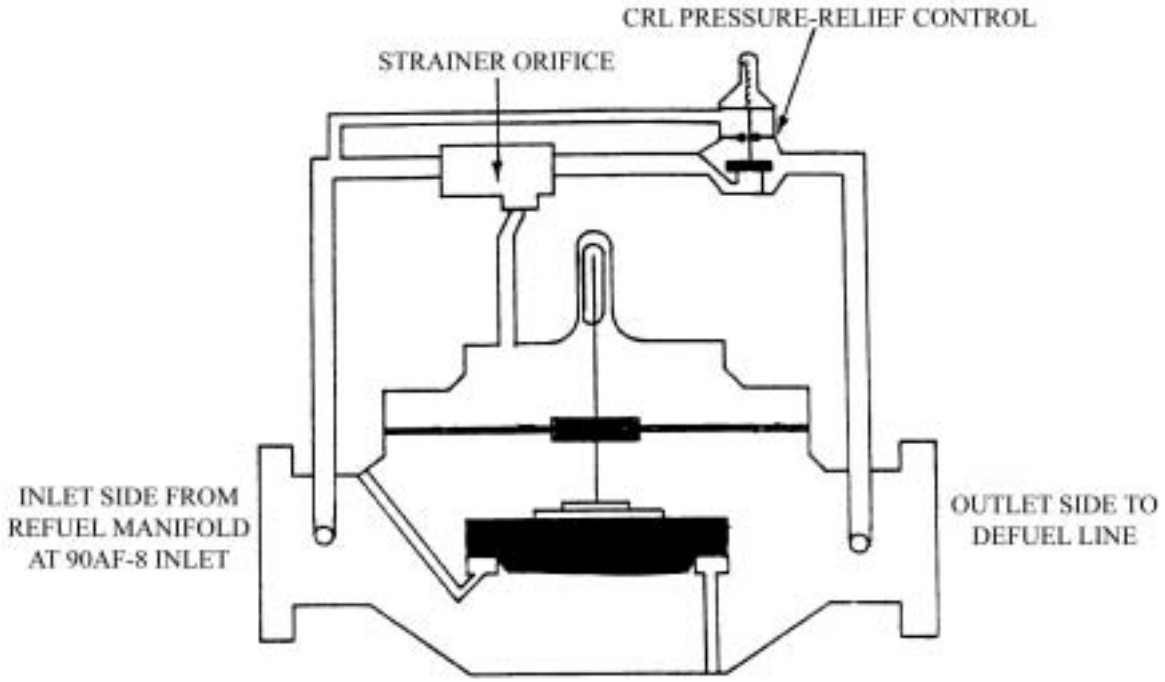


5.7.2. Pressure Setting. The 50AF-2 should be set at 10 psi above normal inlet pressure to the 90AF-8 (typical settings are in the range of 110 to 125 psi).

5.7.3. Recommended Setting Procedure for the Refueling Control (90AF-8) and Pressure Relief Valve (50AF-2).

5.7.3.1. Set up system to refuel through the 90AF-8 valve.

5.7.3.2. Ensure a gauge is installed at the farthest hydrant outlet.

5.7.3.3. Be sure the CDHS-3 is in the cocked position.

5.7.3.4. Bottom both CRLs (90AF-8 and 50AF-2).

5.7.3.5. Energize the system and establish a smooth flow.

5.7.3.6. Adjust the 90AF-8 CRD until the gauge at the farthest outlet reads 105 psi.

5.7.3.7. Back off on the 90AF-8 CRL until the gauge needle dips (2 to 3 psi is acceptable).

5.7.3.8. Adjust the 90AF-8 CRD until the gauge at the outlet reads 100 psi (note the 90AF-8 inlet pressure).

5.7.3.9. De-energize system.

5.7.3.10. Close a manual valve downstream of the 90AF-8 and shut off the 90AF-8 solenoid switch.

5.7.3.11. Energize the system.

5.7.3.12. Back off on 50AF-2 CRL set screw until the valve starts to open and the inlet pressure is 10 psi above the normal inlet pressure recorded in paragraph 5.7.3.8 above.

5.7.3.13. De-energize the system.

5.7.3.14. Open the manual valve and turn on the solenoid switch (paragraph 5.7.3.10).

**5.8. Defueling Control Valve (134AF).** The defueling control valve (Figure 5.6) is a diaphragm-actuated solenoid shutoff valve. This valve and the defueling pump energize simultaneously. When the valve is energized, it opens to permit defueling through the system.

**Figure 5.6. Defueling Control Valve (134AF).**

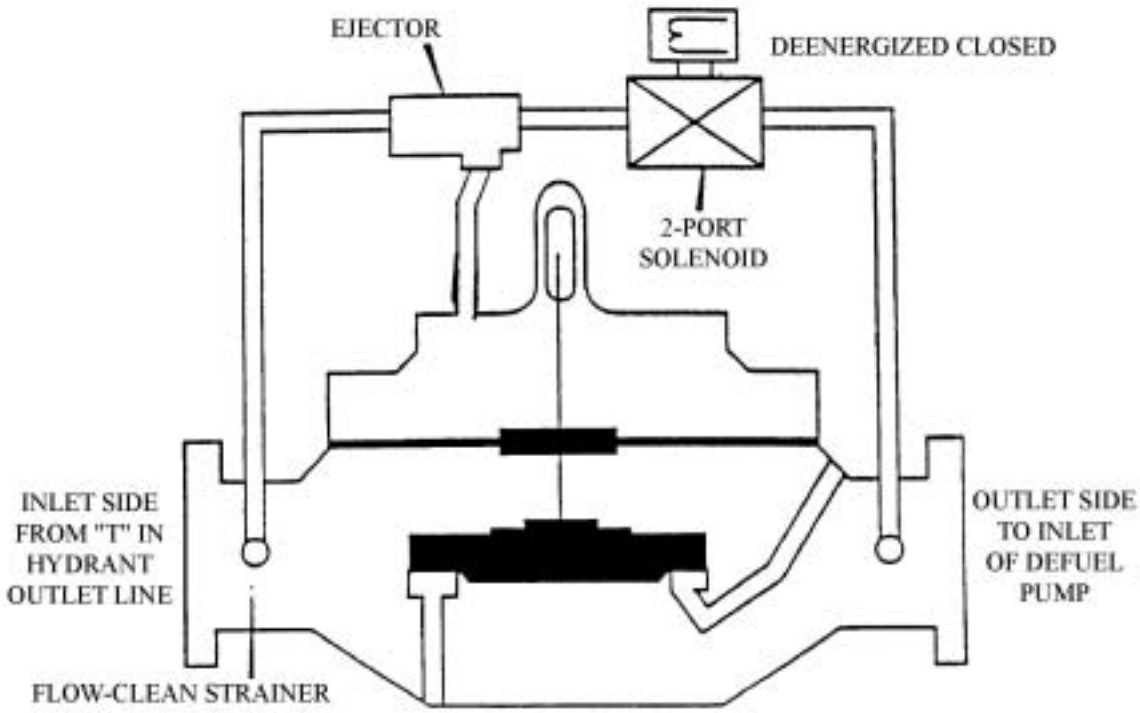


**5.9. Dual Rate-of-Flow Control Valve (41AF).**

5.9.1. The dual rate-of-flow control valve (Figure 5.7) is a combination rate-of-flow control valve and fast-closing, hydraulically operated check valve that closes the main valve against reverse flow. It performs two distinct functions: maintaining a preset flow rate of 757 liters per minute (200 gallons per minute); and acting as a check valve to prevent reverse flow.

5.9.2. Pressure Setting. Set the valve to maintain a flow rate of 757 liters per minute (200 gallons per minute) according to manufacturer's guidelines.

**Figure 5.7. Dual Rate-of-Flow Control Valve (41AF).**

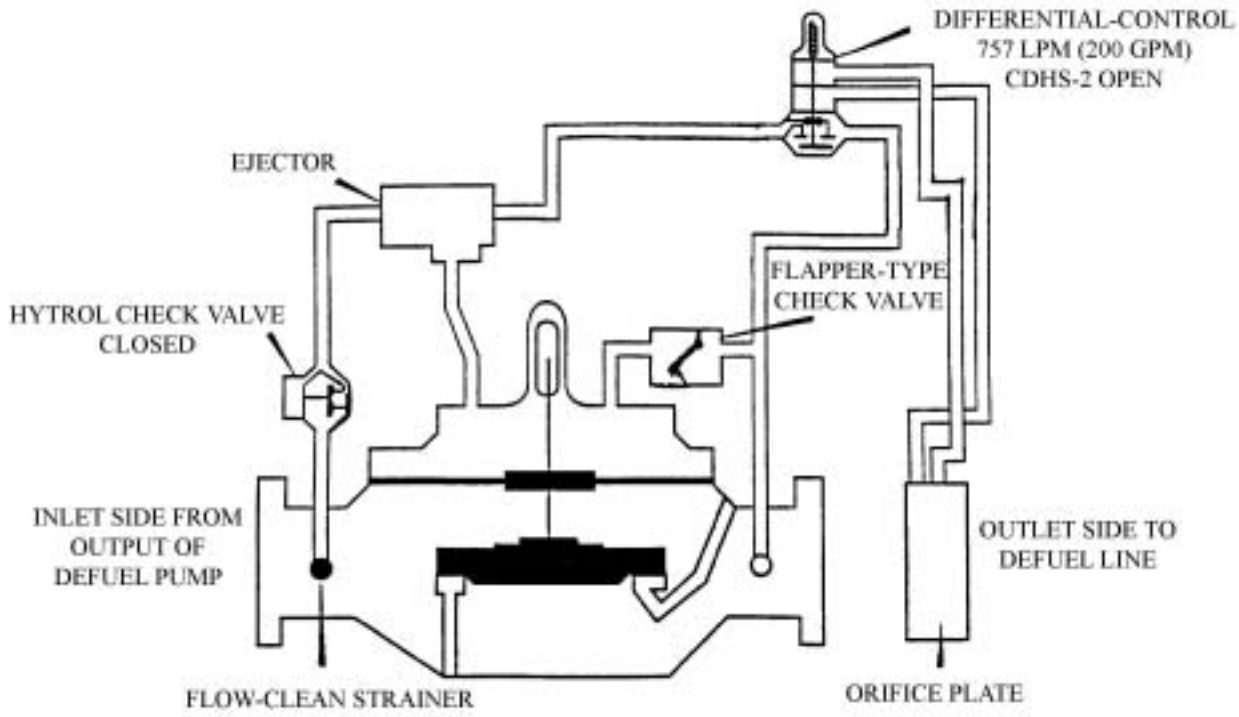


**5.10. Recommended Setting Procedure for Rate-of-Flow Control Valve (41AF).**

5.10.1. With no pressure on the system, back off on the CDHS-2 and stop as soon as spring-tension is lost.

5.10.2. Turn the adjusting screw clockwise two complete turns to get the lowest rate-of-flow setting on the CDHS-2. ***NOTE:*** Never apply pressure to CDHS-2 if the adjusting screw has less than this two-turn setting.

5.10.3. Set up the system to defuel through the 41AF.

5.10.4. Place the magnet on the defuel KISS switch.

5.10.5. Turn the CDHS-2 stem clockwise until you get a flow rate of 757 liters per minute (200 gallons per minute).

5.10.6. Remove the magnet from the KISS switch.

5.10.7. Return the system to its original condition.

**5.11. Defueling Pump.** The defueling pump is installed in the hydrant LCP and used to pump fuel from the aircraft into the designated defuel tank at the pumphouse. The defueling switch at the hydrant outlet controls this pump. The self-priming centrifugal defueling pump (Figure 5.8) differs from a standard centrifugal pump because a vane-type suction pump is mounted on the pump shaft. When the main pump discharge pressure is below 10 psi, the priming pump is in the priming position (Figure 5.9). It draws from the suction side of the pump and discharges at a point downstream of the check valve, so priming the centrifugal pump. When the main pump discharge pressure reaches 10 psi, the priming pump moves into the neutral position.

**Figure 5.8. Self-Priming Centrifugal Defueling Pump.**

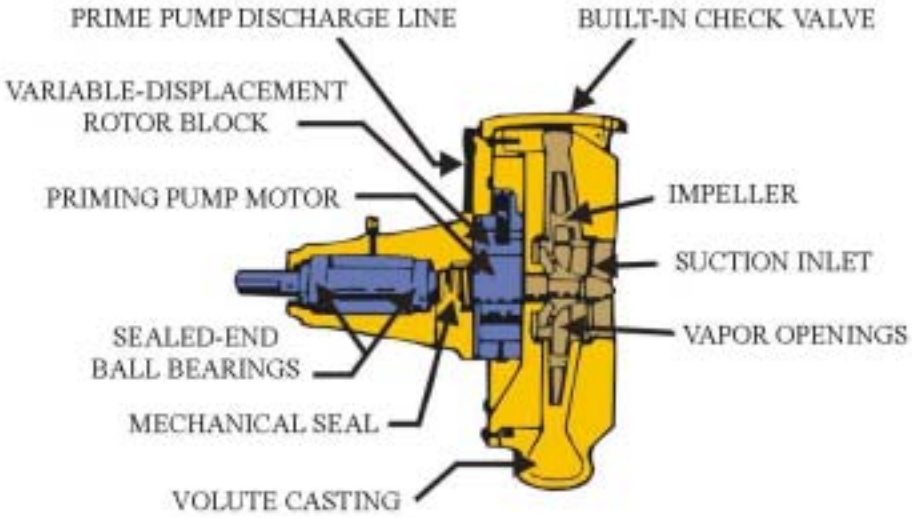


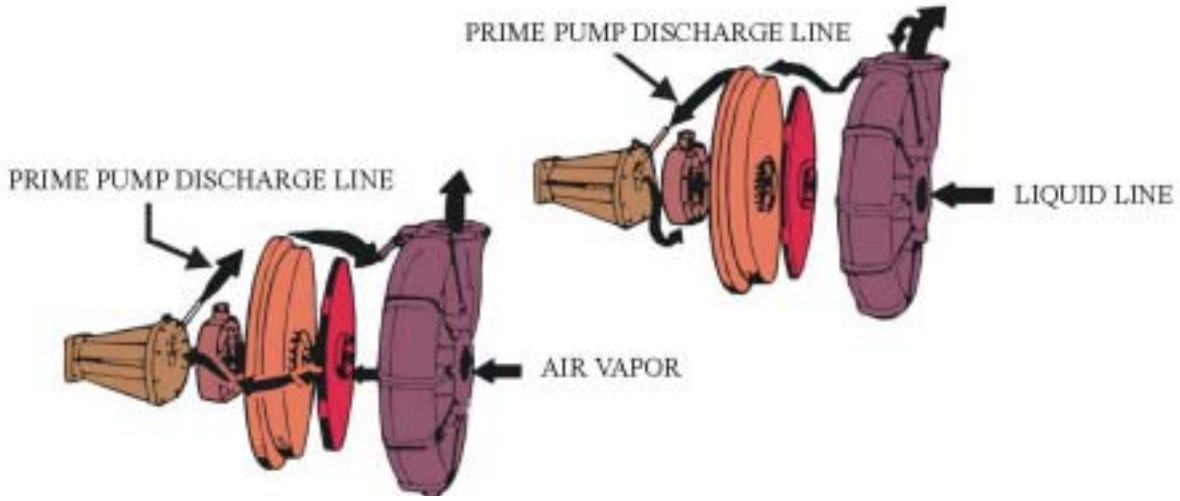


**Figure 5.9. Centrifugal Priming Pump Operation.**

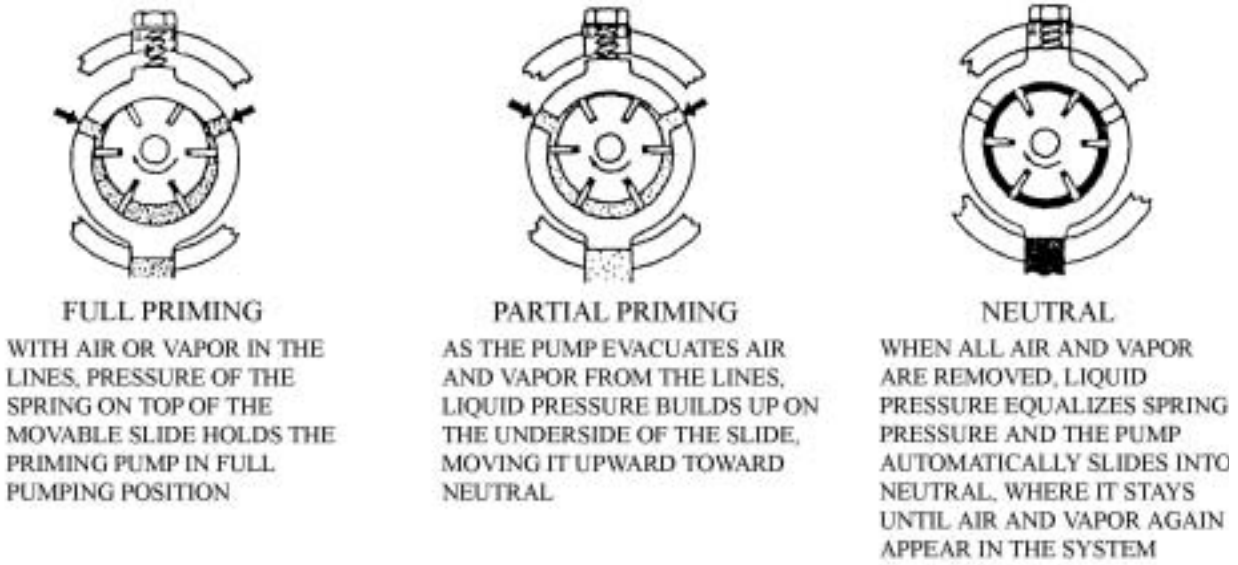

**5.12. Remote Controls (Electrical and Magnetic).** Remote control of fueling, defueling, and emergency stop is performed by a three-element magnetic control KISS switch located near each hydrant pit. A magnet controls each of the three functions. Placing the horseshoe magnet on either the refuel or defuel KISS switch causes the appropriate pump to be energized. Usually a lanyard is attached to the magnet for quick removal. A magnet in the cover over the emergency stop switch holds the switch closed. By lifting the cover, the switch is deactivated and the system shuts down. Spring-loaded covers over the refuel and defuel switches may be removed.

**5.13. Hydrant Adapter and Liquid Control Valve (352AF).**

5.13.1. The 352AF (Figure 5.10) provides a quick pressure-tight connection with the MH-2 hose cart's 351AF moosehead. The 352AF has a float assembly that controls the level of fuel maintained in the piping at the end of defueling. The float keeps air from entering the system.

**Figure 5.10. Hydrant Adapter (352AF).**

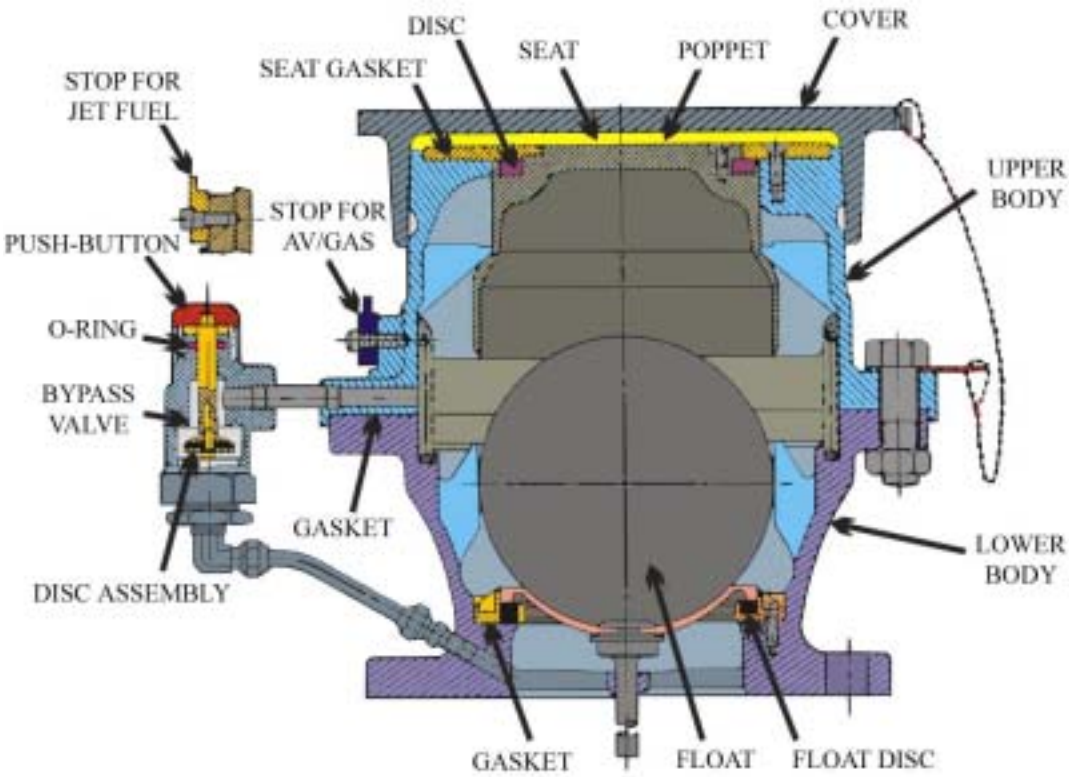


5.13.2. During fueling operations, the 352AF float assembly is lifted from its seat as the float chamber fills with fuel to open the valve. At the end of the defueling operation, the float chamber drains and the float drops to close the valve, preventing air from entering the system.

5.13.3. A replacement poppet kit is available for the Cla-Val 352AF hydrant adapter. This kit must be installed on all adapters to preclude a sticking problem encountered with the original poppet. The poppet face will be stamped as MOD-1 if the kit is installed.

5.13.4. The API 364AF-2 hydrant adapter and its mating moosehead are industry-standard replacements for the hydrant adapter of the 352AF and the 351AF moosehead. Replacing the older

adapters must be a joint economic decision between the BCE and refueling maintenance as hydrants and MH2 hose carts must be modified at the same time.

**5.14. Hydrant Hose Cart.** The MH2 hose cart contains an F/S and meter. Maintenance of hose carts is the responsibility of refueling maintenance.

**5.15. High Level Shut-Off (HLSO).** The 124AF has been upgraded to the 129AF (Figure 5.11) by installing an ejector and ball float assembly. The setting is the same as for a Type I system (279 millimeters [11 inches] from the top of the tank). See Chapter 10 for maintenance frequency.

**Figure 5.11. HLSO Valve (129AF).**

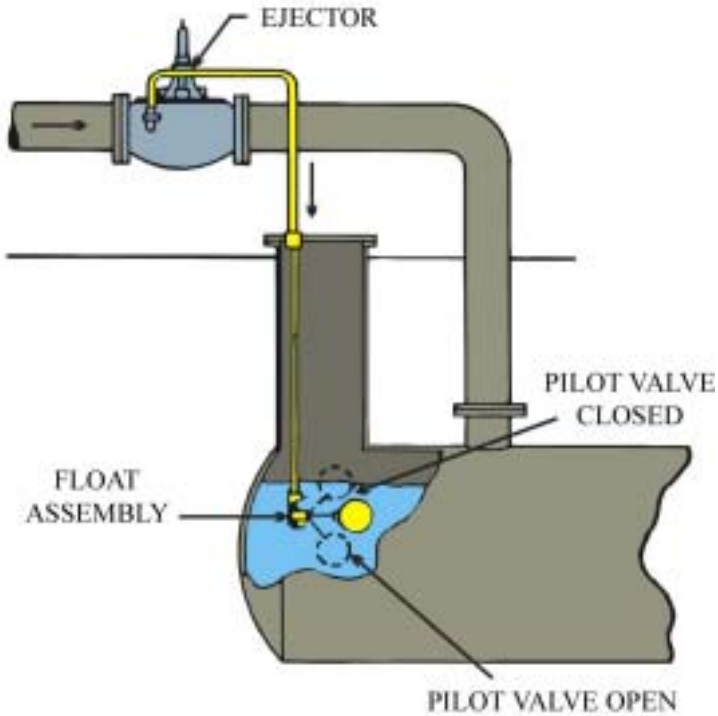


**5.16. Type II Modified (Rapid Flow)**. The Rapid Flow modification was done at some bases to increase defuel rates from 757 to 1135 liters per minute (200 to 300 gallons per minute) to speed the turnaround of KC-135s and other large aircraft. A pump on the aircraft flows fuel from the aircraft through the LCP and into the designated defuel tank. Hydraulic power for the pump comes from operating one engine at idling speed. The defueling pump in the LCP is only used to evacuate the hose cart after the aircraft pump is de-energized.

5.16.1. Combination Dual Rate-of-Flow Control, Solenoid Shutoff and Check Valve (41AF-10). This valve (Figure 5.12) operates the same as the 41AF, with the addition of a solenoid for remote-control operations. All settings and functions are the same as the 41AF.

**Figure 5.12. Combination Dual Rate-of-Flow Control Valve and Solenoid Valve (41AF-10).**

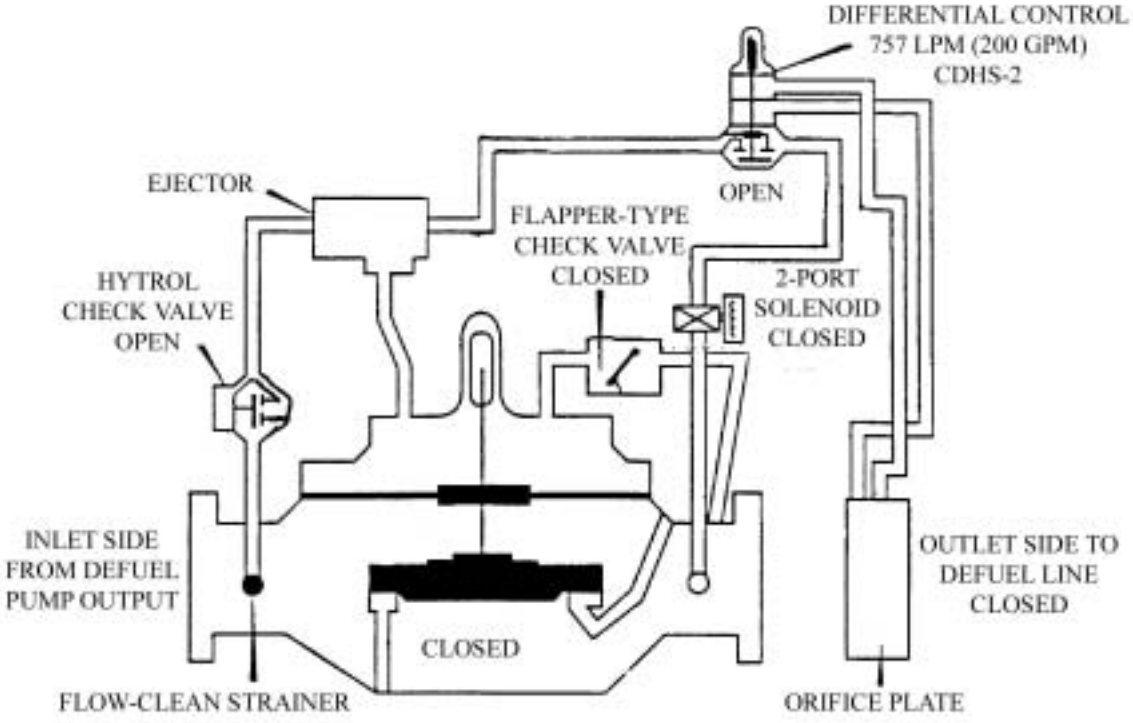


5.16.2. Combination Dual Pressure Relief, Solenoid Shutoff and Check Valve (51AF-4):

5.16.2.1. General. The dual pressure relief valve (Figure 5.13) is installed in the modified hydrant lateral control pit downstream of the refueling control valve between the hydrant lateral pipe line and the defueling line (bypass piping around defuel pump, as shown in Figure 5.1). This relief valve performs two functions: relieves excess pressure in the hydrant lateral piping caused by quick-closing valves during the refueling operation; and maintains a minimum pressure of 5 psi on the hydrant lateral piping when the refueling pumps are not in operation. This valve also has a CV flow control to slowly close the valve during rapid defueling operations.

**Figure 5.13. Dual Pressure Relief, Solenoid Shutoff, and Check Valve (51AF-4).**

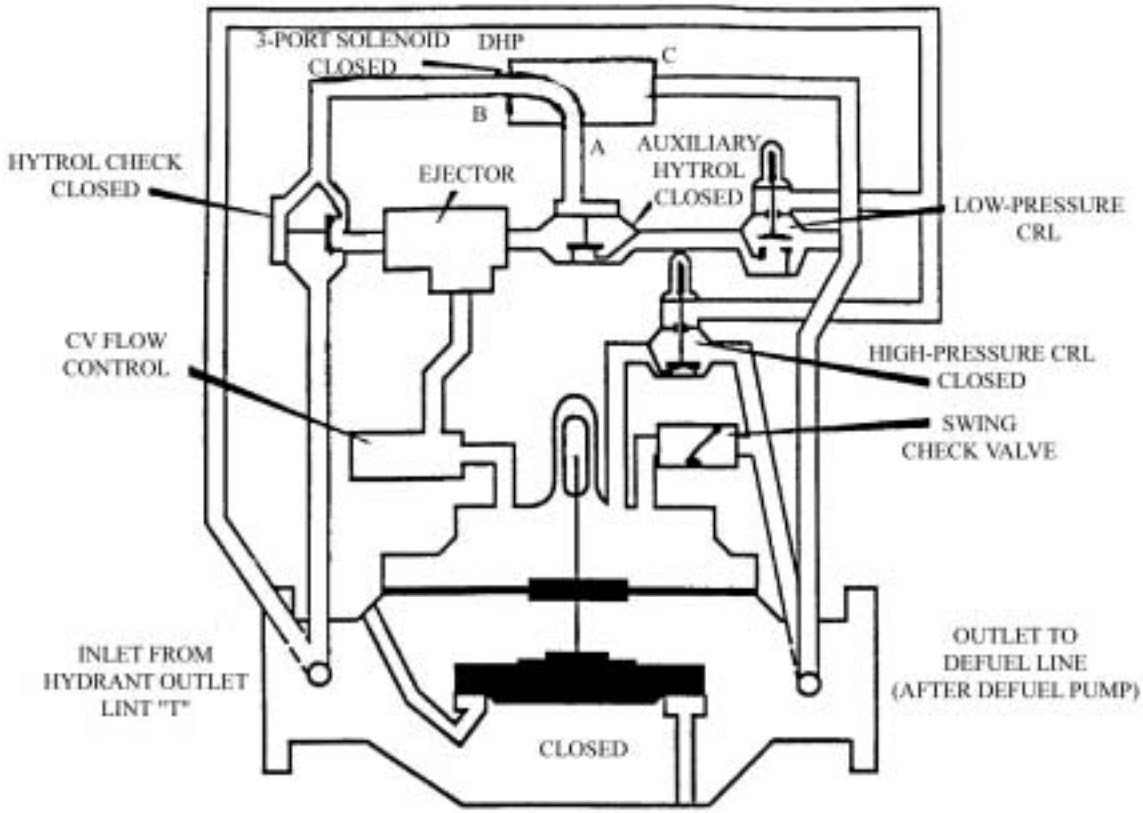


5.16.2.2. Operation. During rapid defueling operations, pressure supplied by the aircraft pumps will open the low-pressure side of the 51AF-4 and provide thermal relief for the hydrant lateral piping. When the refueling pumps are started the solenoid is energized, locking out the low-pressure relief control and putting the valve under the command of the high-pressure relief control.

5.16.2.3. Pressure Setting:

5.16.2.3.1. When the refueling pumps are in operation, set the high-pressure CRL at 5 psi above the 90AF-8 CRL set point.

5.16.2.3.2. When the refueling pumps are stopped, set the low-pressure CRL at 5 psi.

5.16.2.3.3. Adjust the CV flow control closing speed to provide a smooth, pulsation-free operation.

5.16.3. Recommended Setting Procedure for the Combination Dual Pressure Relief, Solenoid Shutoff, and Check Valve (51AF-4).

5.16.3.1. Low-Pressure CRL Setting:

5.16.3.1.1. Place the magnet on the refueling KISS switch to pressurize the system (no hose cart is need for this procedure).

5.16.3.1.2. When system pressure has built up and the refueling control valve (90AF-8) has closed, remove the magnet from the refueling KISS switch.

5.16.3.1.3. The 51AF-4 should open and the system pressure should drop.

5.16.3.1.4. When the 51AF-4 closes, note the pressure gauge reading.

5.16.3.1.5. If the pressure is more than 5 psi, slowly turn the adjusting screw counterclockwise until the pressure drops to 5 psi.

5.16.3.1.6. If the pressure is less than 5 psi, turn the adjusting screw clockwise to raise the CRL setting, then repressurize the system and adjust the CV flow control closing speed to provide a smooth, pulsation-free operation.

5.16.3.1.7. Check the setting by starting and stopping the pump and checking the system pressure.

5.16.3.2. High-Pressure CRL Setting:

5.16.3.2.1. Set up the system to dispense fuel through a hose cart to a truck.

5.16.3.2.2. Bottom the adjusting screw on the 51AF-4 high-pressure CRL.

5.16.3.2.3. Bottom the adjusting screw on the 90AF-8 CRL.

5.16.3.2.4. Place the magnet on the KISS switch to start the deep-well turbine pump.

5.16.3.2.5. Slowly turn the 90AF-8 CRD clockwise until the pressure gauge in the pit reads 5 psi above the normal setting of the 90AF-8 CRL.

5.16.3.2.6. Slowly turn the adjusting screw on the 51AF-4 high-pressure CRL counterclockwise until the valve starts to open.

5.16.3.2.7. Stop and start the deep-well pump to recheck the setting.

5.16.3.2.8. Adjust the 90AF-8 CRD to 5 psi above NOP.

5.16.3.2.9. Adjust the 90AF-8 CRL counterclockwise until you get a 2- to 3-psi drop.

5.16.3.2.10. Adjust the 90AF-8 CRD to NOP.

5.16.3.2.11. Restore the system to original condition.

5.16.4. 358AF Hydrant Adapter. To conduct rapid defueling operations, the float assembly in the 352AF valve was removed. A 3.1-millimeter angle valve was installed in the tapped hole in the body of the hydrant adapter to manually bleed off vapor and air. To prevent air from entering the system when the hydrant is not in use, an X73 aluminum blanking cap, shown in Figure 5.14, has replaced the rubber dust cover. A manual vacuum breaker was installed in the cap to dissipate any vacuum in the adapter so the cap can be removed. This modified valve is called the 358AF hydrant adapter.

**Figure 5.14. X73 Aluminum Blanking Cap.**

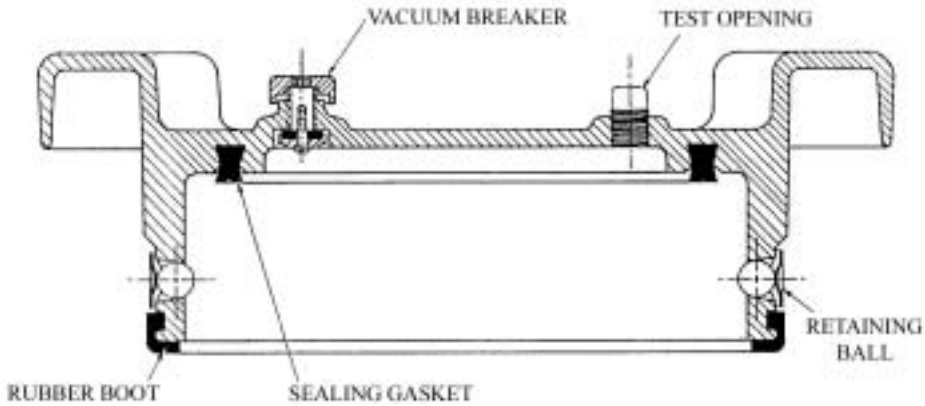

# Chapter 6

## CONSTANT-PRESSURE HYDRANT FUELING SYSTEM, TYPE III (PHILLIPS)

**6.1. General Information.** The constant-pressure hydrant fueling system is the newest system used by the Air Force. It was conceived by the Phillips Petroleum Company in the mid-1950s to refuel military transports and bombers, and has come into extended use since the mid-1980s. The standard Type III system is designed for a maximum of 9085 liters per minute (2400 gallons per minute). Earlier systems were designed as large as 22,712 liters per minute (6000 gallons per minute), but large pipe sizes, low normal flows, and surge problems made these systems impractical. There have been some alterations to this system design, but current standards are in DoD Standard Design 78-24-28-88-AF, *Pressurized Hydrant Fueling Systems Type III*, available for download or in hard copy from the Corps of Engineers, Huntsville Center (http://www.hnd.usace.army.mil). This system is constantly under pressure when energized, and responds automatically to refueling and defueling requirements. Supervision is not required at the pumphouse during the automatic mode if a "pump run" light and emergency shut-off switch are provided at the RCC. Any number of aircraft parked along the fueling loop can receive fuel simultaneously up to the flow capacity of the system. Additionally, aircraft can be defueled while others are refueling. Because the system relies on pneumatically operated valves at the hydrants, the electrical problems encountered with Type I and Type II systems do not exist. The heart of the Type III system is the computer or microprocessor in the pumphouse control room, which controls the component operation. A product recovery tank is provided to collect liquids from pressure reliefs, strainer drains, F/S automatic drains (when used), low point drains, and the operating storage tank water draw-off system. The Type III system has many components similar to those covered in the preceding chapters under the Type I and Type II systems. The system includes filtration, aboveground operating storage, a pumphouse, a control room, hydrant loop, a hydrant servicing vehicle (HSV) check-out stand, and sometimes a fill stand. The pumphouse components include API Std 610 pumps, API horizontal F/Ss, issue and return venturis, both direct-pressure and differential-pressure transmitters (DPT), and automatic control valves. The loop also includes a hydrant control valve (HCV) at each hydrant. A HSV is typically used between the hydrant outlet and the aircraft. Where filtration is not required at the skin of the aircraft, a pantograph is acceptable.

**6.2. Piping.** As aircraft become more sophisticated, it is increasingly important to maintain fuel quality, especially thermal stability. Contact with iron and steel degrades thermal stability; therefore, the use of non-ferrous and coated materials is emphasized. For piping from the receipt F/S to the issue F/S, only coated carbon steel, stainless steel, or aluminum (if not buried) may be used. For hydrant systems, use stainless steel pipe downstream of the issue F/Ss. The F/S removes fuel degradation products and degraded coating particles before they enter the loop. Stainless steel prevents fuel deterioration and protects thermal stability. ***NOTE:*** All underground metal piping must be protected by exterior coating and cathodic protection. In making pipeline repairs, take care when replacing or repairing coatings. Even the most minuscule break in a coating can be a starting point for corrosion. Be aware that buried stainless steel corrodes faster than carbon steel and must be treated carefully.

**6.3. Receiving and Storage.**

6.3.1. Receiving Equipment. Typically, fuel is received at the base fuel storage area then delivered to the Type III system by pipeline (Figure 6.1). Fuel enters the system through a 40-mesh strainer upstream of the receipt F/S. This strainer is equipped with a piston-type DP gauge and a bottom drain piped into a product recovery tank. The maximum allowable DP across the strainer is 10 pounds per square inch differential. At 10 pounds per square inch differential, the operator must open and clean the strainer. Once the fuel passes through the strainer, it moves through the receipt F/S or bypass valve (BPV). The F/Ss are piped in parallel with a BPV and manifolded together. The receipt F/S is an API 1581, Group II, Class B, and rated at 2271 liters per minute (600 gallons per minute) each. The FSCV will close and the BPV will open automatically when the separator DP reaches 15 pounds per square inch differential. After flowing through the receipt F/Ss or the BPV, fuel passes through the 4542.4-liter-per-minute (1200-gallon-per-minute) meter, and then through the HLSO valve into the operating storage tanks.

6.3.2. Storage Tanks. (See Figure 6.1.) Operating storage tanks have a cone roof, aluminum honeycomb floating pan, and a 5% sloped floor to a center sump. These tanks are fully coated inside. Existing storage tanks may be used as operating tanks when the distance from the Type III fueling apron to the tanks is less than 1.6 kilometers and they are upgraded to the latest design standards for operating storage tanks. New tanks must be constructed when the distance exceeds 1.6 kilometers. Provide two tanks for each hydrant fueling system. Operating tanks typically have a capacity of 2500 barrels, 5000 barrels, or 10,000 barrels. Overseas, operating tanks are typically cut-and-cover tanks (field-constructed underground storage tanks).

6.3.2.1. High-Level Alarm (HLA). (See Figure 6.1.) An HLA is installed on each tank to show when the tank is full and further filling should stop. It is set to alarm just before the HLSO valve closes to stop flow into the tank. When actuated, the HLA window on the pump control panel (PCP) flashes and a vibrating alarm sounds. After the operator acknowledges the alarm, the audio alarm stops and the visual warning becomes steady. Once the fuel level drops below the HLA setting, the visual warning deactivates.

6.3.2.2. HLSO Valve (413AF-5A). Each operating storage tank is equipped with a HLSO valve on the fuel inlet line and a float assembly at the tank high-level shut-off point (Figures 6.1 and 6.2). When the tank fuel level reaches the float assembly, located on the side of the tank, the float assembly directs fuel to the HLSO valve control loop, causing the HLSO valve to close and stop the flow of fuel into the tank. The HLSO valve is equipped with a check feature to prevent reverse flow. The float assembly also has a manual tester so the rotary disc assembly and the HLSO valve-closing feature can be checked without filling the tank with fuel. Some HLSO valves have a closing speed adjustment.

**Figure 6.1. Type III, Constant-Pressure Hydrant Fueling System.**

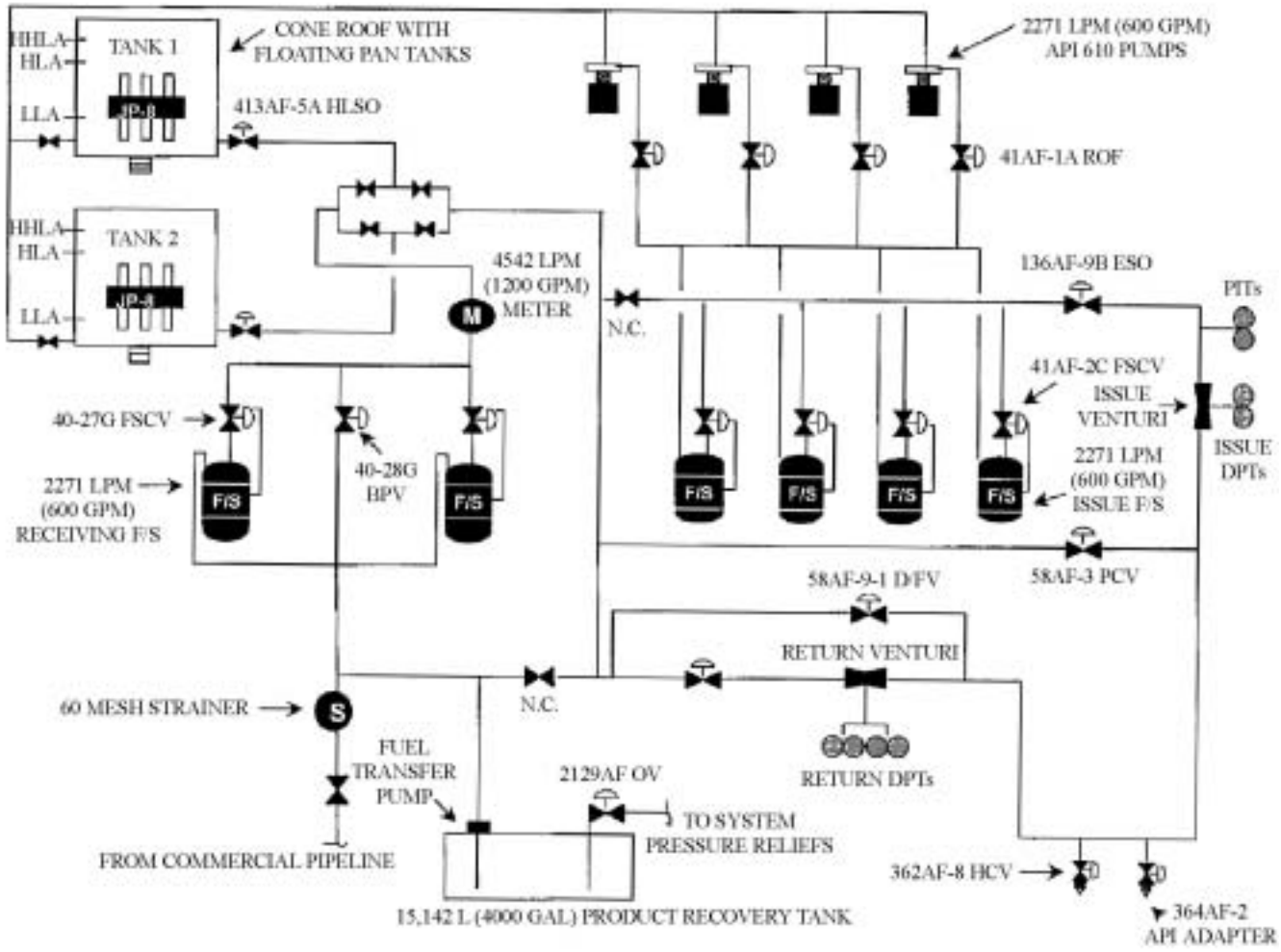

**Figure 6.2. HLSO Valve (413AF-5A).**

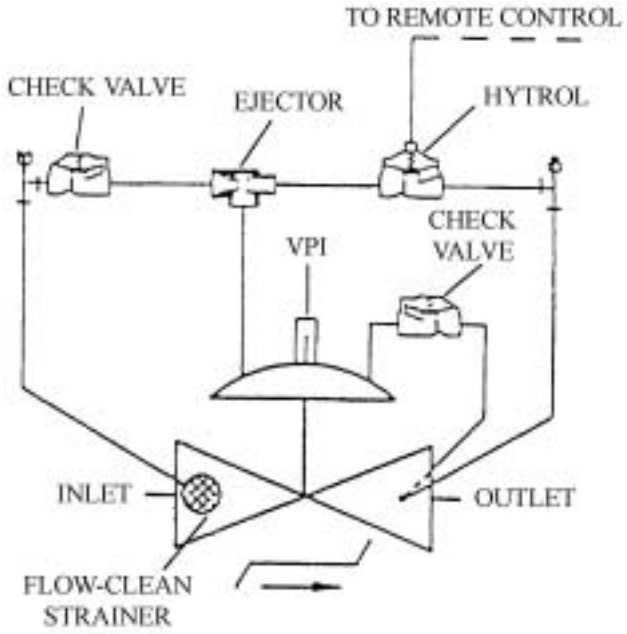


6.3.2.3. High-High-Level Alarm (HHLA). The float assembly for this alarm is above the HLSO valve float assembly and below the tank overflow vents. This alarm indicates that both the HLA and the HLSO have been ineffective and the tank is about to overflow. It actuates a flashing HHLA window on the PCP and a resonating horn. After acknowledgment, the horn stops and the window stops flashing, but stays lit until the level drops below the HHLA.

6.3.2.4. Low-Level Alarm (LLA). Each operating storage tank is equipped with a low-level float assembly at the bottom of the tank. The LLA and shut-off switch controller will cause a visual alarm at the annunciator panel and resonating alarm, and shuts down all fueling pumps when the fuel level drops to the predetermined level.

6.3.2.5. HLA Test Procedure. Manually test the HLA and HHLA by isolating the float assembly from the tank and filling it slowly with fuel until the HLA sounds the vibrating horn and the HHLA sounds the resonating horn. Both alarms will activate visual alarms on the annunciator panel. An audible alarm should also sound outside the building for both control systems. After testing, drain the fuel from the float assembly through the drain valve before opening the tank isolation valves. This prevents fuel from draining into the tank above the floating pan.

6.3.2.6. LLA Test Procedure. Test the LLA by isolating the float assembly from the tank and draining it until the resonating horn and the visual alarms are activated at the annunciator panel and outside the building. After testing, close the drain line and reopen the tank isolation valves.

6.3.2.7. Automatic Tank Gauges (ATG). All tanks handling jet fuel will have ATG installed. This system is used for transfer and inventory control. The Petrol Ram division of the Air Force Petroleum Office (AFPET), Fort Belvoir, Virginia, is the DoD agent for acquiring these systems. Because of unique software requirements and the need to interface with the DoD Fuels Accounting System (FAS), alternate systems must not be installed.

6.3.2.8. Outlet Valves. Each tank has a manual DBB valve at the tank outlet. In the Type III system, one outlet valve must be open and one closed for the system to operate. The tanks are equipped with a limit switch that illuminates a light on the system display panel that shows if the

valve is open or closed. The microprocessor also uses this signal to find which tank should be monitored for low-level conditions. The outlet lines from the tanks feed the pump suction manifold in the pumphouse.

**6.4. Pumphouse.** This paragraph covers the pumphouse components, and will trace the flow of fuel through the system during a refueling operation.

6.4.1. Fueling Pumps. Refueling pumps are 2271 liters per minute (600 gallons per minute), single-stage centrifugal, horizontally mounted, vertical or radial split case, enclosed impeller, with end suction and top vertical discharge conforming to API Std 610. They are statically and dynamically balanced for all flow rates, from no flow to 120% of the designed rate.

6.4.2. Flow Switches. Typically, open flow switches are installed downstream of each pump discharge. When there is flow, a vane in the pipeline is raised, rotating the attached shaft and closing the double-pole double-throw snap-action switch, allowing the pump to continue to run. If flow is not established within a preset time, the microprocessor calls off the unresponsive pump and calls on the next pump in the start-up sequence.

6.4.3. Rate-of-Flow, Nonsurge Check Valve (41AF-1A).

6.4.3.1. This valve (Figure 6.3) is very similar to the nonsurge check valve used in Type I and II systems, except it also provides flow control by using an orifice plate and DP controller. The flow control is typically set for 2460 liters per minute (650 gallons per minute) to keep the pump from operating outside its pump curve when one pump discharges into multiple F/Ss.

**Figure 6.3. Rate-of-Flow Nonsurge Check Valve (41AF-1A).**

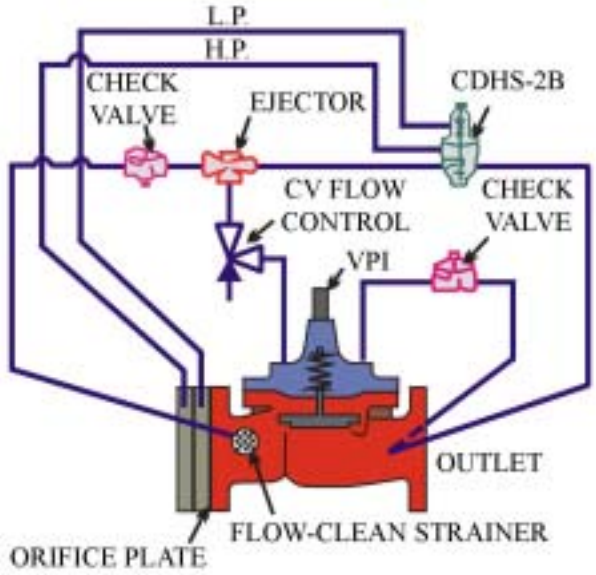


6.4.3.2. Valve Setting. Set the CDHS-2B rate-of-flow control by turning the adjusting stem clockwise to increase the fuel rate of flow and counterclockwise to decrease it. The valve should be set for about 2460 liters per minute (650 gallons per minute). The valve-opening rate is set by adjusting the CV flow control. Turn the CV flow-control adjusting stem clockwise to make the main valve open slower and counterclockwise to make the valve open faster. Set the valve to open

slowly so pressure surges do not damage the F/S and downstream equipment. The main valve should open in about 20 seconds.

6.4.4. F/Ss. F/Ss are provided on both the receipt and issue side of Type III system storage tanks. Issue F/Ss are manifolded together and share the discharge line from the issue pumps. These F/Ss are rated for 2271 liters per minute (600 gallons per minute). See Chapter 3 for a detailed description.

6.4.5. FSCV (41AF-2C).

6.4.5.1. The only difference between the 41AF-2C (Figure 6.4) and the 40AF-2C (Figure 5.3), used on the Type II system, is the 41AF-2C has check valves installed to prevent reverse flow. The valve still controls the rate of fuel flow and closes when excess water is detected in the F/S. Most bases have deactivated the water shut-off feature.

**Figure 6.4. F/S Control Valve (41AF-2C).**

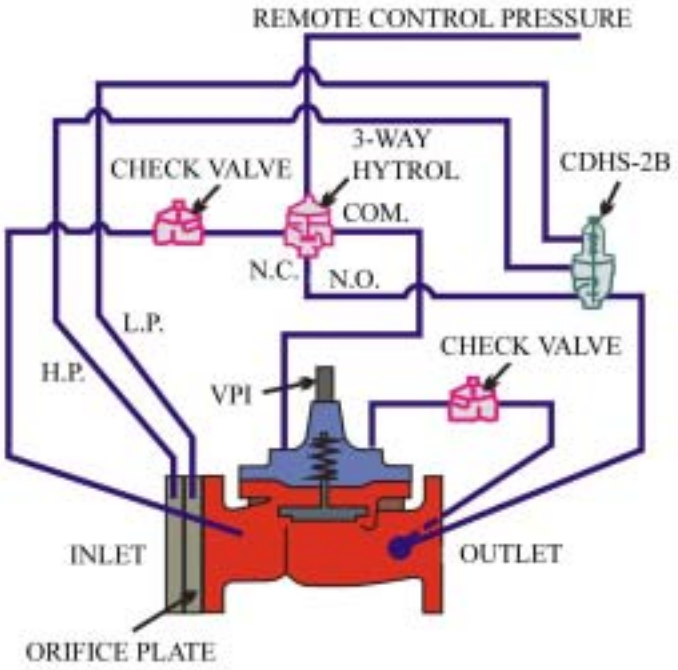


6.4.5.2. Valve Settings. With one pump running and fuel flowing through one separator, turn the CDHS-2 adjusting stem clockwise to increase the fuel flow through the valve and counterclockwise to decrease it. Use the issue DPT to adjust the flow to about 2271 liters per minute (600 gallons per minute).

6.4.6. Emergency Shut-Off (ESO) Valve (136AF-9B):

6.4.6.1. The ESO valve (Figure 6.5) has two solenoids that are energized when power is on, enabling the main valve to open when there is fuel flow. Should power fail or an emergency stop button be pushed, the solenoids will de-energize and the main valve will close within 10 seconds. The valve also has a thermal relief feature that relieves excess cover chamber pressure back to the valve inlet. Lastly, a differential relief is used to maintain a relatively constant DP between the inlet and outlet of the main valve. The ESO valve feature is performed by alternate means for designs completed since 1999.

**Figure 6.5. ESO Valve (136AF-9B).**

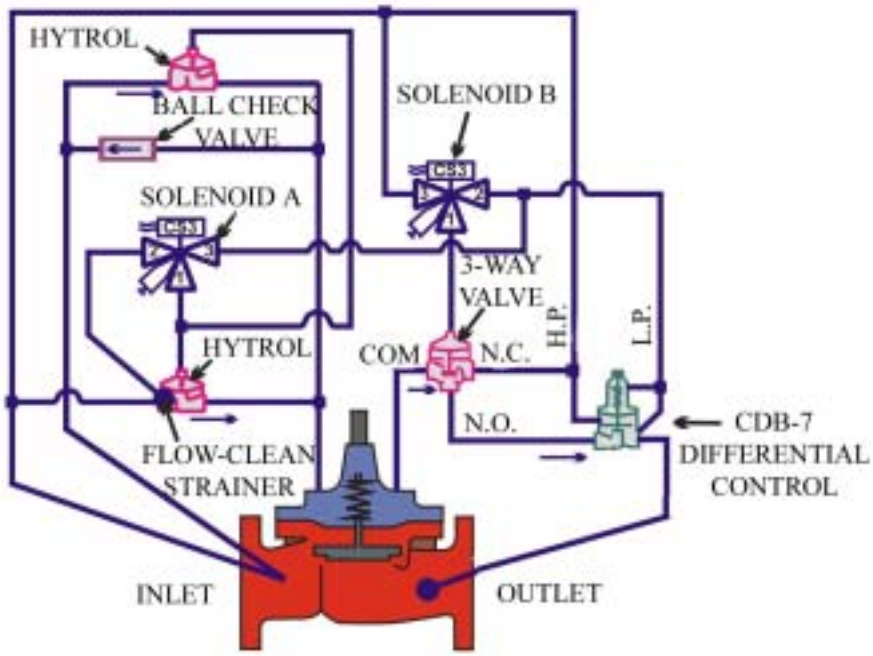


6.4.6.2. Valve Setting. Turn the adjusting stem of the CDB-7 clockwise to increase the DP and counterclockwise to decrease it. The DP should be about 10 psi.

6.4.7. Issue Venturi. The 254-millimeter (10-inch) issue venturi is downstream of the ESO valve and is typically rated at 9085 liters per minute (2400 gallons per minute). It is similar to an orifice plate in operation but is much more accurate. It has four 12.7-millimeter connections for piping in the DPTs. Using signals from the DPTs, the microprocessor measures issue flow with the return-flow venturi, and controls starting and stopping of the sequential pumps.

6.4.8. Pressure Indication Transmitter (PIT). Two PITs are connected directly to the main issue line just downstream of the ESO valve. The PITs read system pressure between 0 and 250 psi. The microprocessor is programmed to call on the lead pump when system pressure drops below 60 psi and call it off when system pressure reaches a preset pressure between 135 and 175 psi. The microprocessor uses the 4- to 20-milliampere signals from these two transmitters to turn the lead pump on or off. This signal is directly proportional to the pressure being measured. Calibrate the PIT with a manometer; the digital type is recommended. Refer to the manufacturer's instructions for details.

6.4.9. DPT. DPTs measure DP across the venturi and have displays that express flow in gallons per minute. There are two DPTs connected to the issue venturi (the range is 0 to 9085 liters per minute [0 to 2400 gallons per minute]) and four connected to the return venturi. Two of the four are for low flows with a range of 0 to 379 liters per minute (0 to 100 gallons per minute) and the remaining two are for high flows with a range of 0 to 3028 liters per minute (0 to 800 gallons per minute). The microprocessor uses the 4- to 20-milliampere signals from these six transmitters to turn sequential pumps on or off. This signal is directly proportional to the DP being measured. Calibrate the DPTs with a manometer; the digital type is recommended. Refer to the manufacturer's instructions for details.

6.4.10. Hydrant Loop. After leaving the issue venturi, fuel flows through the hydrant loop back to the operating storage tank. The loop is under the parking apron with a hydrant control pit at each

fueling point. In the automatic idle mode the loop is under constant pressure (75 psi) and protected from thermal expansion by relieving excess pressure to the operating storage tank. A drop in system pressure to 60 psi causes the lead pump to be energized. Because the hydrant loop is very long, high-point vents and low-point drains are provided throughout. The number and location of hydrant outlets are based on the types of aircraft and mission fueling requirements. The hydrant pit is molded fiberglass with a counterbalanced aluminum cover. It opens to 90 degrees and requires 133.4 newtons (30 pounds force) to open it and 222 newtons (50 pounds force) to close. Most new covers are designed to be watertight. Pipe penetrations in the pit are sealed by Buna-N boots clamped to the pipe. The hydrant riser is either 101 millimeters for 2271-liter-per-minute (600-gallon-per-minute) flows or 152 millimeters for 4542.4-liter-per-minute (1200-gallon-per-minute) flows. An appropriately sized ball valve is installed before the HCV.

6.4.11. HCV (362AF-8):

6.4.11.1. The HCV (Figure 6.6) provides a constant nozzle pressure and relieves excess pressure. An air-sensing line is connected from the HSV to the HCV three-way hytrol. When the HSV's pneumatic deadman is depressed, air is supplied to the three-way hytrol, allowing the valve to open. A fuel-sensing line is connected from the HSV venturi to the pressure-reducing control (CRA) and the CRL on the 362AF-8. The venturi is calibrated to provide the same pressure as the actual nozzle pressure at the skin of the aircraft. The CRA maintains 45 psi at the nozzle. The HCV is designed to close rapidly when the nozzle pressure exceeds the 50-psi setting of the CRL. It reopens when the pressure drops below this set point.

**Figure 6.6. HCV (362AF-8).**

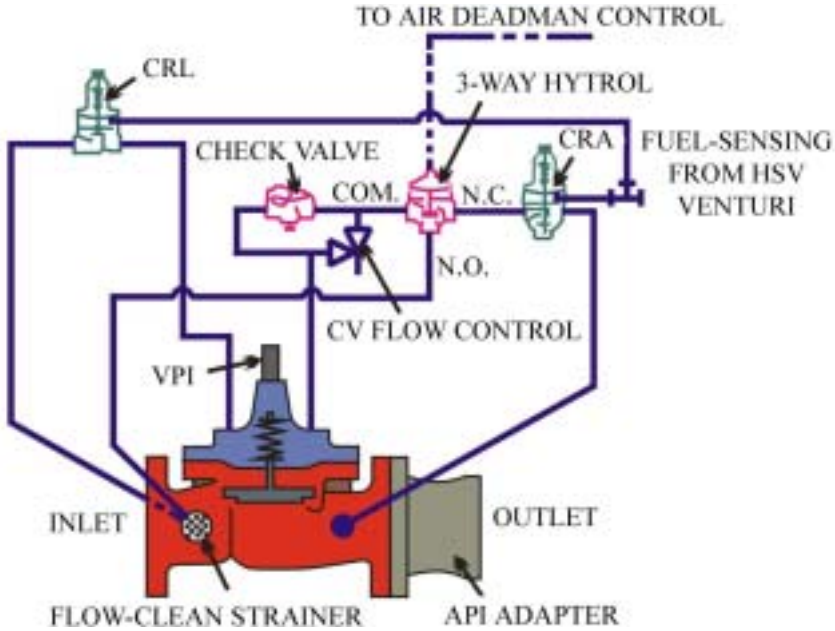


6.4.11.2. Valve Setting. Typical settings for the CRA is 45 psi and CRL is 50 psi. Set these controls by turning the adjusting stem clockwise to increase pressure and counterclockwise to decrease pressure. After establishing fuel flow through the HSV to a refueling truck, bottom the CRL on the 362AF-8. Adjust the CRA to 50 psi and turn the CRL adjusting stem counterclockwise until the valve begins to close. Next, turn the CRA counterclockwise until the nozzle pressure drops to 45 psi. The main valve opening speed is adjusted by turning the CV flow-

control adjusting stem clockwise to make the valve open slower and counterclockwise to make the valve open faster. Most valves are set for about 20 seconds; however, to dampen the nozzle pressure wave, the opening speed may need to be retarded. ***NOTE:*** An HCV is also located at the HSV check-out stand.

6.4.12. HSV. The Brooks valve on the HSV serves as a secondary CRL if the nozzle pressure reaches 55 psi. The air pressure setting on the HSV dictates the set point of the Brooks valve. The air pressure must be set 10 psi above the pressure relief setting required by the Brooks valve. Setting the air pressure at 65 psi will close the Brooks valve at 55 psi. The HCV will close within five seconds if a pneumatic hose ruptures and bleeds air from the system. For newer HSVs, the pressure-setting procedures may be different; refer to the manufacturer's instructions. The HCV is equipped with an API adapter (364AF-2).

6.4.13. Return Venturi. The 101-millimeter return venturi is upstream of the back-pressure control valve (BPCV). It is similar to the issue venturi but is rated at 3028 liters per minute (800 gallons per minute).

6.4.14. BPCV (58AF-9):

6.4.14.1. The BPCV (Figure 6.7) set point is 100 psi, measured at the inlet of the furthest hydrant outlet. It modulates to maintain loop pressure at the set point. The valve also prevents reverse flow. This 152-millimeter valve has a solenoid that is energized when the lead pump is called on and is de-energized when the system starts the shut-down sequence. When the solenoid is energized the valve is enabled, meaning the valve opens and closes as the CRL dictates. When it is de-energized the valve closes.

**Figure 6.7. BPCV (58AF-9).**

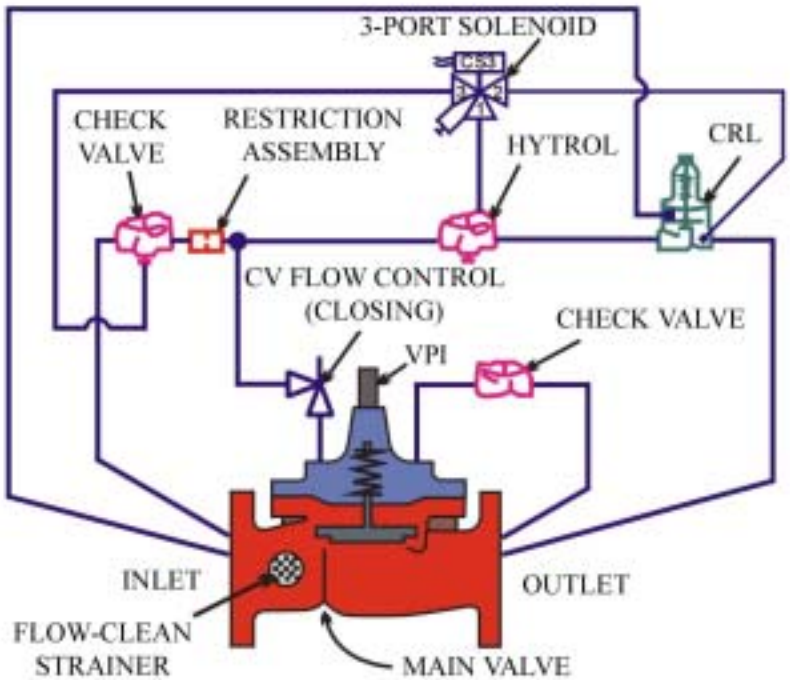


6.4.14.2. Valve Setting. Place a person at the furthest hydrant outlet with a means of communicating with the person at the BPCV. To establish 100 psi at the furthest hydrant outlet,

turn the BPCV CRD adjusting stem clockwise to increase pressure and counterclockwise to decrease pressure.

6.4.15. Defuel/Flush Valve (D/FV) (58AF-9-1):

6.4.15.1. This valve (Figure 6.8) is controlled by two different solenoids: solenoid A controls the defuel portion of the main valve and holds the valve closed any time a fueling pump is running; solenoid B controls the flush portion of the main valve and functions only when the system is placed in the flush mode. When the lead pump de-energizes, solenoid A energizes, allowing the valve to open and drop the system pressure to 80 psi. While the system is in the idle position, the valve will open to allow defueling when the hydrant loop pressure rises above 80 psi. Defueling is conducted by using the HSV to pump the fuel off the plane and force the fuel into the hydrant loop at a rate of 1135 liters per minute (300 gallons per minute) and 165 psi. 165 psi will overcome the 80-psi setting of the 58AF-9-1 D/FV and the valve opens. Solenoid B energizes only when the system is placed in the flush mode. The reason for system flushing is to move fuel through the pipeline as fast as possible and clean the loop. With the system in the flush mode, energize all available fueling pumps by placing the pumps' Hand-Off Auto switch in the "Hand" position to get the maximum meter-per-second (foot-per-second) flow in the hydrant loop. The 58AF-9-1 D/FV valve opens, allowing the maximum amount of fuel to flow through the system.

**Figure 6.8. D/FV (58AF-9-1).**

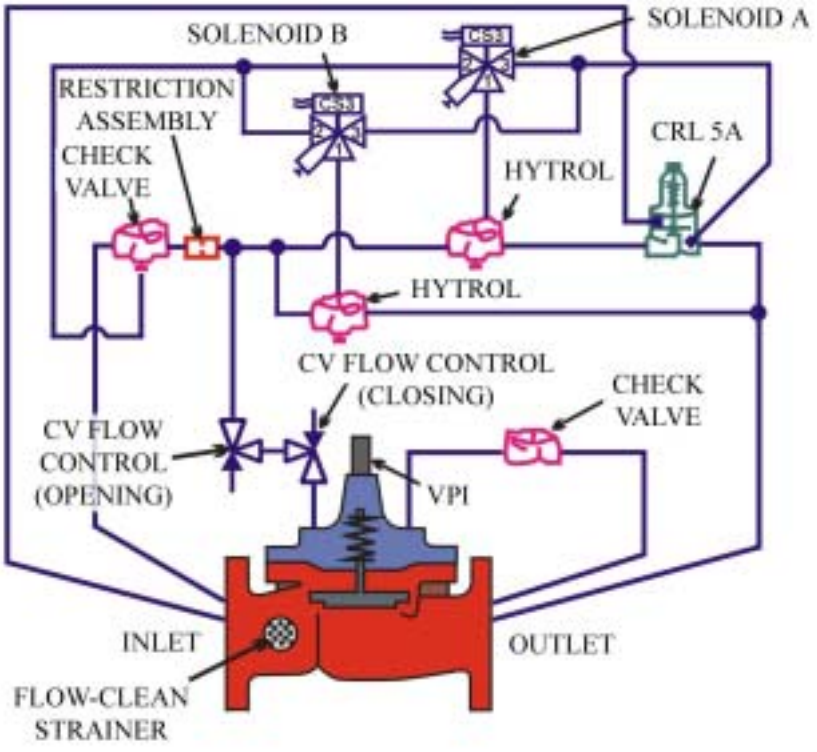


6.4.15.2. Valve Setting. Close the manual valve upstream of the 58AF-3, Pressure Control Valve (PCV) to ensure system pressure does not flow through the valve while adjusting the D/FV. Bottom the CRL on the D/FV. Place the system in automatic mode and pressurize the system. When the system shuts down, turn the CRL adjusting stem on the D/FV counterclockwise until the

gauge reads 80 psi. Repressurize the system to check the setting. When complete, reopen the manual valve upstream of the PCV.

6.4.16. PCV (58AF-3).

6.4.16.1. This 50.8-millimeter valve (Figure 6.9) reduces system pressure down to 75 psi during the system shutdown process and provides thermal relief during idle periods. The valve has a solenoid that is energized to close the valve when a pump is running and de-energizes when the lead pump de-energizes. When de-energized, the valve opens to reduce the system pressure to 75 psi and the thermal relief function is operable. If the pressure rises above 75 psi, the valve opens and the excess pressure flows to the immediate operating storage tank. The valve opening and closing speed controls are typically set at three seconds. In some cases, to prevent valve chattering, the PCV pressure-sensing line is connected to the large defuel/flush line.

**Figure 6.9. PCV (58AF-3).**

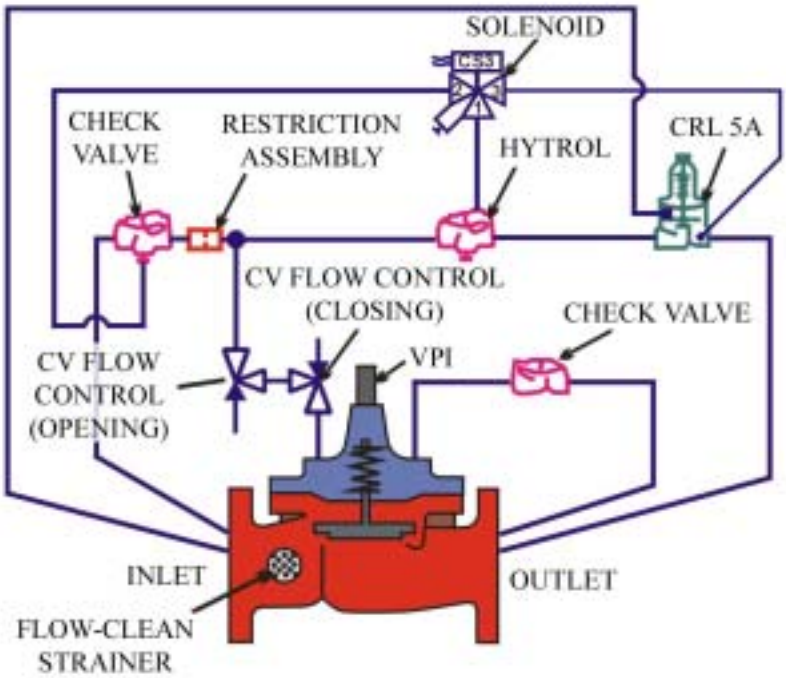


6.4.16.2. Pressure Setting. Bottom the PCV 58AF-3 CRL. Place the system in the automatic mode and pressurize the system. When the system shuts down, turn the CRL adjusting stem on the PCV counterclockwise until the gauge reads 75 psi. Repressurize the system to check the setting.

6.4.17. HSV Check-Out Stand. The check-out stand consists of a 362AF-8 HCV with a 364AF-2 API adapter, four 63.5-millimeter (2.5-inch) single-point receptacles (SPR), and an emergency stop switch. The HCV is piped into the hydrant loop just downstream of the issue venturi. The HSV check-out stand is used to perform daily checks of the HSV before using it to service aircraft.

## 6.5. Product Recovery System.

6.5.1. Tank Design. The product recovery tank is a 15,141-liter (4000-gallon) double-walled steel tank with an interstitial leak monitor. The annular space provided between the primary and secondary

tank walls allows the free flow and containment of all leaked product from the tank. The leak detection system attached to the interstitial monitor is either vacuum maintenance, positive air pressure maintenance, hydrostatic pressure maintenance, or probe detection. Monitoring is continuous and indicated in the pump control room. The control console generates a visual and audible alarm if a leak is detected. The audible alarm has a remote alarm annunciator that can be heard around the system.

6.5.2. Pumps. The fuel transfer pump for the product recovery tank is a deep-well turbine pump with a capacity of 189 liters per minute (50 gallons per minute) when driven at 1800 revolutions per minute. It can be automatically or manually operated. In the automatic mode, the float switch assembly operates the pump. The switch is either a magnetically latching reed or a mercury-actuated switch that operates on 120 volts, 60 hertz, AC power. When the tank is 70% full, the switch assembly automatically energizes the pump. Fuel is then routed through the receiving separators and into the operating storage tanks. Once the fuel level is pumped down to 20% full, the pump shuts off. If the pump fails to start and the tank reaches 80% full, the switch assembly sounds an alarm. ***NOTE:*** The overfill valve (OV) will be mechanically activated to close at 80%. This tank also has a hand-operated pump for removing water.

6.5.3. Product Recovery Piping System. The entire product recovery system consists of 19- to 50-millimeter (0.75- to 2-inch) piping routed throughout the Type III system. This piping connects the pressure relief, water draw-off, some low/high-point drains, and F/S water drains to the product recovery tank fill line that is equipped with a hydraulically operated OV.

6.5.4. Product Recovery Tank OV (2129AF). The OV is a diaphragm-operated angle valve located on the fill line of the product recovery tank (Figure 6.10). This valve closes any time the liquid level in the tank reaches 80% full. It uses a float assembly similar to the float assembly used on all belowground storage tanks. This float also has a manual test lever designed to test the operation of the 2129AF valve. When the 2129AF valve is open, a limit switch illuminates a green light on the PCP graphic display. A red light illuminates and a vibrating horn will sound when the valve is closed. This valve uses a pressure reservoir tank connected to the discharge of the product recovery tank fuel transfer pump. The fuel transfer pump supplies pressure to the pressure reservoir and a check valve system holds the pressure in the reservoir. A supply line from the pressure reservoir is connected to a rotary disc assembly in the float. When the tank is less than 80% full, the float is in the bottom position, aligning common supply with port 2 and common drain with port 1. In this position the pressure maintained in the pressure reservoir is applied to the 2129AF sensing chamber. Since the cover chamber of the main valve is vented through the common drain of the float assembly, the pressure in the sensing chamber overcomes spring tension on top of the diaphragm, holding the valve in the fully open position. When the tank is 80% full, the float rises, aligning the common drain to port 2 and common supply with port 1. Since the sensing chamber is now vented and pressure from the pressure reservoir is applied to the main valve cover chamber, the main valve closes.

**Figure 6.10. OV (2129AF).**

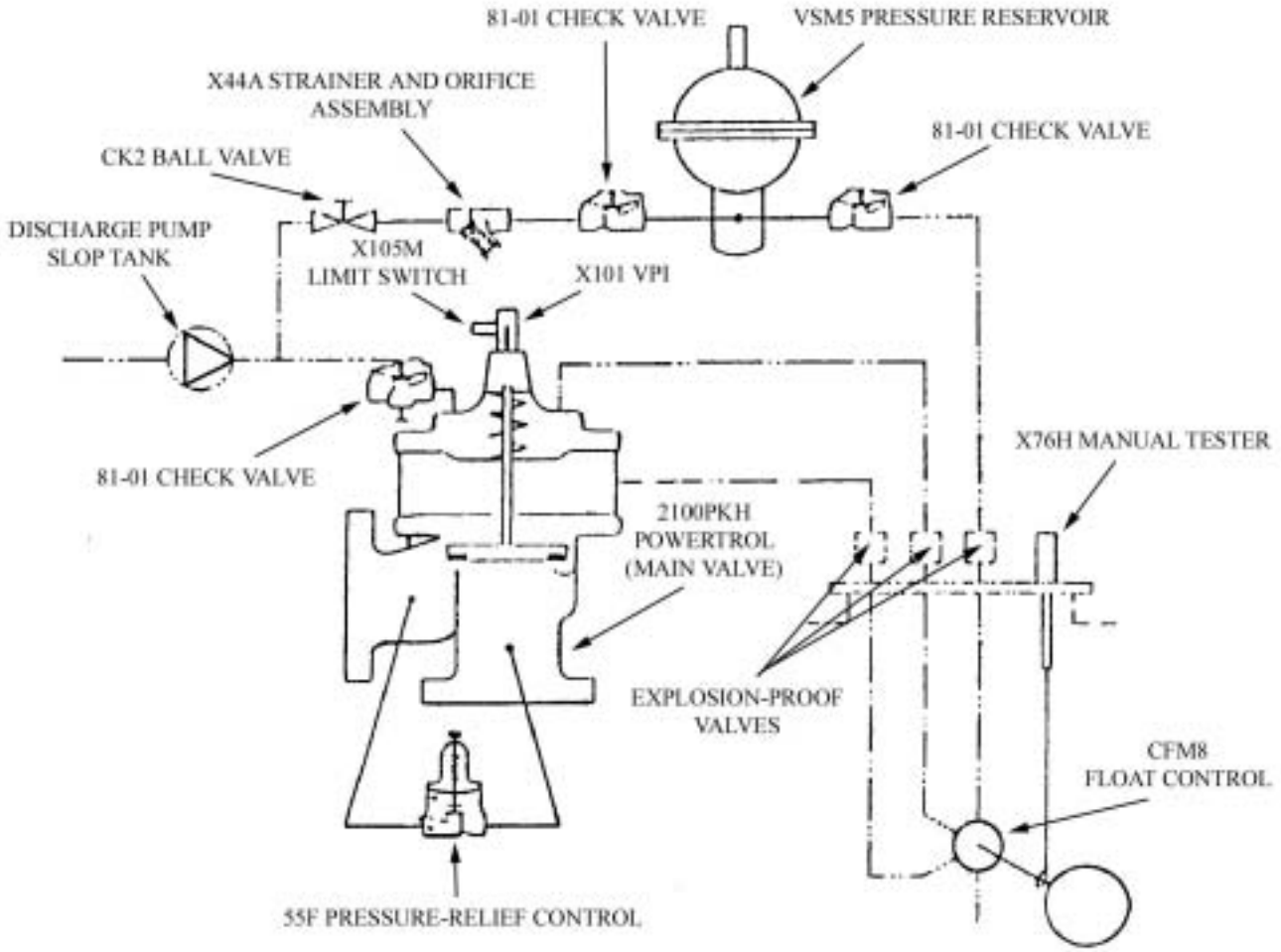


6.5.5. Thermal Relief. Because the 2129AF would be held shut when the tank is 80% full, there is a means of relieving excessive pressure in the product recovery piping system. This is done by a CRL piped into the inlet and outlet of the 2129AF main valve body. When the product recovery piping system pressure reaches 200 psi, the pressure relief control opens and allows the excess pressure to bleed around the overfill valve.

6.5.6. Pump Control Room. The pump control room contains the PCP and the motor control center (MCC).

6.5.7. PCP. The PCP is the heart of the Type III system. It contains the two microprocessors, graphic display annunciator panel and alarms, pressure/flow recorders, and operator controls.

6.5.7.1. Graphic Display. The graphic display shows the layout of the system in a line drawing format. Green lines show receiving and hydrant loop return lines and yellow lines show pump suction from the storage tank discharge lines to the pump inlets. Yellow lines also show water draw-off lines from the F/Ss and pressure relief valves which go to the product recovery tank. Blue lines are the pump discharge and hydrant loop, including the BPCV, PCV, and the D/FV. Green and red lights show which valves are open and or closed and which pumps are operating. A digital readout shows the fuel level in each tank in tenths of an inch. If fuel is being received, a digital counter shows the amount of fuel received.

6.5.7.2. Annunciator Alarm. The solid-state alarm annunciator panel is on the end of the PCP. It contains small windows (about 25 millimeters by 38 millimeters [1 inch by 1.5 inches]) arranged in rows and columns with alarm points engraved on them. Typical examples are LLA, HLA, HHLA, pump failure, and microprocessor system faults. In addition to the windows illuminating and flashing, there are two different audible alarm horns to alert personnel to the emergency. One is a vibrating horn and the other is a resonating horn. Should an alarm condition occur, the visual indicator flashes and the horn sounds. This condition must be acknowledged by pressing the acknowledge button. This causes the alarm to stop and the flashing indicator to show a steady light. The indicator will stay lit until the alarm condition is rectified. Should another alarm occur, the process would be the same.

6.5.7.2.1. Vibrating Horn Alarms. The following conditions will cause the vibrating horn to sound (system fault alarm is initiated upon detection of system fault):

6.5.7.2.1.1. Pump #1 failure.

6.5.7.2.1.2. Pump #2 failure.

6.5.7.2.1.3. Pump #3 failure.

6.5.7.2.1.4. Pump #4 failure.

6.5.7.2.1.5. System 1 fault.

6.5.7.2.1.6. System 2 fault.

6.5.7.2.1.7. Product recovery tank OV closed.

6.5.7.2.1.8. Product recovery tank leak.

6.5.7.2.1.9. High-level, product recovery tank.

6.5.7.2.1.10. High-level, oil/water separator.

6.5.7.2.1.11. High-level, operating tank #1.

6.5.7.2.1.12. High-level, operating tank #2.

6.5.7.2.1.13. High DP, receiving F/S.

6.5.7.2.1.14. Engine generator fault.

6.5.7.2.2. Resonating Horn Alarms. The following conditions will cause the resonating horn to sound:

6.5.7.2.2.1. Emergency stop.

6.5.7.2.2.2. Low-level, operating tank #1 (if the outlet valve is not fully closed).

6.5.7.2.2.3. Low-level, operating tank #2 (if the outlet valve is not fully closed).

6.5.7.2.2.4. High-high-level, operating tank #1.

6.5.7.2.2.5. High-high-level, operating tank #2.

6.5.7.3. Pressure/Flow Recorders. Mounted on the PCP is a three-channel, continuous-plotting, two-speed strip recorder. It uses three pens of different colors to record system activity. One pen records system pressure (0 to 300 psi), another is for issue flow rates (0 to 9085 liters per minute [0 to 2400 gallons per minute]), and the last one records return flow rates (0 to 3028 liters per minute [0 to 800 gallons per minute]). The strip moves at either 25 millimeters (1 inch) per hour

for routine operation or 203 millimeters (8 inches) per hour if more detailed information is required for system troubleshooting.

6.5.7.4. Operator Controls. Controls are mounted on the PCP door panel. There is a three-position selector switch that allows either Automatic, Off, or Flush mode operation. A second selector switch allows selection of the lead pump; it has as many choices as there are pumps. Selecting the lead pump also selects the sequence of pump operation. Selecting #1 as the lead pump means Nos. 2, 3, and 4 will follow in sequence. By selecting #2 as the lead pump, Nos. 3, 4, and 1 follow in sequence. Other controls include the Emergency Stop Button, and the Test, Reset, and Acknowledge buttons of the annunciator panel.

6.5.7.5. Microprocessors. The microprocessor is the brain that actually turns things on and off. By reading pressure, flow, and status, and relating these signals to the installed program, it translates signals into action. There are two microprocessors in the PCP. They receive power from separate but identical power conditioners and battery systems. They operate redundantly and cycle off and on without interruption. Only one microprocessor actively controls the system at a time, but the backup is continuously updated with system data. Should the active microprocessor fail, the system automatically shifts to the backup without affecting system operation. Control can also be shifted manually with a lockout key system. The operating program is stored in a battery-backed memory, and is fully capable of cold starts without operator (POL personnel) intervention. Program cold-start values are permanently installed in the memory, but are adjustable. By using two thumbwheel switches, two push-buttons, and a twenty-character alphanumeric display, small changes can be made. Various types of microprocessors are installed in the field. Refer to the manufacturer's manual for specific details.

## 6.6. Sequence of Operations.

6.6.1. System in Automatic Mode. The Type III system is intended to stay continuously pressurized at 75 psi while in the automatic idle mode, or between 100 and 130 psi during refueling operations.

6.6.1.1. Idle Condition. The system is in the idle condition when the system is in automatic mode and no system pumps are running. Periodically, while in automatic mode/idle condition, the system pressure may drop below 60 psi even though no aircraft refueling is being conducted. When PIT 1 or PIT 2 (depending on microprocessor selection) senses that system pressure is below 60 psi, the control system will cause the following:

6.6.1.1.1. The lead fueling pump will start.

6.6.1.1.2. The BPCV 58AF-9 solenoid will energize to enable (E/E) the valve to modulate open at its set point (typically between 100 and 130 psi at the furthest hydrant outlet).

6.6.1.1.3. The PCV 58AF-3 solenoid will energize to close (E/C) the valve any time a pump is running.

6.6.1.1.4. The D/FV 58AF-9-1 solenoid A (defueling) will de-energize to close (D/C) the valve, and solenoid B (flush) will D/C any time the system is not in the flush mode.

6.6.1.1.5. The lead fueling pump immediately establishes a flow of 2271 liters per minute (600 gallons per minute) that is sensed by the issue venturi DPT.

6.6.1.1.6. When no fuel is being delivered to an aircraft, the fuel will flow back to the immediate operating storage tank through the return venturi. With one pump running, when the

return venturi DPT senses a flow of 2120 liters per minute (560 gallons per minute) or greater for more than 60 consecutive seconds, the microprocessor initiates shutdown.

6.6.1.1.7. During shutdown, the solenoid on the BPCV will D/C the valve and cause the hydrant loop pressure to rise.

6.6.1.1.8. When the loop pressure reaches 175 psi, three things happen:

6.6.1.1.8.1. The microprocessor calls off the lead pump.

6.6.1.1.8.2. Solenoid A on the D/FV will E/E the valve to bleed system pressure to 80 psi.

6.6.1.1.8.3. PCV solenoid will D/E the valve to bleed the pressure to 75 psi.

6.6.1.1.9. Now the system is back to the automatic mode/idle condition.

6.6.1.2. Refueling Condition. To begin an aircraft refueling operation, the operator must use fueling equipment such as an HSV or R-12, hydrant hose truck (HHT), hose cart, or a pantograph to connect the HCV and API adapter to the aircraft. The control valve can be either hydraulically (fuel) or pneumatically (air) operated, depending on the type of fueling equipment and deadman system. When the operator squeezes the deadman, the HCV begins to open. As system pressure at PIT 1 or PIT 2 (depending on microprocessor selection) drops below 60 psi, the control system will cause the following:

6.6.1.2.1. The lead fueling pump will start.

6.6.1.2.2. The BPCV 58AF-9 solenoid will E/E the valve to modulate open at its set point (typically between 100 and 130 psi at the furthest hydrant outlet).

6.6.1.2.3. The PCV 58AF-3 solenoid will E/C the valve any time a pump is running

6.6.1.2.4. The D/FV 58AF-9-1 solenoid A (defueling) will D/C the valve, and solenoid B (flush) will D/C any time the system is not in the flush mode.

6.6.1.2.5. The lead fueling pump immediately establishes a flow of 2271 liters per minute (600 gallons per minute) that is sensed by the issue venturi DPT.

6.6.1.2.6. If the issue venturi DPT senses 2271 liters per minute (600 gallons per minute) (lead pump running), and the return venturi DPT senses a flow between 151 and 2120 liters per minute (40 and 560 gallons per minute), the lead pump continues to operate and no other pumps will start.

6.6.1.2.7. If refueling continues and an additional aircraft begins fueling, the flow through the return venturi could drop below 151 liters per minute (40 gallons per minute).

6.6.1.2.8. With only the lead pump running (2271 liters per minute [600 gallons per minute]), if the return venturi DPT senses less than 151 liters per minute (40 gallons per minute) for 10 consecutive seconds, a second pump will be energized.

6.6.1.2.9. With two pumps running (4542 liters per minute [1200 gallons per minute]), if the return venturi DPT senses less than 151 liters per minute (40 gallons per minute) for 10 consecutive seconds, the microprocessor will call on the third pump.

6.6.1.2.10. With three pumps running (6813 liters per minute [1800 gallons per minute]), if the return venturi DPT senses less than 151 liters per minute (40 gallons per minute) for 10 consecutive seconds, the microprocessor will call on the fourth pump.

6.6.1.2.11. With two, three, or four pumps running, if the return venturi DPT senses between 151 and 2649 liters per minute (40 and 700 gallons per minute), the activated pumps will continue to run without calling on an additional pump.

6.6.1.2.12. With the lead, second, third, and fourth pumps running, if the return venturi DPT senses over 2649 liters per minute (700 gallons per minute) for 15 consecutive seconds, the microprocessor will call off pumps two, three, and four in the reverse order after each 15-second interval.

6.6.1.2.13. With only the lead pump running (2271 liters per minute [600 gallons per minute]), if the return venturi DPT senses over 2120 liters per minute (560 gallons per minute) for 60 consecutive seconds, the system will initiate shutdown.

6.6.1.2.14. During shutdown, the solenoid on the BPCV will D/C the valve and cause the hydrant loop pressure to rise.

6.6.1.2.15. When the loop pressure reaches 175 psi, three things happen:

6.6.1.2.15.1. The microprocessor calls off the lead pump.

6.6.1.2.15.2. Solenoid A on the D/FV will E/E the valve to bleed the system pressure to 80 psi.

6.6.1.2.15.3. PCV solenoid will D/E the valve to bleed the pressure to 75 psi.

6.6.1.2.16. Now the system is back to the automatic mode/idle condition.

6.6.1.3. Defueling Condition. To begin an aircraft defueling operation, an operator connects the HSV between the aircraft and HCV API adapter. The HSV has an on-board defuel pump capable of pumping 1135 liters per minute (300 gallons per minute) at 165 psi. When the operator starts the defuel pump, the following sequence will occur:

6.6.1.3.1. If pumps are running (PCV and D/FV are E/C), the fuel being removed from the aircraft will either go to any other aircraft connected to the system or the fuel will modulate the BPCV open between 100 and 130 psi to return fuel to the operating tank.

6.6.1.3.2. If pumps are not running (PCV and D/FV are D/E), the fuel being removed from the aircraft will modulate open both the PCV at 75 psi and the D/FV at 80 psi to allow fuel to flow to the operating tank.

6.6.1.3.3. If no refueling operations are planned, the system can be placed in flush mode to expedite defueling. ***NOTE:*** Ensure refueling pumps are not started when the system is placed in flush mode.

6.6.2. Flush Mode. Although fuel entering the hydrant system is filtered at least twice, contaminants and water can still enter the hydrant loop. Some contaminants drop out in the system and tend to accumulate in low points. To keep a pipeline clean, fuel must flow at a minimum velocity of 1.8 meters (6 feet) per second. Calculations show that a 0.3-meter (12-inch) line flowing at 2271 liters per minute (600 gallons per minute) will have a velocity of about 0.5 meter (1.7 feet) per second. At 9084 liters per minute (2400 gallons per minute), the velocity of 2 meters (6.7 feet) per second is just over the minimum velocity of 1.8 meters (6 feet) per second. To completely flush the system, at least twice the loop capacity must be pumped through the loop at maximum velocity. For example, if the Type III loop can hold 75,708 liters (20,000 gallons) of fuel, 151,416 liters (40,000 gallons) must be pumped through the system. If the largest part of the loop is a 0.3-meter diameter pipe, and the flow rate is 9084 liters per minute (2400 gallons per minute), the system would be

flushed for seventeen minutes for a total of 154,444 liters (40,800 gallons), which is double the capacity of the loop.

6.6.2.1. Flush Procedures:

6.6.2.1.1. Place manual valves in the required position to direct fuel flow through the desired flow path, i.e., through the receiving separator or through the separator manual bypass valve.

6.6.2.1.2. Place the PCP mode selector switch in flush mode and the following will occur:

6.6.2.1.2.1. BPCV solenoid will D/C the main valve.

6.6.2.1.2.2. D/FV solenoid B will E/O the valve when flow is established.

6.6.2.1.3. Manually turn on the desired pumps by placing **both** the MCC and pumphouse Hand-Off Auto pump selector switches to the "Hand" position. When the pumps are started, the PCV will E/C the valve.

6.6.2.1.4. Flush until the required amount of fuel is moved through the system at a rate of at least 1.8 meters (6 feet) per second.

6.6.2.1.5. When complete, manually turn off all pumps.

6.6.2.1.6. Return all manually operated valves to their typically open or closed position.

6.6.2.1.7. Return all pump selector switches back to the "Auto" position.

6.6.2.1.8. Place the mode selector switch in automatic mode from the flush mode.

6.6.2.1.9. Observe system operation to ensure the system returns to the pressurized idle condition (75 psi).

6.6.3. Emergency Operation (Microprocessor Down).

6.6.3.1. If both microprocessors are down, the system can be started for emergency fueling using the following procedures:

6.6.3.1.1. Place the fuel pump selector in the "Off" position.

6.6.3.1.2. Ensure the selected operating tank inlet and outlet valves are open.

6.6.3.1.3. Close the manual valve on the inlet of the PCV.

6.6.3.1.4. Manually energize (bypass) the BPCV solenoid to enable the valve to modulate at the set point.

6.6.3.1.5. Manually start the fueling pumps as required by placing the MCC and pumphouse pump selector switch in the "Hand" position. Operator must read the mechanical DPTs located at the return venturi. If the DPTs show less than 151 liters per minute (40 gallons per minute) returning to the operating tank, manually start an additional fueling pump. If the DPTs show more than 2649 liters per minute (700 gallons per minute), manually stop a fueling pump. Manually stop the last fueling pump after the emergency operation is complete.

6.6.3.1.6. Open the manual valve before the PCV.

6.6.3.1.7. Manually de-energize the BPCV solenoid.

6.6.3.1.8. Return the fuel pump selector switches to the original position.

6.6.3.2. During the fueling operation, the operator must continuously verify the operating tank fuel level to ensure the tank does not drop below the tank low level. Verify by checking the liquid level gauge at the tank.

6.6.4. Night Shutdown. At some locations, it is common practice to shut down the system at night. This may cause the system pressure to drop into the vacuum range, especially during hot weather where warm fuel cools in underground piping. Air can get into the system through hydrant pit valves and the HSV check-out stand valves. This can be prevented by leaving the system on or by using airtight covers on the valves.

**6.7. Leak Detection.** A rapid method of checking for leaks in the hydrant system is to leave the system in the automatic idle mode and count the number of times it must be re-pressurized in a given period of time. Experience will tell how many times is too many. Such a problem could indicate an internal leak through a system automatic or manual valve, pressure relief, air eliminator, or drain line, or an external leak through the system piping or components.

# Chapter 7

# FUEL STORAGE TANKS

**7.1. General Information.** The majority of the aboveground storage tanks used for Air Force petroleum products are built according to API Std 650, *Welded Steel Tanks for Oil Storage*, API Std 653, and Air Force standard designs. See Figure 7.1.

**Figure 7.1. Air Force Standard Tank.**

New belowground horizontal cylindrical storage tanks must be constructed in accordance with UL 58, *Steel Underground Tanks for Flammable and Combustible Liquids*, and conform to environmental requirements of 40 CFR 280, *Technical Standards and Corrective Action Requirements for Owners and Operators of Underground Storage Tanks (UST)*, current edition, and typically should be double-walled Type II tanks. Current criteria for aboveground and belowground bulk storage tanks storing aviation fuels require installing a product recovery tank to remove water from tanks. The product recovery tanks should also be programmed for installation on existing facilities without water draw-off systems (Figures 7.2 and 7.3). Motorized pumps are used on new systems, and where an electrical power source is readily available and the additional cost can be justified; hand-operated pumps must be used on all other installations. Product recovery systems are not required on ground product bulk storage tanks (e.g., diesel, heating fuels); however, it may be desirable to have such a system installed on bulk MOGAS storage tanks. This system should only be installed on aboveground bulk MOGAS storage tanks with a capacity of 2000 barrels or larger. Operating instructions are in T.O. 37-1-1.

**Figure 7.2. Water Draw-Off System.**

**Figure 7.3. Water Draw-Off System Detail.**

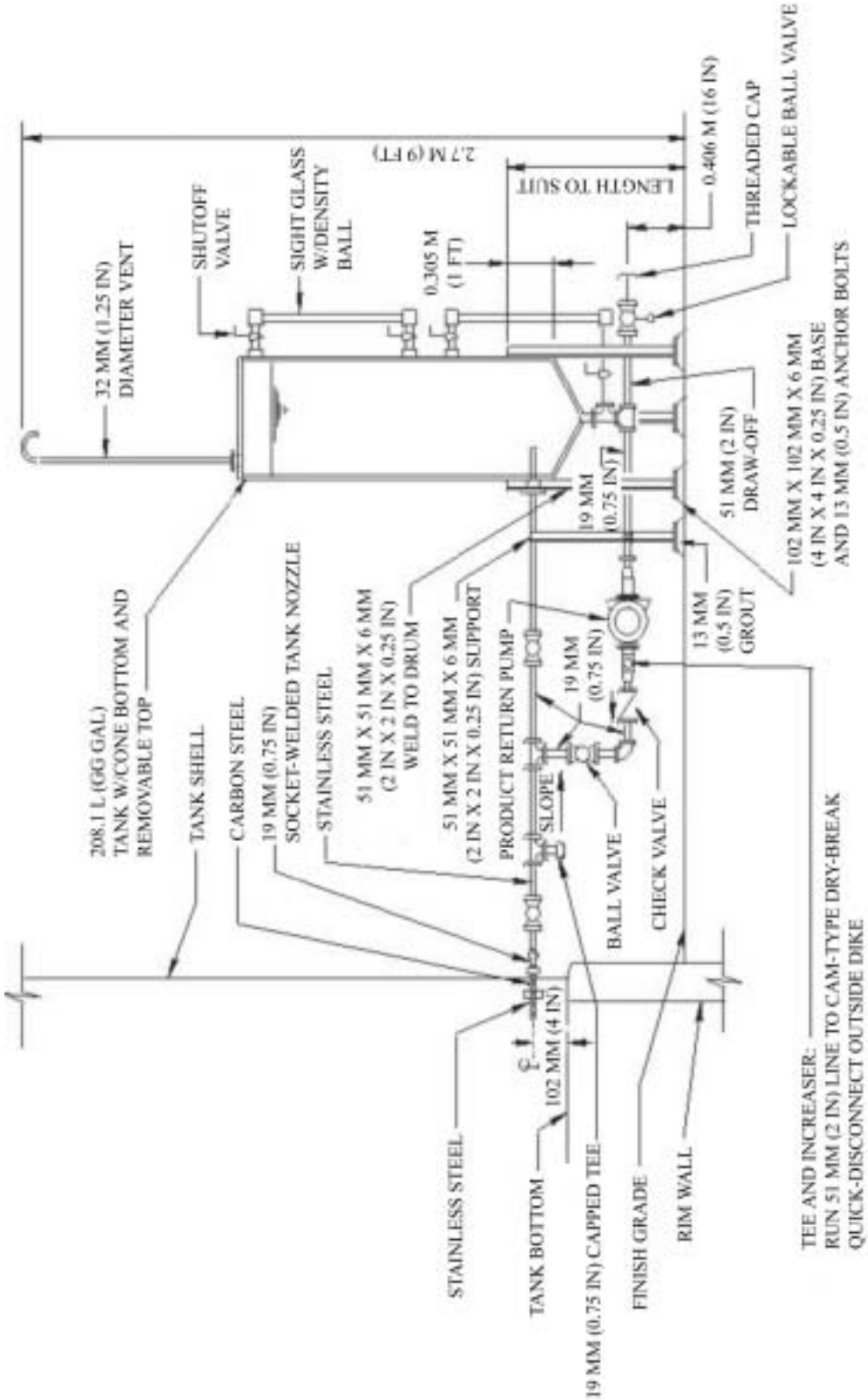

**7.2. Types of Tanks.**

7.2.1. Aboveground.

7.2.1.1. Floating Roof. These types of tanks are in general use for storage of light-weight volatile liquids and jet fuels. The tank is designed to decrease vapor space over the stored liquid. The problem of rainfall or melting snow accumulating on the top roof deck of the open-top floating-roof tank is improved by sloping the roof to a center sump. The sump is connected to a hose or multi-jointed pipe extending through the fuel to an outside water draw-off valve. Because this valve must be closed and locked when unattended, water contamination remains a problem where rainfall is heavy over short periods. Most floating-roof tanks have aluminum fixed roofs installed over the open top where excessive water contamination of fuel is a possibility. For maintenance requirements and responsibilities see paragraph 10.6.2. For all new construction, construct a cone roof tank with internal aluminum honeycomb floating pan (see MIL-HDBK-1022A).

7.2.1.2. Roof Seal. The efficiency of an open-top floating roof in preventing evaporation losses, entrance of precipitation, and reducing the possibility of rim fires, depends largely on the effectiveness of the seal closing the space between the rim of the roof and the tank shell. If the seal does not prevent the escape of vapors around the sealing ring, evaporation will occur. The sealing ring must fit the tank shell snugly. The type of seal generally used with the open-top floating-roof tank has a continuous steel ring with vertical flexures about 0.55 meter (22 inches) apart (Figure 7.4). A continuous, gastight, weatherproof, synthetic-rubber-coated fabric closes the space between the sealing ring and the rim of the roof. The sealing ring is supported and held firmly but gently against the tank shell by pantograph hangers. Because these hangers apply a uniform, outward radial pressure at each flexure in the sealing ring, they tend to keep the roof property centered in the tank. In freezing weather, the seal must be kept free of ice. Moderate use of calcium chloride crystals is permitted at the discretion of the BCE. The sealing ring must move freely on the tank shell during filling as well as during removal of fuel from the tank. Open-top floating-roof seals are also of the type shown in Figure 7.5. Seals for the cone roof tanks that have been converted with the floating pan "floater" usually have the type of rim seal shown in Figure 7.6. Cone roof tanks built to the new standard are equipped with honeycomb aluminum pans and dual pan-to-tank seals as shown in Figure 7.7.

**Figure 7.4. Floating Pan.**

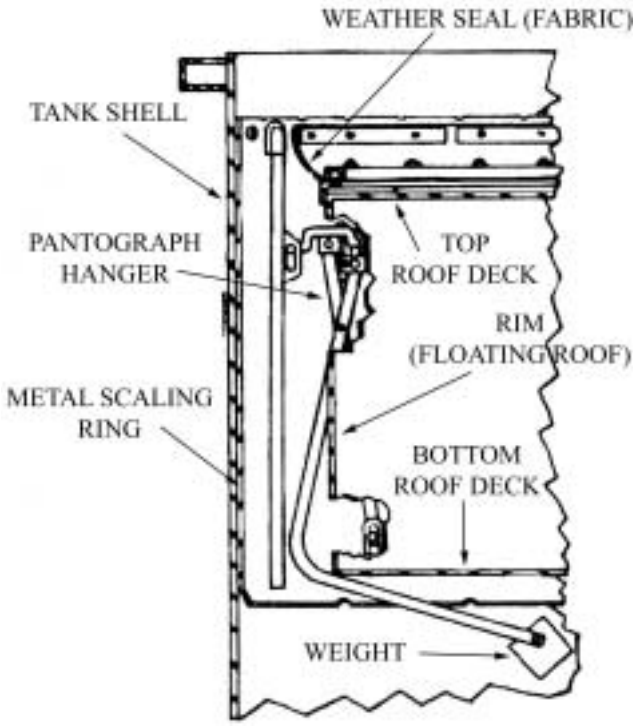


**Figure 7.5. Floating Pan Detail.**

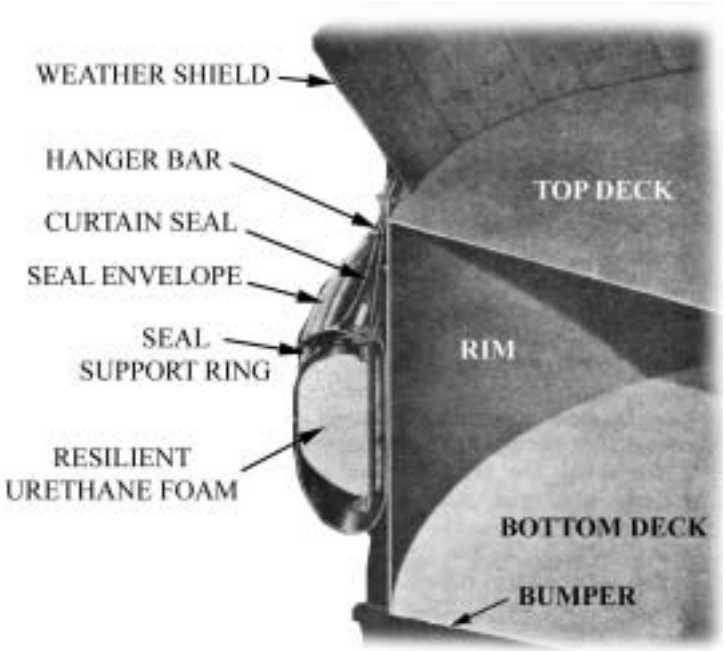

**Figure 7.6. Floating Pan Seal.**

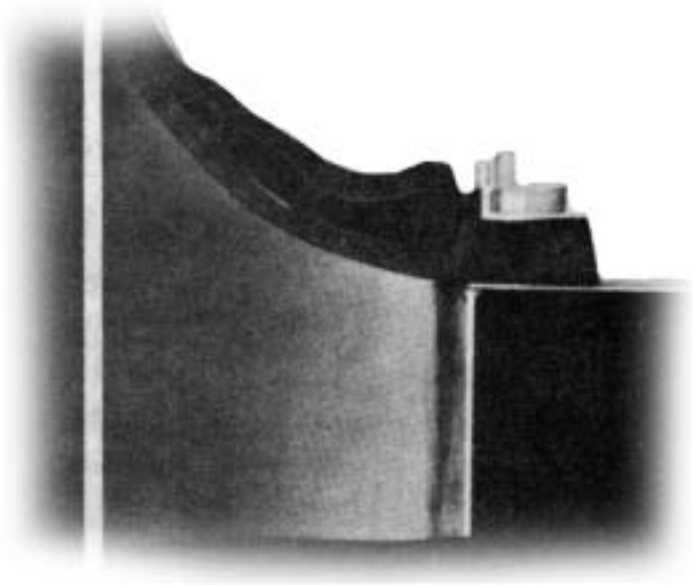

**Figure 7.7. New Standard Tank Seal.**

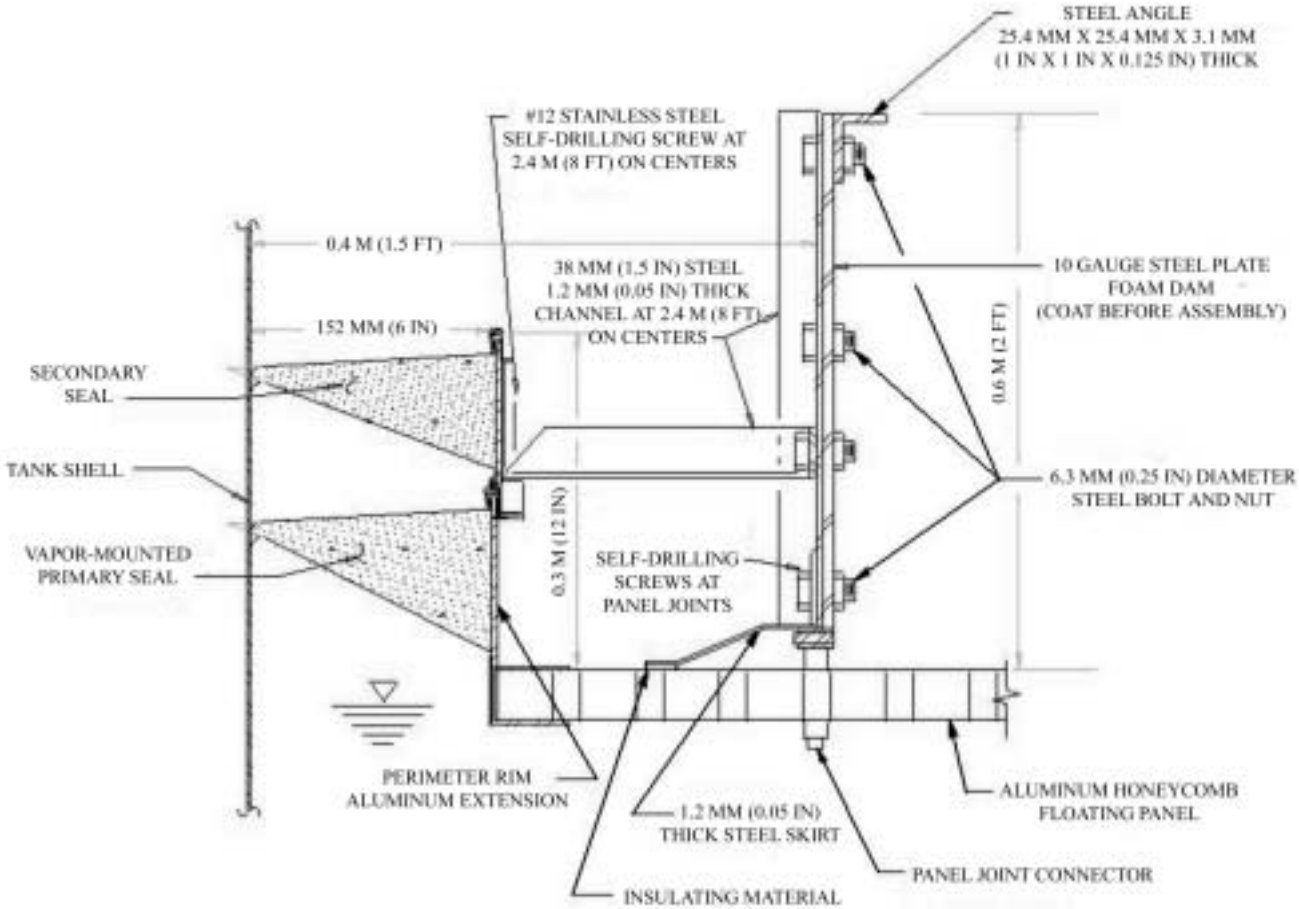

7.2.1.3. Automatic Float Gauge. Figures 7.8 and 7.9 show the type of gauge used on an open-top floating-roof tank. The gauge is actuated by a float in a well in the deck. The float is connected to the gauge tape by a stainless steel cable. By connecting the float to the cable with a turnbuckle, it is possible to make quick adjustments for over-reading or under-reading (lengthen the cable for under-reading; shorten the cable for over-reading). The tape is counterweighted and both tape and counterweight are enclosed in a weatherproof housing. The tape is read through a window. The gauge head (Figure 7.9) uses a spring-actuated storage sheave to take up the tape instead of counterweights; the tape is passed over a sprocket sheave that registers the liquid level in the tank on counter wheels for a more accurate reading. On tanks with floating pans, the tape is attached directly to the honeycomb pan (Figure 7.10). ***NOTE:*** This design will not read fuel level below the setting of the pan legs, and is not a substitute for automatic tank gauging.

**Figure 7.8. Automatic Float Gauge.**

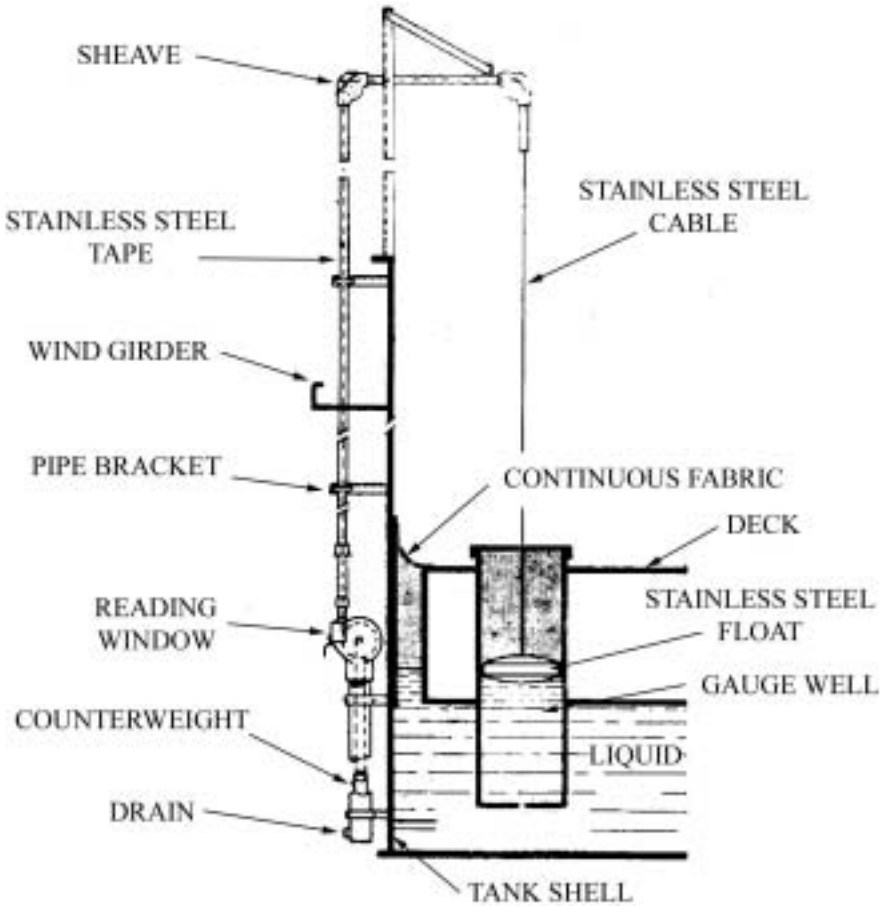

**Figure 7.9. Automatic Float Gauge Head.**

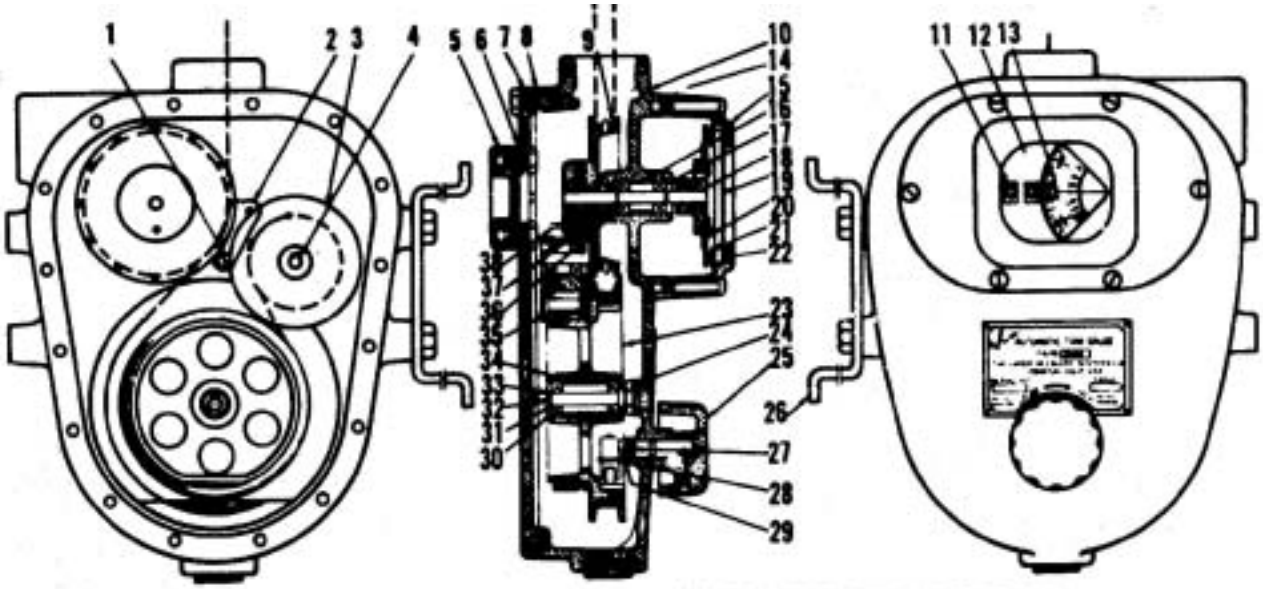


1. MACHINE SCREW
2. GUIDE, TAPE
3. MOTOR STORAGE SHEAVE
4. SHAFT, MOTOR STORAGE SHEAVE
5. CAP
6. GASKET, CAP
7. BACK COVER
8. GASKET, BACK COVER
9. SPROCKET SHEAVE ASSEMBLY
10. CASE
11. COUNTER ASSEMBLY
12. MASK
13. PINION
14. GASKET, COUNTER COVER
15. COVER, COUNTER
16. SPACER, COUNTER DRIVE SHAFT
17. BALL BEARING
18. SHAFT, COUNTER DRIVE
19. GLASS, COUNTER
20. DIAL PLATE ASSEMBLY
21. CLIP, GLASS MOUNTING
22. GASKET, GLASS
23. SHEAVE, TAPE STORAGE
24. SUPPORT, DRIVE SHAFT
25. KNOB, TAPE TESTER
26. BRACKET, MOUNTING
27. SPRING, GAGE CHECK
28. GAGE CHECK SUBASSEMBLY
29. PIN, STOP
30. RING, LOCKING
31. WASHER
32. SHAFT, TAPE STORAGE SHEAVE
33. RING, LOCKING
34. SPACER, TAPE STORAGE SHEAVE
35. SPRING MOTOR ASSEMBLY
36. SPACER, SEAL
37. SEAL
38. PIN

**Figure 7.10. Automatic Float Gauge – Floating Pan.**

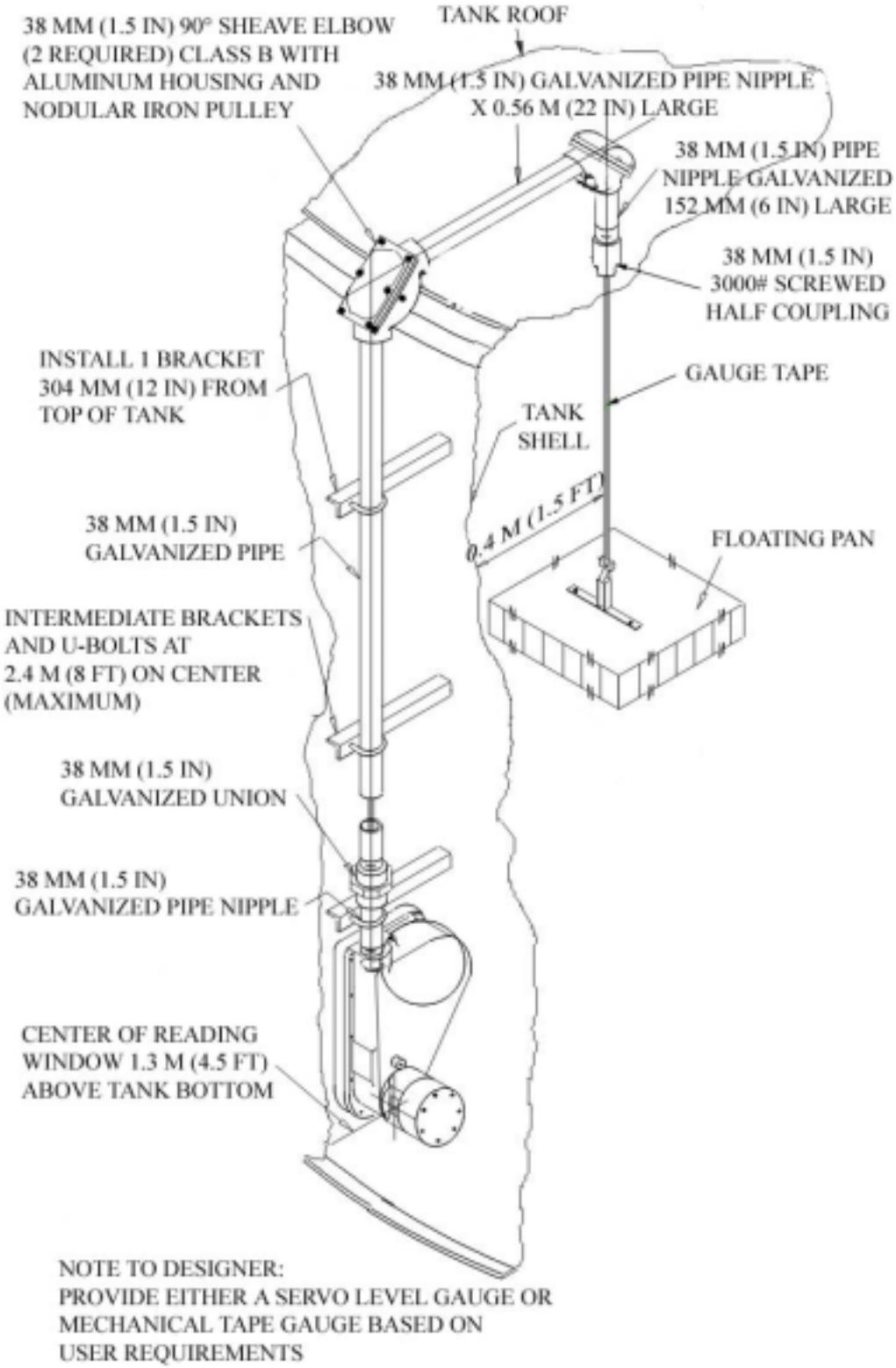

7.2.1.4. Cone Roof Tank with Floating Aluminum Honeycomb Pan. This tank is designed for aboveground storage and reduces the effects of weather. The aluminum honeycomb pan lays directly on the fuel surface, eliminating any trapped vapor above the fuel surface. Two rim seals prevent vapors from escaping into the atmosphere. This is the tank required by Air Force standard designs.

7.2.1.5. Horizontal Cylindrical. New design criteria limits the tank size to a maximum of 151,416 liters (40,000 gallons). It is equipped with direct-reading gauges and provides for manual gauging to determine the tank's fuel level. Follow NFPA 30, NFPA 30A, and UL 142, *Steel Aboveground Tanks for Flammable and Combustible Liquids*. Figure 7.11 shows a horizontal cylindrical tank.

**Figure 7.11. Horizontal Cylindrical Tank.**

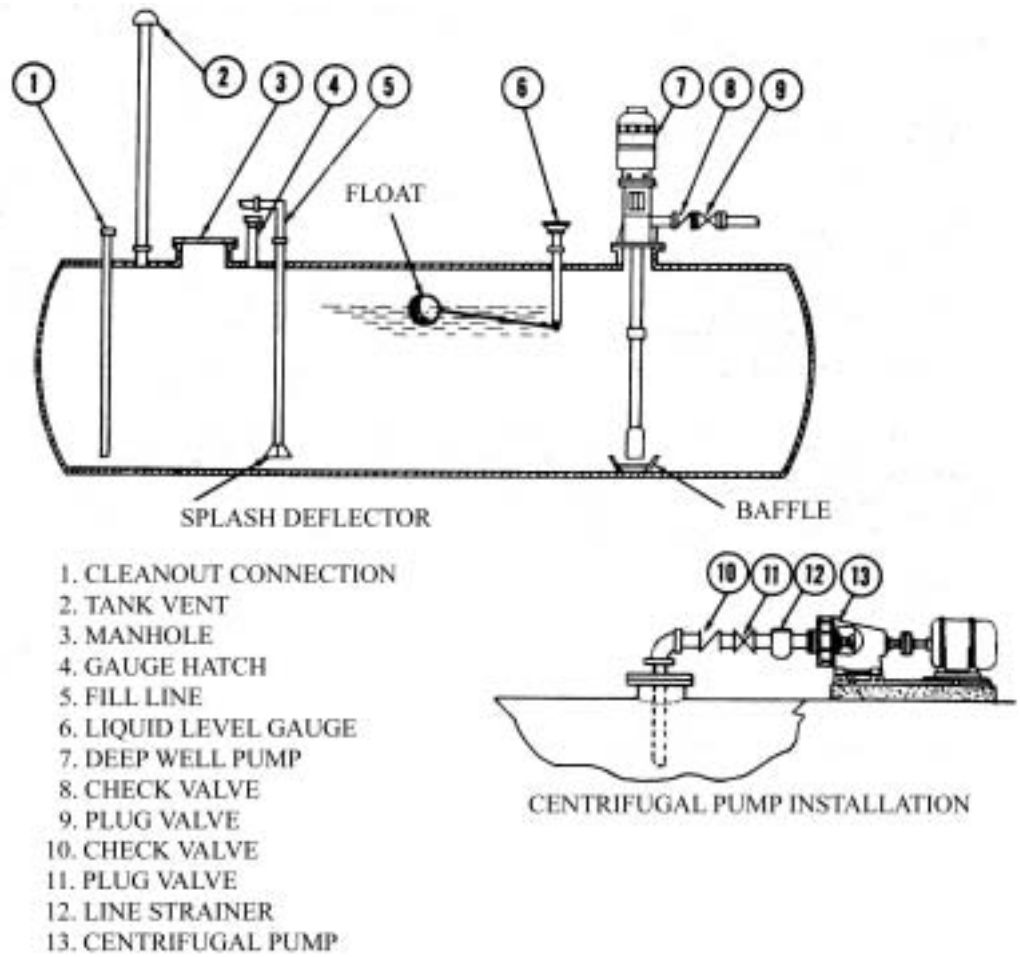


7.2.1.6. Self-Diking or Vaulted Tanks. Removing underground storage tanks is creating a new market in aboveground tanks that do not need dikes, can be located next to buildings, and are more attractive than standard tanks. These tanks range in size from 946 to 45,424 liters (250 to 12,000 gallons). Tanks used in an application requiring secondary containment must be UL-listed secondary containment tanks, with steel liner and steel outer tanks that can provide interstitial containment that is pressure-testable and -verifiable. If the application requires a fire-rated tank, the two-hour fire rating must exceed all NFPA 30 and NFPA 30A requirements for fire-resistant

tanks. They must also meet the requirements of Uniform Fire Code (UFC) Article 52, *Fuel Dispensing Stations*, and UFC Article 79, *Flammable and Combustible Liquids*, and will provide a minimum two-hour fire rating (see UFC Appendix Standard A-II-F, and UL 2085, *Standard for Protected Aboveground Tanks for Flammable and Combustible Liquids*). Tanks holding jet fuel must have a stainless steel inner tank. See MIL-HDBK-1022A for additional requirements. ***NOTE:*** Many popular manufacturers (even some that are GSA-listed) do not meet the above requirements; verify performance before purchasing.

7.2.1.7. Rectangular. Where building separation is not an issue and where dikes can be constructed, a rectangular-type tank may be acceptable. Follow NFPA 30, NFPA 30A, NFPA 31, *Standard for the Installation of Oil Burning Equipment*, and UL 142. Where secondary containment is not required, such as small heating tanks, an exposed aggregate concrete-encased tank may be desirable. Such tanks are low profile, attractive, and provide a low level of secondary containment.

7.2.2. Belowground. Tanks must be constructed to meet requirements of NFPA 30, NFPA 30A, and NFPA 31. Additionally, follow 40 CFR 280 and state environmental laws.

7.2.2.1. Horizontal Cylindrical. New tanks should be factory-constructed Type II double-walled tanks complying with UL 58 criteria. Slope the tank 1% toward the water drain. See MIL-HDBK-1022A for requirements for new tanks.

7.2.2.2. Underground Vertical (Cut-and-Cover). These tanks are primarily used for oversea locations. The design typically conforms with United States Air Forces in Europe (USAFE)/NATO standard. This type of tank is not typically constructed in CONUS.

## 7.3. Maintenance of Storage Tanks.

7.3.1. Aboveground. All aboveground storage tanks are carefully selected and maintained to prevent fuel evaporation. General maintenance requirements are determined by the tank components.

7.3.1.1. Tank Surfaces. Only touch-up painting is done by LFM personnel. Painting the entire tank is usually done under contract. The outside of petroleum fuel storage tanks is painted to comply with applicable portions of Navy Guide Specification, Section 09971, *Coating of Steel Structures for Atmospheric Service (Navy & Air Force).* The interior is painted to applicable portions of Navy Guide Specification, Section 09973, *Lining of Welded Steel Petroleum Fuel Tanks (Air Force).* The projected life of the interior coating system is over 30 years. Do not recoat the interior of tanks unless the coating has failed. Because of weathering and aesthetics, the exterior of a tank needs to be repainted more frequently than the interior. Apply and or maintain non-slip coatings or tape on the roof, walkways, and ladder rungs, where surfaces become slippery when wet.

7.3.1.2. Interior surface maintenance, including inspection for sludge deposits and corrosion, is on a scheduled recurrent basis according to requirements of paragraph 10.6, with cleaning and repair as required.

7.3.1.2.1. Cleaning of interior surfaces will follow the procedures in Chapter 12, if cleaned by contract. For in-house-type cleaning, the procedures given in Chapter 11 will apply.

7.3.1.2.2. Carefully inspect the underside of the tank roof for signs of weakness and corrosion due to oxygen in the vapor.

7.3.1.2.3. Perform touch-up painting as required.

7.3.1.3. Seals on aboveground open-top floating-roof tanks are subject to deterioration by atmospheric conditions. The following maintenance services are recommended and are performed at intervals as outlined in paragraph 10.6.2:

7.3.1.3.1. Brush the fabric clamps and bolts with a nonferrous wire brush to remove rust and scale.

7.3.1.3.2. Replace deteriorated or defective bolts; tighten loose bolts and clamps.

7.3.1.3.3. Thoroughly clean fabric surfaces with cleansing solvent.

7.3.1.3.4. Apply one or more coats of a white elastomeric coating, compatible with neoprene, to the fabric, clamps, and bolts.

7.3.2. Belowground Tank Maintenance.

7.3.2.1. Inspection is limited to those portions of tank and lines that are exposed inside manhole vaults and pits. Inspect these exposed surfaces periodically for corrosion and chips; repaint if necessary.

7.3.2.2. Interior surface maintenance (including inspection for sludge deposits and corrosion) must be on a scheduled recurring basis according to requirements in paragraph 10.6. In cleaning interior surfaces, follow the procedure given in Chapter 11.

7.3.2.3. Operating storage tanks with below-grade access ways must have one manhole enlarged to 0.91 meter (36 inches) in diameter and extended at least 203 millimeters above grade. Include ladder rungs at the access way that extend to the floor.

7.3.2.4. For quality control reasons, the requirement for the slotted-gauge pipe in operating storage tanks has been deleted from Air Force standard designs. The portion of the gauge pipe inside the tank must be removed at the tank shell as soon as possible. Newer tanks may have a slotted stainless steel stilling well for gauging and sampling wells.

7.3.2.5. Perform touch-up painting as required. Use applicable portions of Navy Guide Specification, Section 09973. Surface preparation is the key to a good job.

## 7.4. Pressure Vacuum Vents.

7.4.1. Description and Use. Pressure vacuum vents (Figure 7.12) are required on all tanks (except open-top floating-roof or floating-pan tanks) with a capacity of 7570 liters (2000 gallons) or more that store products with a flash point below 37 °C (98 °F). Check local environmental requirements, since this requirement may be extended to fuels with higher flashpoints or may require vapor recovery/processing. These vents maintain working pressure in the tank within the safety limits of pressure and vacuum, prevent normal breathing, and reduce loss of fuel by evaporation. When pressure vacuum vents are used, flame arresters are not permitted. Where already installed with pressure vacuum vents, flame arresters should be removed except at USAFE bases where it is a NATO and host nation mandatory requirement that flame arresters be used in vent lines. These flame arresters must be of the "nonfreeze" type. Figure 7.13 shows a simple belowground tank vent.

**Figure 7.12. Pressure Vacuum Vent.**

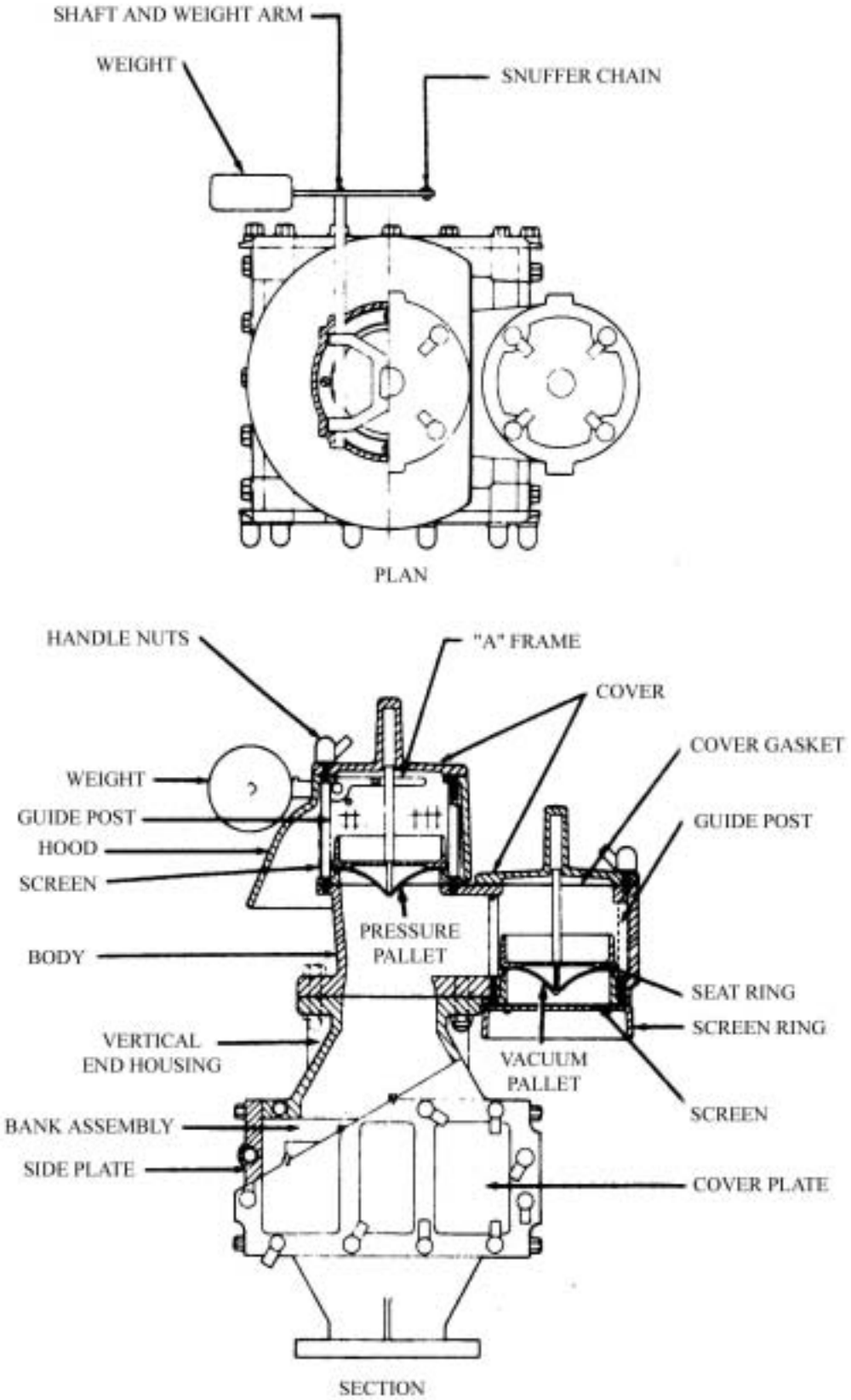

**Figure 7.13. Belowground Tank Vent.**

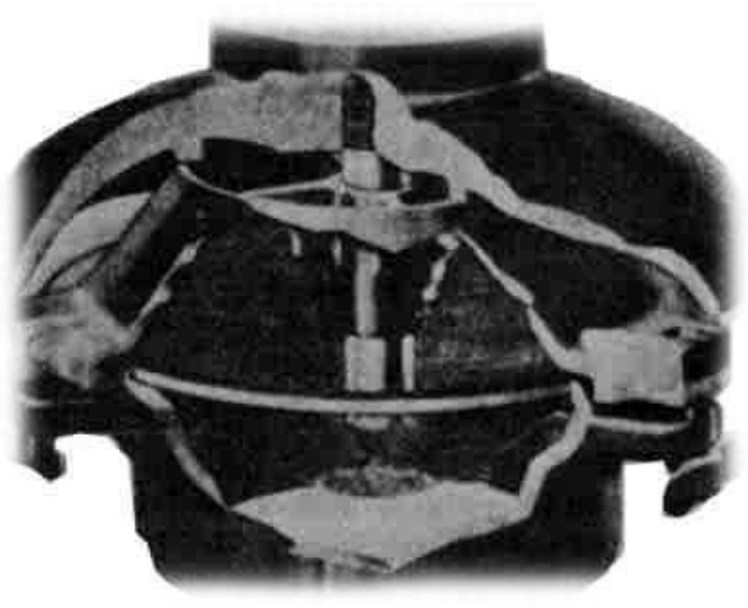

7.4.2. Maintenance. Pressure vacuum vents must be kept in perfect working order to prevent sticking and subjecting the tank to collapsing or bursting conditions.

7.4.2.1. In freezing weather, operations personnel are required by T.O. 37-1-1 to check tank vacuum and pressure vents for freedom of movement of intake and outlet poppet valves.

7.4.2.2. Pressure vacuum vent pallets should be maintained at intervals as prescribed in paragraph 10.7.

7.4.2.2.1. Clean seating surfaces of pallets and valve seats carefully with a suitable cleaning solvent.

7.4.2.2.2. Inspect seating surfaces for damage or undue wear.

7.4.2.2.3. When replacing pallets, make sure they move freely in the guides and that seating surfaces contact evenly and tightly.

7.4.2.2.4. Inspect and clean the protective screen at pressure and vacuum ports. Remove bird and wasp nests.

7.4.2.3. On valves with metal-to-metal seating, it may be necessary, because of corrosion, to regrind the seating surfaces of pallets and valve seats to maintain tightness. Using an extra-fine grinding compound, and a light, even, oscillating motion, grind each pallet onto its respective valve seat.

7.4.2.4. On valves with nonmetallic pallet seat inserts, it may be necessary to replace the inserts. Carefully clean the groove and install the new insert, making sure it fits properly.

## 7.5. Diking.

7.5.1. General Information. Each aboveground petroleum tank having a capacity of 2502 liters (661 gallons) or more must be either surrounded by a dike, enclosed in a containment structure, or designed to direct spills to an impoundment area. Most Air Force tanks are surrounded by a dike.

Follow NFPA 30 for capacity of diked enclosures, except where NFPA refers to the volumetric capacity of the tank or tanks. Instead, add the volume for a five-year, one-hour-duration storm, or one-foot freeboard, whichever is greater. The standard Air Force dike for large vertical tanks is constructed of earth with at least 76 millimeters (3 inches) of reinforced concrete paving on the top and slopes (see MIL-HDBK-1022A). Proper joint placement with a fuel-resistant joint sealer is a critical design and construction element. The dike floor is typically crushed stone with a concrete work ring surrounding the tank ring wall. If a concrete floor is desired it must be justified on an economic basis. Usually a liner is placed beneath the dike, but a spray-on coating is also acceptable where a concrete floor is also installed. Individual tanks larger than 10,000 barrels should be enclosed in individual dikes. Several small tanks (less than 10,000 barrels each) may be enclosed in one dike, up to a total capacity of 15,000 barrels. Where two or more tanks are in one dike, subdivide it using 0.45-meter-tall (18-inch-tall) intermediate dikes. Slope the dike to carry drainage to the dike drain. A swing line or locked drain valve will be used depending on weather requirements. A swing line that may be raised or lowered in the interior of the diked area will be used in cold-weather areas. A drain with a locking gate valve will be used where freezing conditions do not present a problem. This valve must stay in the closed and locked position until the dike is drained. The valve is staffed during drainage operations to prevent possible discharge of fuel pollutants into sanitary systems or bodies of water. Water from the dike will be discharged as required by governing environmental regulations. All piping within the dike must be fire-resistant, such as steel or stainless steel. Avoid aluminum within the diked area.

7.5.2. Alternate Diking Construction. Earth dikes and basins around fuel storage tanks require continuous maintenance to prevent erosion and eliminate vegetation. Some installations have applied a nonselective soil sterilizer to the top and inside surfaces of the dike to eliminate vegetation. The surfaces are treated with at least 76 millimeters of crushed rock or pit run gravel. To hold the rock in place, Geotextiles or sprayed-on asphalt can be used. Inspect the earth dikes according to requirements outlined in paragraph 10.8.1.

# Chapter 8

## SAFETY AND ENVIRONMENT

**8.1. General Safety**. Safe O&M of fuel facilities is compulsory to preserve life and property. Breaches of safety standards may result in disciplinary action. Comply with the following measures:

8.1.1. Static and Electrical Grounding. Bonding and grounding components of petroleum fuel facilities are of primary importance in preventing fire and explosion. All components in the fuel system must be bonded and grounded to drain off static charges and stray electrical currents that can discharge in the form of an electric arc. Bonding across flanges is not required as long as the bolts and gasket between flanges are not electrically insulated. Static charges and prescribed grounding procedures are detailed in Chapter 9.

8.1.2. Tools and Equipment. Common repairs and maintenance may be made with standard tools; however, the area should be free of volatile liquids and vapors. Emergency repairs in the presence of volatile liquids and vapors should be made cautiously to prevent sharp blows that could cause sparks.

8.1.3. Hose. Operators should clean and inspect off-loading and loading hoses after each use. Properly store them in racks protected from the sun's rays. Inspect and test hoses according to paragraph 10.5.

8.1.4. Signs. Inspect each fuel facility for permanent signs and markings, following guidance in paragraph 10.16. Ensure signs are conspicuously mounted, clearly legible, and show the desired objective. Verify enough movable or temporary signs are maintained in good condition to serve all possible uses; for example: "DANGER," "CLOSED TO TRAFFIC," “KEEP FLAMES AWAY," "MEN WORKING," "DO NOT OPEN THIS VALVE UNDER ANY CONDITION," "NO SMOKING," "TURN ON FAN BEFORE ENTERING PIT,” “PUMP HOUSE," "DANGER NO OPEN FLAME OR IGNITION SOURCE BEYOND THIS POINT.” Use bilingual signs when appropriate. Signs must meet AFOSH standards and T.O. 37-1-1 requirements.

8.1.5. Markings. Tanks must have the NATO fuel designation stenciled on each tank, along with the US designation (e.g., JP-8 F-34; JP-5 F44). Provide identification banding or coding on tanks and piping according to MIL-STD-161, *Identification Methods for Bulk Petroleum*, and maintain and inspect according to paragraph 10.16.

8.1.6. Vapor- and Explosion-Proof Equipment. The NEC requires special electrical components in areas where explosive vapors may be present or where volatile fuels are handled. NFPA 407, *Standard for Aircraft Fuel Servicing*, Paragraph 2-4.9, requires electrical equipment and wiring to be designed for Class I (flammable) liquids for all applications. Each repair project for a fuel facility must be inspected to verify these requirements have been met.

8.1.7. Housekeeping. Safe, efficient operation requires cleanliness, neatness, and order. Each individual must correct hazardous situations, if possible, or report them.

8.1.8. Expansion. Fuels expand about 0.12% for each degree Celsius (0.07% for each degree Fahrenheit) temperature increase (about five times greater than water). In a closed, tight pipeline system completely full of fuel with no provision for pressure relief, the internal pressure will increase about 75 psi for each degree Fahrenheit temperature increase; therefore, it is absolutely essential that all closed systems have a pressure relief bypass system (pressure relief valve and or check valve). Relieved fuel must be directed to a vented tank.

**8.2. Safety Precautions and Hazards of Liquid Petroleum Products.** Although handling petroleum products presents many hazards, both bulk and packaged products can be handled safely if product characteristics are understood and proper precautionary measures are taken. Maintenance personnel should know the hazards in handling and storing aviation fuels come from both the fuel (toxic through skin contact or ingestion) and its vapors. Vapors from all petroleum products constitute fire and explosion hazards and are also toxic to the human body. Vapors from petroleum products have caused fires or explosions because the vapors are heavier than air and settle in low places such as tanks or pits. The vapors will remain in these low places indefinitely unless removed by ventilation. A detailed description of product characteristics is in MIL-HDBK-201B(1), *Petroleum Operations*, October 1, 1992, MIL-HDBK-1022A, and AFOSH Std 91-38, *Hydrocarbon Fuels, General*.

8.2.1. Toxic Liquids, Vapors, and Dust.

8.2.1.1. Liquids. Most petroleum products are toxic because of their aromatic content or additives (especially tetraethyl lead). Avoid getting jet fuel or gasoline on the skin and clothing. Because JP-8 has fewer aromatics than JP-4, it does not evaporate quickly. This means skin contact is more likely to result from fuel on clothing. Jet fuel and gasoline remove protective oils from the skin, causing drying, chapping, and cracking that can lead to infection and possible blood poisoning. Severe chemical burns may result if jet fuel and gasoline remain in contact with the skin. Shower and remove contaminated clothing at once and avoid any source of ignition. Remove jet fuel or gasoline from the skin by washing with soap and water as soon as possible after contact. Remove fuel that comes in contact with the eye immediately with the eye bath or any other available means of flushing the eye with water, and secure medical attention as soon as possible. Accidentally swallowed petroleum products may cause central nervous system depression and pneumonia. Do not induce vomiting and do not allow the victim to smoke! Victims should be taken to a medical facility at once. Be sure to inform medical authorities of the type of fuel and approximate amount ingested. Liquid contact with the skin may also affect the liver, kidneys, or bone marrow, due to additives or contaminants such as benzene. Use disposable fuel-resistant coveralls to reduce fuel absorption. Replace coveralls contaminated with fuel.

8.2.1.2. Vapors. Vapors accumulate inside enclosed areas (such as tanks and pump houses) and settle in low areas (such as pits and valleys). Promptly report all physical reactions resulting from jet fuel or gasoline vapor inhalation to a physician, even though rest and fresh air may cause recovery within a few hours. To eliminate personnel hazards of vapor concentrations, follow AFOSH Std 91-25, *Confined Spaces*.

8.2.1.3. Dust. Eliminate most toxic dust by properly disposing of sludge and cleaning waste.

8.2.2. Personal Clothing. The hazards of working with JP-8 have added a new concern in selecting personal clothing. Although static electric buildup must still be considered, absorbing fuel components through the skin is important as well. The conventional 50% polyester and 50% cotton-blend coveralls used by LFM for years do not provide adequate protection from fuel absorption. JP-8 in contact with the fabric tends to wick from a small contact area to a much larger area, increasing the contaminated area in contact with the skin and causing skin irritation. Although the 50/50 blend is adequate for routine work, the coveralls should be changed if contaminated with fuel. When working in a fuel-intensive environment, such as tank cleaning, use a disposable Tyvek® coverall having a static-dissipating coating. This may be worn alone or over the cotton-blend coveralls. In tests, no protective product totally prevented JP-8 from passing through. The exposure area was low because the wicking effect was not present. Because of this, replace Tyvek® coveralls that become

contaminated. Fuel tank cleaning crews using Tyvek® coveralls as the only garment have not experienced the skin problems encountered using the 50/50 blend. ***NOTE:*** The static-dissipating coating on Tyvek® coveralls is water-soluble. Loss of the coating should not be a problem during low lower explosive limit (LEL) conditions. Use properly coated coveralls during the initial opening of a tank when explosive vapor levels may be present outside of the tank (paragraph 8.4.2). When wearing Tyvek® coveralls, take the same precautions as with the 50/50 blend, and ground yourself periodically to remove static charges.

8.2.2.1. Studies have identified the greatest static charges were created during the replacement or removal of outer garments such as field jackets and parkas. To end this hazard potential, personnel must not put on or remove such garments while engaged in fuels handling or servicing operations.

8.2.2.2. Civilian or military clothing of all wool, silk, or nylon materials, or blends of silk or nylon, generate far greater electrostatic charges and constitute an unacceptable hazard potential; therefore, clothing made of these materials must not be worn as outer garments during fuels servicing or handling operations. Wool stockings, wool glove inserts, woolen navy stocking caps (where authorized), and underwear of nylon, silk, or polyester poses no significant hazard and are acceptable.

8.2.2.3. Foul weather gear is allowed in Table of Allowances (TA) 016, *Table of Allowances for Special Purpose Clothing and Personal Equipment*, for LFM personnel who are subject to outside work during inclement weather. Any type of clothing may be worn as outer garments when working with high-flashpoint fuels (JP-5, JP-8, JP-10, Jet A, Jet A-1, or diesel). However, when servicing aircraft with low-flashpoint fuels (JP-4, Jet B, AVGAS, MOGAS), clothing containing more than 65% of any combination or mixture of nylon, rayon, wool, or polyester must not be worn (T.O. 00-25-172, *Ground Servicing of Aircraft and Static Grounding/Bonding*, paragraph 4-16d).

## 8.3. First Aid.

8.3.1. Inhaling Vapors. The concentration of gasoline, jet fuel, or fuel oil vapors that can be inhaled safely is far below that required to reproduce combustible or explosive mixtures with air. Even one-tenth of the concentration needed for combustion or explosion is harmful if inhaled for too long. Remove persons showing signs of dizziness, nausea, or headache from the hazardous area. Recovery from early symptoms is usually prompt after exposure to fresh air. If a person is overcome, administer first aid at once and get prompt medical attention. If breathing has stopped, administer cardiopulmonary resuscitation (CPR). When working with JP-5/8 in a confined space, be aware that vapors can be harmful even with an LEL of 0 unless the space has been completely freed of vapor.

8.3.2. Swallowing. Petroleum products are exceedingly irritating when swallowed. Do not induce vomiting except as directed by a physician, as uncontrolled vomiting may cause more petroleum products to go down the windpipe and produce severe and rapidly progressing pneumonia. If choking or vomiting occurs, the subject should be placed on his or her stomach with the head turned to the side and airways cleared to ensure drainage by gravity and to decrease the chance of aspiration. If victim is unconscious and not breathing, administer CPR.

8.3.3. Eye Wash Facilities. Fixed eyewash facilities are required in shops, pumphouses, and other similar facilities (AFOSH Std 91-32, *Emergency Shower and Eyewash Units*). Portable units are available to provide initial cleansing until a fixed unit can be reached. Consult your bio-environmental engineer (BEE) for advice on the best unit for the application.

**8.4. Preventing Petroleum Fires.**

8.4.1. General. The absence of any one of the conditions listed in paragraph 8.4.1, as represented by the missing leg of the fire triangle, prevents a fire. It is not practical to eliminate air completely or to control air-vapor proportions where gasoline is handled and dispensed. Temperatures cannot be controlled to the point where vapors are not possible; therefore, to eliminate all sources of ignition, it is essential to prevent fires. ***NOTE:*** Liquid oxygen coming in contact with fuel reacts violently to produce spontaneous combustion. It is mandatory that these materials be kept isolated from each other. Three simultaneous conditions are necessary to create petroleum fires:

8.4.1.1. Petroleum must be in the form of vapor.

8.4.1.2. Air-vapor mixture must be present in the correct proportion to support combustion or explosion.

8.4.1.3. The combustible mixture of air and petroleum vapor must be raised to its ignition temperature or subjected to a source of ignition.

8.4.2. Sources of Fire and Explosion.

8.4.2.1. Vapors above the explosive limit are not combustible if the tank is not opened; however, after the tank has been opened vapors escaping to the atmosphere are quickly diluted to within the explosive limit, and, if ignited, will cause fire at manholes and other tank outlets. Eventually the vapor concentration in the tank is diluted, creating a fire and explosion hazard within the tank.

8.4.2.2. Extra precautions must be taken when venting a tank to be sure all sources of ignition are eliminated. Petroleum vapors are heavier than air and will travel several hundred feet before they dissipate into the atmosphere. Any source of ignition may ignite these vapors and cause a flashback, resulting in fatalities of personnel caught in the flashback and loss of the property issuing such vapors.

8.4.2.3. Sludge and other saturated material (e.g., sediment, hollow roof supports, sidewall scale, oil-soaked wooden structures) continuously release petroleum vapors. These vapors can accumulate to above the explosive limit in an enclosed area. A tank should not be declared safe until all such materials have been removed.

8.4.2.4. Primary contributors to vapor ignition are static or stray electrical currents and personal negligence. The human factor can be reduced by education and taking strict disciplinary action against safety regulation violators.

8.4.3. Preventive Measures. Preventing petroleum fires can best be done by reducing or controlling the open presence of petroleum products and vapors, and by eliminating sources of ignition, as follows:

8.4.3.1. Provide proper ventilation for pumphouses, pits, and other enclosed spaces where petroleum vapors may accumulate.

8.4.3.2. Take all precautions to prevent petroleum product leaks or spills.

# Chapter 9

## ELECTRICAL GROUNDING AND BONDING

**9.1. General Information.** This chapter provides general information related to the two hazardous conditions that must be considered in handling and dispensing petroleum products: static electricity and stray electrical current. See NFPA 77, *Recommended Practice on Static Electricity*, for additional guidance on static electricity hazards.

**9.2. Static Charge Generation in Refueling Systems.** Low-conductivity liquids, such as jet fuel, become electrostatically charged while flowing through fuel systems. This can produce enough electrical energy to cause ignition, fire, or explosion of the fuel-air mixtures above the liquid fuel surface.

9.2.1. The mechanism of electrostatic charge generation is very complex, with many variables that can increase or decrease the amount of electrical energy in fuel itself.

9.2.2. Certain equipment and conditions in fuel systems produce high static charges, necessitating designs to retard this hazard. F/Ss are prolific static generators because of the filter media and must be grounded directly to a grounding rod.

9.2.3. Fuel systems are grounded to earth potential, and each piece of equipment is electrically interconnected by bonding through mechanical connections. Where no continuity exists, jumper wires are installed across insulated sections. Where flange sections are broken, bonding is attained by installing jumper wires. Isolation flanges provided for cathodic protection purposes require special devices to provide continuity. Aboveground piping is tied to ground rods and underground sections are grounded by being in contact with the earth. During refueling, static electricity is generated through piping and especially the F/S. Although some of it is dissipated through contact with piping, a residual charge remains that places the destination tank (usually the aircraft's tank) at a different potential than the system or HSV. It is essential that the tank be bonded to the system to allow the static charge to relax.

9.2.4. Many other factors contribute to electrostatic charge generation in aircraft fuels. More detailed information may be found in technical libraries and T.O. 00-25-172.

9.2.4.1. During filling operations, aircraft refuelers and commercial transports have developed measured electrostatic charges exceeding 50,000 volts. One reason for these high-voltage build-ups is the insulating effect of the rubber tires from ground potential if the vehicle is not properly bonded to the servicing system.

9.2.4.2. The overhead method of filling refuelers and transport trucks has been replaced with bottom-loading methods. Top loading allowed fuel to free-fall, creating a large static charge inside the vehicle's tank in an atmosphere conducive for an explosion. Bottom loading is much safer since there is no free-fall of liquid to create static electricity.

9.2.4.3. Fuel flow through equipment and transfer pipes will generate sufficient static electricity to create a potential hazard. Tests have shown that a typical flow of fuel through an F/S will produce sufficient static electricity to create a spark.

9.2.4.4. The movement of contaminants (e.g., rust, mill-scale water, air) during stable settling in storage tanks ionizes the contaminants to produce a static charge. These charges build up around triggering points (gauging and sampling devices, floats, and swing pipes) and, if not discharged through the fuel to the wall of the grounded tank, sparks can occur in the vapor space above the fuel. Petroleum products are poor conductors of electricity and bleed off static charges slowly; therefore, contaminants ionized during the fuel transfer to the tank hasten the build-up of static charges within the tank and increase the possibility of electrical sparks.

9.2.4.5. Particles of vapor suspended in air can become ionized and create a difference of potential with the liquid fuel. The normal relative humidity of the atmosphere (moisture in the air) provides a path to dissipate the static charge safely; however, in dry areas, particularly at low temperatures, the rate of discharge is slow and a dangerous accumulation of static electricity can build up.

9.2.4.6. Personnel and clothing (wool, rayon, and synthetic materials) accumulate static electricity from normal body movement. These charges can be discharged through clothing, skin, or tools and equipment as they come in contact with components of the fuel system.

9.2.4.7. Aircraft or service equipment may become electrostatically charged due to atmospheric inductive coupling. In this case, the base weather service notifies the maintenance officer of impending hazardous conditions, such as lightning storms within 8 kilometers (5 miles), so that fuel handling operations, maintenance and repair activities, and tank cleaning operations will be temporarily stopped.

**9.3. Preventing Static Electricity.** It is not possible to completely eliminate static electricity. Use the following precautions to reduce the magnitude of charge and therefore the possibility of sparks:

9.3.1. Connect a static bonding wire between two components before making or breaking a connection and before working on flanged connections insulated from one another by nonmetallic insulating materials. When vehicles or aircraft are grounded, attach grounding wires to the vehicle or aircraft before bonding to the grounding rod. This is especially important for operations involving fuel transfers (fueling, defueling, loading, and unloading).

9.3.2. Avoid surface agitation by limiting the initial fill rate into a fuel storage tank to less than 0.91 meter (3 feet) per second. Maintain this flow rate until the floating roof or pan is afloat and the fill pipe is completely submerged, or until the fill pipe is completely submerged in all other tanks. ***NOTE:*** Wait thirty minutes after loading or unloading an aboveground fuel tank before allowing anyone on it.

9.3.3. Personnel will ground themselves to the tank by making firm contact between the tank and back of the bare hand or by holding a coin in the bare hand before opening access covers or inspection holes. Also, ground sampling devices to the tank before opening the sampling well.

**9.4. Relaxation (Release) of Electrostatic Energy.** Fuels are poor conductors. Static dissipater additive (SDA) is added to JP-8 to improve conductivity. JP-5 lacks an additive, so designs rely on time delays to dissipate the charge (i.e., certain refueling equipment has relaxation tanks to delay movement and relax electrostatic charges).

9.4.1. Fuel components, such as hydrocarbons and chemicals, permit a flow of electrons. When there is electrostatically charged fuel in a tank or pipe, the mutual repulsion of like charges in the fuel and their attraction to the opposite charge on the tank or pipe causes a current flow (i.e., positive ions

may be attracted to the F/S while negative ions are attracted to the aircraft tank) The bonding wire provides a return path for the ions to equalize.

9.4.2. Most electrostatic problems can be prevented through design, bonding, and adhering to safety procedures. It is important to remember to initially fill tanks and F/Ss slowly.

**9.5. Grounding or Bonding Procedures.** Although generation of static electricity and stray currents can be reduced, they cannot be completely eliminated. To further reduce the hazard of a possible spark discharge, static charges can be greatly reduced by proper grounding or bonding techniques. The following grounding procedures must be followed with still greater care during the storage and handling of jet fuel because of the increased possibility of ignition by static charge (standard grounding criteria are in AFMAN 32-1065, *Grounding Systems*. ***NOTE:*** Do not use stainless steel ground rods.

9.5.1. Storage Tanks. Figure 9.1 shows a typical grounding method installed on existing aboveground tanks. The current design criteria for new aboveground vertical tanks requires the use of a plastic liner between the sand support of the tank and native soil, so grounding is required. Older tanks, without a liner, where the tank rests on the earth, do not require the use of ground rods. If necessary, a grounding system will be installed using galvanized steel ground rods and 6.3- to 9.5-millimeter (0.25- to 0.375-inch) galvanized guy wires as the grounding conductor. No copper is used in the grounding system. The purpose of this requirement is to eliminate corrosion caused by steel reacting with copper. On existing aboveground tanks where grounding is provided and the tank is in contact with the earth (including oil-treated sand), using copper ground rods or copper grounding conductors, the grounding system should be removed and treated in the same way as prescribed for new installations. Also, original design criteria calls for various methods of bonding floating roofs to tank walls in floating-roof tanks. A typical grounding method for existing aboveground tanks is shown in Figure 9.1; this includes bonding ladders on floating roof tanks as shown in Figure 9.3. When these bonding cables require replacement, use 2.3-millimeter (0.09-inch) stainless steel wire rope, nylon-covered (NSN 4010-00-575-6234).

**Figure 9.1. Aboveground Tank-Grounding Procedures.**

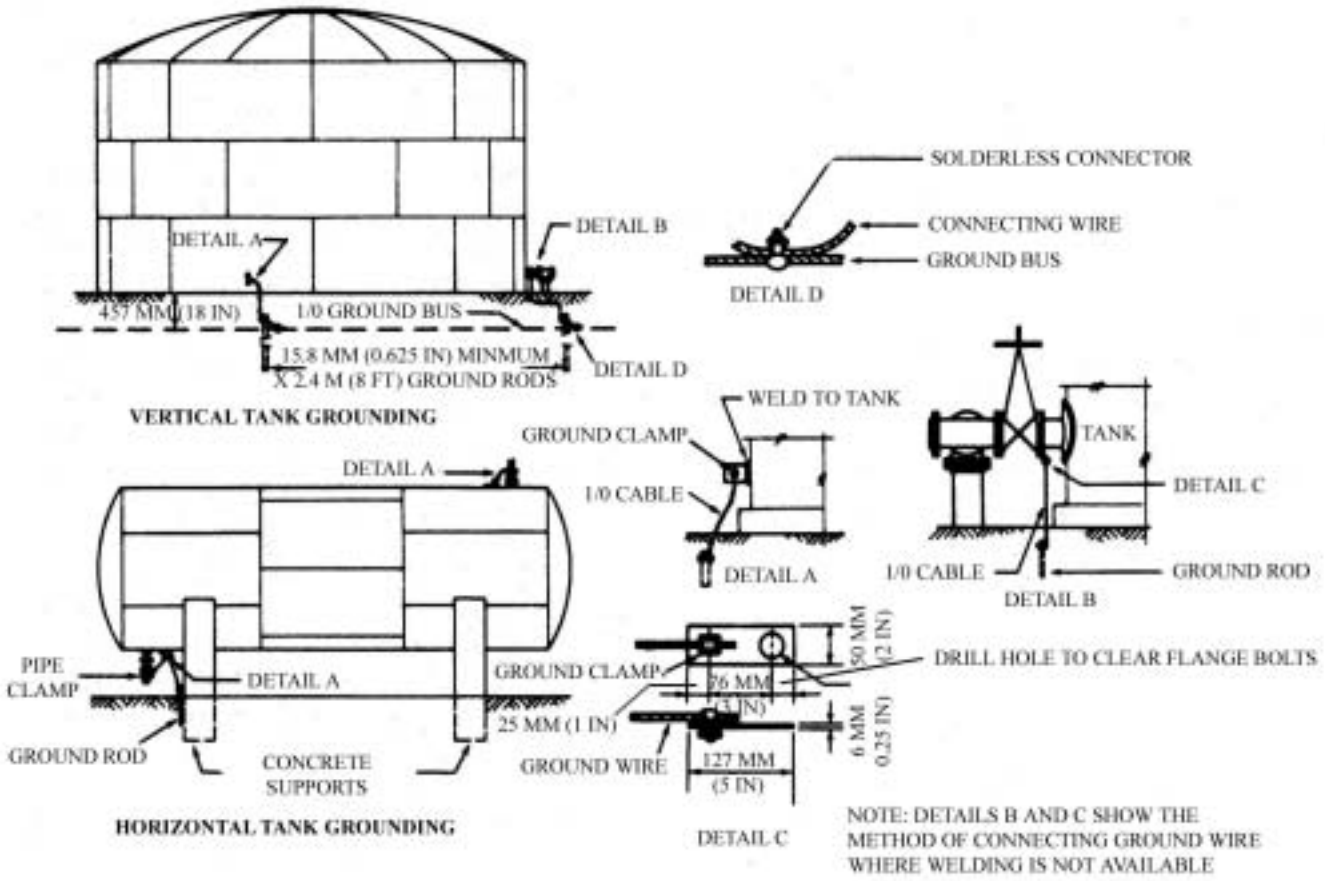

**Figure 9.2. Typical Method of Grounding Pier, Floating, and Barge Facilities.**

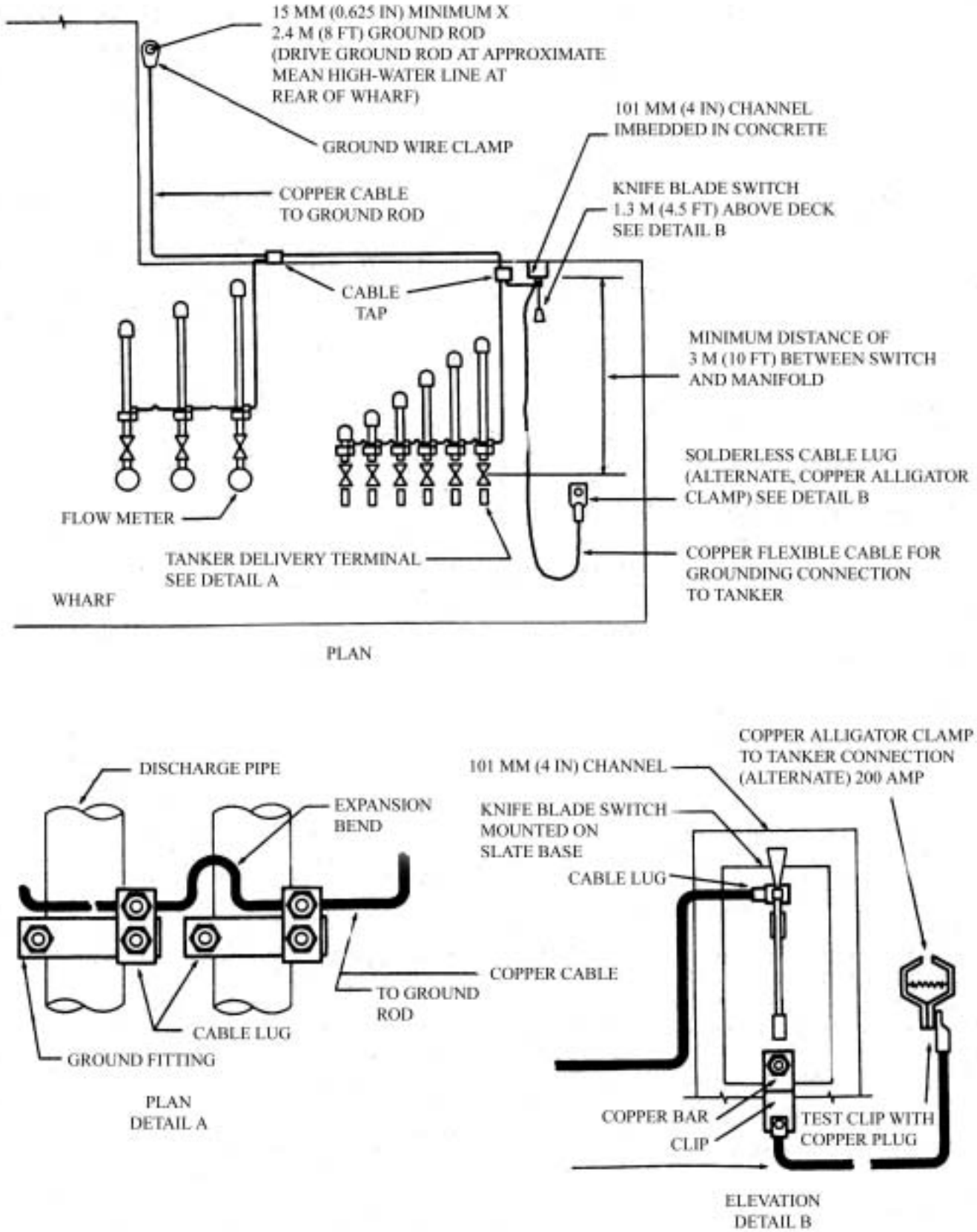

**Figure 9.3. Typical Method of Bonding Ladders on Floating Roof Tanks.**

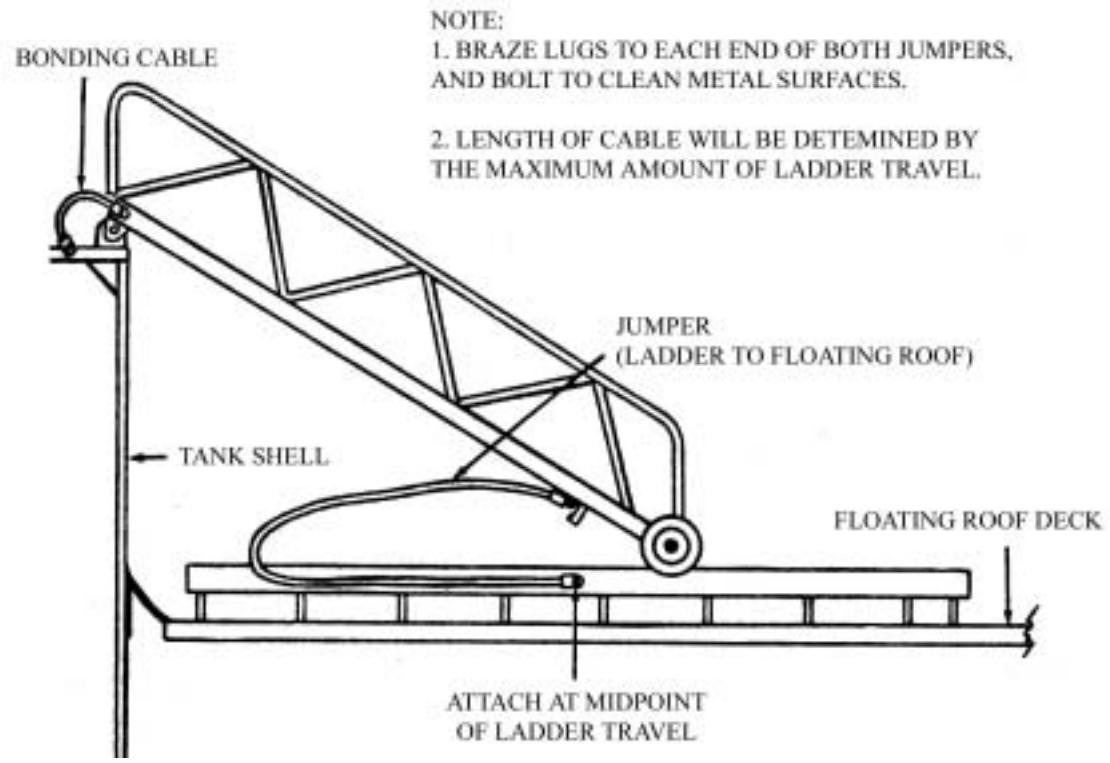


9.5.2. Pier Facilities. Before starting unloading operations from a barge or tanker, and before hose connections are made, securely bolt the ground wire on the dock to a clean, paint-free surface on the discharge line of the ship.

9.5.2.1. After this ground has been established, close the switch on the dock, completing the circuit. Maintain the circuit until offloading has been completed and hoses have been disconnected. See Figure 9.2. for typical grounding and bonding procedures. When the existing number 4 AWG copper (stranded cable) or copper alligator clamps need replacing, use 2.3-millimeter (0.09-inch) corrosion-resistant, plastic-covered steel cables (NSN 4010-00-286-2681 and MS 27610 Clip, Electrical Ground, NSN 5999-00-94-5844, respectively).

9.5.2.2. Periodically check all ground-connection cables, switches, and bonding jumpers for contact condition and tightness, as specified in paragraph 10.23.

9.5.3. Tank Car Loading and Unloading Facilities. When a tank car is being loaded, securely attach the grounding cable to a clean connection on the car before opening any valve or dome cover, or connecting the fuel hose. There is no requirement to connect a grounding cable between the tank car and stand or fuel line header during unloading operations because adequate grounding is provided to the rails without the use of the grounding cable.

9.5.4. Truck Fill Stand and Unloading Facilities. Under some atmospheric conditions, a truck in motion builds up a considerable charge of static electricity. Attach the grounding cable before opening the fill hatch or outlet valve or connecting the fuel hose. Figure 9.4 shows a typical bonding cable system and grounding details. Ground rod B is near the base of the fill stand. As soon as loading or unloading operations are completed and the fuel hose is detached from the vehicle, disconnect the ground conductor. Make periodic inspections to ensure tight bonding and good

ground conditions always exist. Maintain and test the grounding components as outlined in paragraph 10.23 and T.O. 00-25-172. When replacement of the existing number 4 AWG copper-stranded cable becomes necessary, use 2.3-millimeter (0.09-inch) stainless steel wire rope, nylon-covered
(NSN 4010-00-286-2681).

**Figure 9.4. Truck Fill Stand and Unloading Area Grounding.**

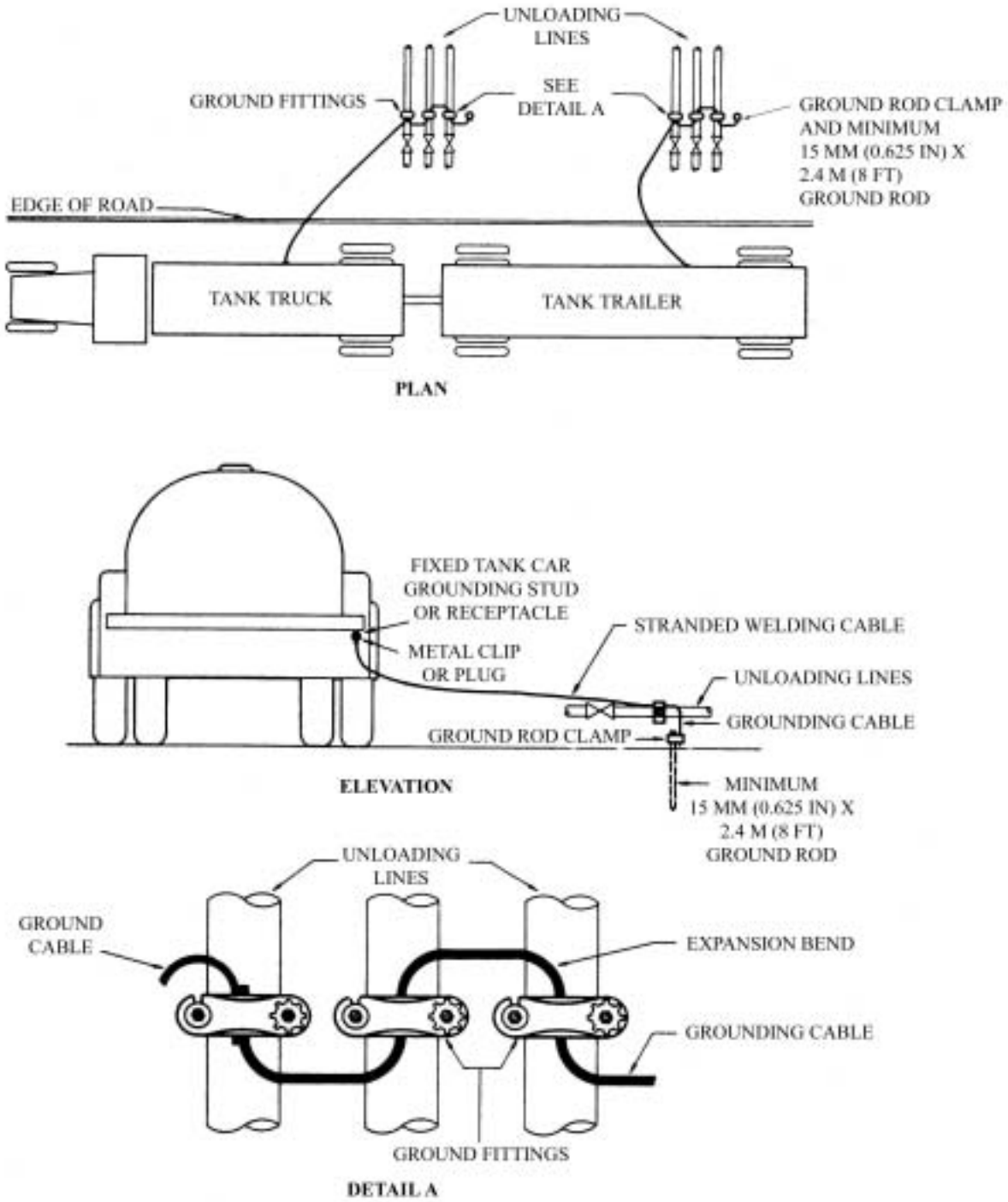

9.5.5. Truck Fill Stand Grounding Assembly.

9.5.5.1. The assembly modification to the truck fill stand is done by the BCE from local resources, along with the FMF. Funding for materials is available from DESC. Visit the DESC home page at http://www.desc.dla.mil/default.asp.

9.5.5.2. The grounding assembly is installed and must be attached to a permanent structure of the fill stand, readily available for the refueler operator, and must be electrically interconnected to an existing approved static ground. The fixture uses the standard grounding hardware already installed on the refueler's reel cables. The design provides extra features that make the receptacles available from either direction of entry, and automatically disconnects if the vehicle is accidentally driven off; it also includes additional receptacles in case of a jack failure.

9.5.5.3. The aluminum T-bar may be attached to any type of surface (painted or bare metal) with standard cadmium-plated nuts and bolts. A number 10 or larger solid copper wire should interconnect with the assembly lug and approved static ground. Galvanic corrosion between two different types of metals will be minimal and have little effect on the assembly.

9.5.6. Hydrant Fueling Systems.

9.5.6.1. Where hydrant systems are grounded, it may be convenient to use a galvanized steel combination ground rod tie-down anchor (at least 16 millimeters [0.625 inch] in diameter by 2.4 meters [8 feet] in length) that is convenient to the aircraft. For Type II systems, it is centered between the hydrant outlet box and the electrical junction box paving. The surface of the paving should be cupped out to provide accessibility.

9.5.6.2. Provide a standard electrical ground clip on one end of the grounding cable. This connecting fitting should provide positive gripping by the clip's teeth only, so that it must be opened to be removed.

9.5.6.3. Some Type II and III systems permanently bond the piping at the hydrant outlet to a driven ground rod (Type II systems also bond to the electric conduit at the electrical junction-receptacle box) with 1/0 copper bonding cable and approved grounding clamps. Usually, cathodic protection is applied to the hydrant system underground piping to retard corrosion. When the hydrant outlet is bonded to a ground rod, the outlet must be electrically isolated from the cathodically protected piping system at the first pair of flanges below the outlet. This is required to prevent shorting of the cathodic protection system, thereby making it ineffective. ***NOTE:*** Where cathodic protection is installed, and the hydrant outlet valve is grounded, it is extremely important to periodically verify the integrity of the isolation flange.

9.5.6.4. Use at least 15.8 millimeters [0.625 inch] in diameter by 2.4 meters [8 feet] in length galvanized steel rods with tie-down rings (or Shepherd's hooks), for static grounds. For bare base and remote locations, use ground rod NSN 5975-00-240-3859.

9.5.6.5. Resistance of an approved static ground may be as high as 10,000 ohms, although a lower resistance is usually experienced.

**9.6. Electrical Currents.** Electrical currents originate in generators, transmission systems, wiring, and electrical devices. They are more dangerous than static charges because of the continuous electrical spark compared with the brief spark of a static charge. Observe the following precautions to eliminate the hazard of electrical currents. Verify that all electrical work on petroleum storage and dispensing systems complies with the NEC for Class I liquids. This is required by NFPA 407 2-4.9, *Standard for*

*Aircraft Fuel Servicing*, which requires all electrical equipment and wiring to comply with NFPA 70, Article 515, *Using Class 1 Liquids Requirements*, for all applications.

## 9.7. Stray Currents.

9.7.1. General Information. Stray currents flow through different paths than the intended circuits, or are any extraneous current in the earth. Sources of stray currents include electric railways, electric power systems, electric welders, cathodic protection systems, and aircraft aeronautics electrical equipment malfunctions. Since Air Force fixed refueling systems are in intimate contact with the earth, stray currents sometimes take paths through the conducting parts of the system.

9.7.2. Hazards Due to Stray Currents. Stray currents cause arcs that will ignite combustible fuel-air mixtures.

9.7.3. Eliminating Hazards Due to Stray Currents. The grounding and bonding method used for reducing static hazards is important in eliminating stray current hazards. This does not eliminate stray currents, but does ensure a continuous path is provided to conduct them into the earth without arcing.

9.7.4. Tank Car Loading and Unloading Facilities. Railroad spurs, used for loading and unloading tank cars, should be insulated from the main line rails, so isolating them from stray currents that may flow in the main line rails.

9.7.5. Marine Terminals. Stray currents from cathodic protection systems at marine terminals require special attention. These systems, used for protecting piping and steel piers, cause currents to flow in the water. The steel hull of the vessel acts as a conductor of these currents. The ship-to-shore fuel-handling hose constitutes a conductor as it contains reinforcing wire, and will complete a low-resistance circuit from the vessel to the shore-side piping. Arcs may then occur between the vessel and the hose when the hose is connected, disconnected, or brought into contact with the vessel's deck. To prevent arcing, a grounding cable is connected between the shore-side piping and the vessel before operations begin. A switch wired in series with the cable is closed after the cable connection is made, and before the fuel handling hose is taken aboard the vessel. Any stray current flows from the vessel to shore by the cable, and arcing is avoided at the fuel handling hose and its connections (Figure 9.2).

9.7.6. Piping. Stray current may flow through piping systems because its electrical resistance is low compared to the surrounding earth. When removing any section of piping, valve, meter, or other component that will interrupt the continuity of the system, first install a bonding jumper wire. This jumper, installed around the component to be removed, will prevent an arc when the component is removed.

## 9.8. Electrical Inspection, Testing, and Identification Procedures.

9.8.1. Approved Static Grounds. Approved static grounds are provided for conducting electrostatic charges and stray electrical currents to earth or ground potential. These electrostatic voltages may be as high as 50,000 volts with low currents, and consequently the static ground resistance may be as high as 10,000 ohms. The purpose of an approved static ground interconnected with aircraft and support equipment is to place all components of the system to equal electrical potential to prevent arcing.

9.8.2. Identifying and Marking Static Grounds. All static grounds referenced in this manual will have a resistance of less than 10,000 ohms. All existing static grounds will have a one-time test with

resistance values permanently recorded. Any static ground with a resistance greater than 10,000 ohms will be removed or replaced. Any static ground mechanically damaged will be repaired and retested. Static grounds do not need to be tested periodically after the initial test.

# Chapter 10

## RECURRING WORK PROGRAM (RWP)

**10.1. General Information**. The safe, efficient, and economical operation of petroleum storage, dispensing systems, and associated infrastructure depends largely on an effective and proactive recurring maintenance program. An installation's ability to accomplish its mission is increasingly dependent on a fully operational POL system. The recurring work program (RWP) is the most effective means of ensuring these critical systems are maintained at elevated in-service rates. The guidance in this chapter provides standardized procedures for servicing and inspecting POL systems and components. This chapter establishes the required frequency intervals for the recurring maintenance program. Deviations from the required frequencies listed in this chapter require prior approval by the applicable MAJCOM Petroleum Facility Engineer. Refer to Air Force Pamphlet (AFPAM) 32-1004, Volume 2, *Working in the Operations Flight - Maintenance Engineering*, Chapter 8, for an explanation of the preventive maintenance methodology used by the CE community.

**10.2. Responsibilities.**

10.2.1. The CE LFM shop, with assistance from the Maintenance Engineering shop, is responsible for developing an effective recurring maintenance program. The LFM shop foreman is responsible for accurately identifying and inventorying all fuel system components requiring recurring maintenance. The LFM shop foreman is responsible for the timely completion of all maintenance actions identified in the RWP program.

10.2.2. Many components throughout the POL system require some level of operator maintenance as identified in T.O. 37-1-1. The LFM shop foreman should be familiar with these operator maintenance requirements and verify the work is performed properly. Operator maintenance actions are not considered as preventative in nature and are not to be used to adjust the RWP program.

10.2.3. Representatives of the LFM shop and the FMF will inspect all petroleum systems weekly. At least one inspection each month will include the LFM shop foreman and the FMF commander (FMF/CC) or designated representative. During the inspection, a status review of all outstanding work will be conducted. The LFM shop foreman will verify that discrepancies are correctly annotated and have a work order number assigned.

10.2.4. The LFM shop foreman is responsible for coordinating with the FMF and other applicable agencies before performing recurring maintenance that may affect mission accomplishment.

**10.3. Recurring Maintenance and Inspections.** The following paragraphs describe recurring maintenance requirements performed by CE personnel. The required maintenance frequencies are shown in bold type at the end of the paragraph or subparagraph. Use Table 10.1 as a quick-reference chart to locate the paragraphs in this manual describing the preventive maintenance for each item.

**Table 10.1. Preventive Maintenance References.**

| Item | Paragraph | Frequency |
|---|---|---|
| **Automatic Control Valves** | | |
| **Type I System** | 10.3.24.1 | |
| HLSO 124AF | 10.3.24.1.1 | Semi-annually |
| Non-surge/Check 81AF | 10.3.24.1.2 | Semi-annually |
| FSCV 40AF-2A | 10.3.24.1.3 | Semi-annually |
| Fuel/Defuel 302AF | 10.3.24.1.4 | Quarterly |
| **Type II System** | 10.3.24.2 | |
| Refuel Control 90AF-8 | 10.3.24.2.1 | Quarterly |
| Defuel Control 134AF | 10.3.24.2.2 | Quarterly |
| Rate-of-Flow 41AF | 10.3.24.2.3 | Quarterly |
| Pressure Relief 50AF-2 | 10.3.24.2.4 | Semi-annually |
| HLSO 129AF | 10.3.24.2.5 | Semi-annually |
| Non-surge/Check 81AF-8 | 10.3.24.2.6 | Semi-annually |
| **Type II System (Modified)** | 10.3.24.3 | |
| Rate-of-Flow 41AF-10 | 10.3.24.3.1 | Quarterly |
| Pressure Relief 51AF-4 | 10.3.24.3.2 | Quarterly |
| **Type III System** | 10.3.24.4 | |
| HLSO 413AF-5A | 10.3.24.4.1 | Semi-annually |
| Rate-of-Flow 41AF-1A | 10.3.24.4.2 | Semi-annually |
| FSCV 41AF-2C | 10.3.24.4.3 | Semi-annually |
| BPCV 58AF-9 | 10.3.24.4.4 | Quarterly |
| D/FV 58AF-9-1 | 10.3.24.4.5 | Quarterly |
| PCV 58AF-3 | 10.3.24.4.6 | Quarterly |
| HCV 362AF-8 | 10.3.24.4.7 | Quarterly |
| ESOV 136AF-9B | 10.3.24.4.8 | Quarterly |
| **Type IV System (Hot Pit)** | 10.3.24.5 | |
| HLSO 129AF-3A | 10.3.24.5.1 | Semi-annually |
| D/FV 58AF-9-1 | 10.3.24.5.2 | Quarterly |
| Pantograph PCV 58E-47 | 10.3.24.5.3 | Quarterly |

| | | |
|---|---|---|
| HCV 362AF-7 | 10.3.24.5.4 | Quarterly |
| ESO 136AF-9B | 10.3.24.5.5 | Quarterly |
| Flush Valve 136AF-5A | 10.27.5.6 | Quarterly |
| **Hoses** | | |
| Offloading | 10.3.2.1 | Prior to initial installation and as determined by the LFM supervisor and local environmental requirements. |
| Issue | 10.3.2.2 | Prior to initial installation and as determined by the LFM supervisor and local environmental requirements. When an API 1529 hose is delivered with a hydrostatic certification from the manufacturer, initial testing is not required. |
| **Manual Valves** | | |
| Lubricated plug | 10.3.8.1 | Quarterly |
| Gate | 10.3.8.2 | Quarterly |
| Non-lubricated plug | 10.3.8.3 | Quarterly |
| Ball | 10.3.8.4 | Quarterly |
| **Meters** | | |
| Master meter | 10.3.12.1 | Annually |
| Meter calibration | 10.3.12.2 | Annually |
| Drain water | 10.3.12.3 | Weekly |
| **Miscellaneous** | | |
| System areas | 10.3.1 | As required |
| Surge suppressors | 10.3.11 | Quarterly |
| Signs and markings | 10.3.13 | Annually |
| Pressure relief | 10.3.14 | Annually |
| Service station dispensers | 10.3.15 | Quarterly |
| Direct-reading gauge | 10.3.16 | Annually |
| DP/PI transmitter | 10.3.17 | Semi-annually |
| Cathodic protection | 10.3.18 | As required |
| PPE | 10.3.19 | Annually or before use |

| | | |
|---|---|---|
| Electrical components | 10.3.20 | Quarterly |
| Hydrant adapters | 10.3.21 | Semi-annually |
| Auto tank gauge | 10.3.22 | Annually |
| Strainer | 10.3.23 | As required |
| **Piping** | | |
| Pressure test | 10.3.6.1 | Annually |
| Hydrostatic test | 10.3.6.2 | Every 5 years |
| Exposed piping | 10.3.6.3 | |
| Corrosion control | 10.3.6.3.1 | Semi-annually |
| Identification | 10.3.6.3.2 | Quarterly |
| **Pumps** | | |
| General maintenance | 10.3.7.1 | Quarterly |
| Lubrication | 10.3.7.2 | Quarterly or per manufacturer |
| Product recovery | 10.3.7.3 | Quarterly |
| **Storage Tanks** | | |
| Vacuum/pressure vent | 10.3.4 | Semi-annually |
| Dikes | 10.3.5 | Annually |
| Aboveground | 10.3.3.1 | |
| Visual inspection | 10.3.3.1.1 | Monthly |
| API 653 | 10.3.3.1.2 | Every 10 years |
| Floating roof/pan | 10.3.3.2 | |
| Seals and pan | 10.3.3.2.1 | Monthly |
| Roof drain | 10.3.3.2.2 | Monthly |
| Roof drain (antifreeze) | 10.3.3.2.4 | As required |
| Cleaning/inspection | 10.3.3.3 | |
| Without F/S and coating | 10.3.3.3.1 | Every 4 years |
| With F/S or coating | 10.3.3.3.2 | Every 6 years |
| With F/S and coating | 10.3.3.3.3 | Every 8 years |

10.3.1. System Areas. Large grass-covered areas around fuel systems will be mowed by BCE personnel or by service contract. Consult the Maintenance Engineering shop for questions concerning performance of this task by contract.
**FREQUENCY: As required.**

10.3.2. Hoses.

10.3.2.1. Offloading Hoses. For truck or tank car offloading areas, use 101-millimeter (4-inch) lightweight, reinforced, vacuum-rated offloading hoses (see MIL-HDBK-1022A). Test per the manufacturer's instructions.
**FREQUENCY: Prior to initial installation and as determined by the LFM supervisor and local environmental requirements.**

10.3.2.2. Issue Hoses. Truck fill stand, marine off-loading, and aircraft refueling hoses must meet the standards of API 1529. Hydrostatically test to one and one-half times the dead head (shutoff head) pressure of the system, not to exceed the maximum working pressure of the hose. ***NOTE:*** Hydrostatic hose testing for real property installed equipment (RPIE) is a joint operator/LFM responsibility, yet primary responsibility lies with the LFM shop foremen. The LFM shop maintains hydrostatic test records and performs the test. Mutual arrangements for hose testing by the refueling maintenance (RFM) shop is authorized and encouraged where possible. Ground product hoses with working pressures less than 20 psi do not require pressure testing.
**FREQUENCY: Prior to initial installation and as determined by the LFM shop foreman, local environmental requirements, and manufacturer's recommendation. When an API 1529 hose is delivered with a hydrostatic certification from the manufacturer, initial testing is not required.**

10.3.3. Storage Tanks.

10.3.3.1. Aboveground Field-Constructed Tanks.

10.3.3.1.1 Visual Inspection. Visually check the exterior of each tank for leaks, corrosion, or irregularities such as tilting, settling, or out-of-roundness. Give special attention to seams and anchor bolts. Maintain a waterproof seal at the tank chime-ring wall foundation interface. Retain records in the LFM shop for five years. Scrape, clean, and repaint rusted or corroded areas.
**FREQUENCY: Monthly.**

10.3.3.1.2. Out-of-Service API 653 Inspection. Use nondestructive techniques to inspect all metallic surfaces, including the floor.
**FREQUENCY: Every 10 years.**

10.3.3.2. Floating Roof or Pan.

10.3.3.2.1. Clean and check perimeter tank seals; check centering of roof or pan. The performance of this task may require a confined space entry.
**FREQUENCY: Monthly.**

10.3.3.2.2. For open-top floating-roof tanks, ensure the center primary roof drain system is water-free, the drip-tight plug is placed in the roof drain opening, and the roof drain valve is closed. The drain valve is kept in the closed position except after each rain or snowfall when it will be opened just long enough to drain the roofline.
**FREQUENCY: Monthly.**

10.3.3.2.3. The LFM shop foreman is responsible for training FMF personnel on procedures for draining floating-roofs and interior dike basins. Once trained, FMF retains responsibility for draining roof drains and interior dike basins.

10.3.3.2.4. At locations where freezing conditions are encountered, the LFM shop will fill the floating-roof tank drain line with antifreeze or deicing fluid. Periodically test the

antifreeze or deicing fluid for proper protection and record results. The roof drain valve must be secured and will have a sign attached to it stating:

**CAUTION - WINTERIZED - DO NOT DRAIN**

**FREQUENCY: As Required.**

10.3.3.3. Tank Inspection/Cleaning Requirements (Aviation Products). Operating and bulk storage tanks have identical inspection/cleaning frequencies. Follow governing environmental regulations if more stringent. Complete AF Form 172 and submit it to the MAJCOM fuels facility engineer.

10.3.3.3.1. Tanks without an inlet F/S, micronic filter on the inlet, or internal coating.
**FREQUENCY: Every 4 years**.

10.3.3.3.2. Tanks with F/S or micronic filter on the inlet **or** internal coating.
**FREQUENCY: Every 6 years.**

10.3.3.3.3. Tanks with F/S or micronic filter on the inlet **and** internal coating, or built to the standard design.
**FREQUENCY: Every 8 years. This may be extended to coincide with the API 653 out-of-service inspection every 10 years after the first inspection is completed.**

10.3.4. Tank Vacuum and Pressure Vents. Inspect, clean, and repair. Where applicable, inspect antifreeze levels in the spring and fall. A mixture of equal parts of water and antifreeze will be used.
**FREQUENCY: Semi-Annually.**

10.3.5. Dikes.

10.3.5.1. Earthen.

10.3.5.1.1. Inspect for signs of erosion and vegetation.
**FREQUENCY: Annually.**

10.3.5.1.2. Use fireproof chemicals for sterilization of dikes and basins to prevent growth of vegetation. Work should be done by BCE entomology personnel or by contract.
**FREQUENCY: As required.**

10.3.5.2. Concrete, Asphalt, or Cement Brick. Inspect condition and repair as required.
**FREQUENCY: Annually.**

10.3.6. Piping.

10.3.6.1. Pressure Test. Pressurize all on-base fuel piping systems using existing system pumps. When conducting the test, follow the guidance outlined in paragraph 2.3.3.1.
**FREQUENCY: Annually.**

10.3.6.2. Hydrostatic Test. Perform a hydrostatic pressure test on all underground fuel transfer lines. Product is normally the test media. Details for conducting the test are provided in paragraph 2.3.3.2. Consult your fuels facility engineer for guidance on completing this requirement. The fuels facility engineer is the approving authority for all waivers of this requirement. Dual pressure temperature compensating pressure test methods may be considered with approval from the MAJCOM fuels engineer. This method may allow the test to be conducted faster with fewer blind flanges than the traditional hydrostatic pressure test described in paragraph 2.3.3.2.
**FREQUENCY: Every 5 years.**

10.3.6.3. Exposed Piping.

10.3.6.3.1. Check all exposed piping, valves, and associated equipment for corrosion. Prepare the surface and repaint as necessary.
**FREQUENCY: Semi-Annually.**

10.3.6.3.2. Piping identification must conform to MIL-STD-161. Repaint as necessary.
**FREQUENCY: Quarterly.**

10.3.7. Pumps.

10.3.7.1. Check for unusual noise, vibration, over-heating, leaks, and oil level.
**FREQUENCY: Quarterly.**

10.3.7.2. Lubricate pumps and motors as recommended by the manufacturer. ***NOTE:*** Excessively greased bearings can cause over-heating.
**FREQUENCY: Quarterly, or as recommended by the manufacturer.**

10.3.7.3. Product Recovery Tank Pump. The pump should start when the liquid level reaches 70% of the tank's total capacity, and shut off when the level is pumped down to 20%.
**FREQUENCY: Quarterly.**

10.3.8. Manual Valves.

10.3.8.1. Lubricated Plug. Inspect all lubricated plug valves for ease of operation. If lubrication is needed due to difficult operation, replace the valves immediately with non-lubricated valves. All lubricated plug valves must be scheduled for replacement.
**FREQUENCY: Quarterly.**

10.3.8.2. Gate. Lubricate and operate to prevent seizing. Adjust/replace packing as needed.
**FREQUENCY: Quarterly.**

10.3.8.3. Non-Lubricated Plug Valves. Inspect for ease of operation. Adjust packing and maintain operators per manufacturer's specifications.
**FREQUENCY: Quarterly.**

10.3.8.4. Ball. Inspect for ease of operation and lubricate operators.
**FREQUENCY: Quarterly.**

10.3.9. Filter Separator (F/S).

10.3.9.1. F/S Element. At the last point of filtration in the fixed system, replace elements at 15 psi DP, or every three years, whichever comes first. Replace elements at all other locations at 20 psi DP, or every three years, whichever comes first. During element replacement, clean the interior surfaces of the F/S vessel and second-stage element(s) (see paragraph 3.3 for detailed instructions). Use API edition 4 or 5 elements. Funding will be provided by DESC.

10.3.9.2. Determining DP. DP is measured at the rated flow of the vessel (e.g., 20 psi at 2271 liters per minute [600 gallons per minute]). If two 2271-liter-per-minute pumps discharge through four F/Ss, then a DP of 10 psi at 1135 liters per minute (300 gallons per minute) would be equal to 20 psi at 2271 liters per minute. Before changing out elements, verify the pressure drop at 2271 liters per minute by isolating the F/S so it receives a flow of 2271 liters per minute and measure the DP. This is particularly critical with Type III systems where fuel from a varying number of pumps flows through multiple F/Ss. In older systems where a 4542-liter-per-minute (1200-gallon-per-minute) filter vessel is dedicated to a 2271-liter-per-minute pump, change out the elements as if it were a 2271-liter-per-minute vessel. If the DP across a vessel suddenly drops 3 psi or more at the same flow rate, check the vessel for a damaged element.

***NOTE:*** Before placing the F/S back in service, contact the FMF to ensure flushing and sampling is accomplished (see T.O. 42B-1-1, *Quality Control of Fuels and Lubricants*).

10.3.10. Micronic Filter. Determine filter element replacement by manufacturer data, or after 757,082 liters (200,000 gallons) of fuel have passed through the elements, whichever occurs first. The MAJCOM fuels engineer may extend the filter replacement based on DP for high through-put installations.

10.3.11. Surge Suppressors. Check pressure settings and adjust in accordance with the manufacturer's specifications.
**FREQUENCY: Quarterly.**

10.3.12. Testing and Calibrating Meters. Component wear and accumulation of solids make periodic calibration necessary.

10.3.12.1. Certified master meters are used for meter calibration by connecting hoses from the hydrant outlet or fill stand to the master meter, and from the master meter to a tank truck or servicing vehicle. Calibrate master meters annually.

10.3.12.2. Test meters at a predetermined flow rate and at calibration settings between 20% and 100% capacity. Meters are satisfactory when the meter error in the normal flow direction is within ±0.2% of actual quantity delivered (e.g., ±1.2 gallons for a 600-gallon test ). Calibrate service station meters to within ±0.2%. Adjust meters according to manufacturer's recommendations. Use stencils or embossing tape to permanently mark the installed meters.
**FREQUENCY: Annually.**

10.3.12.3. Meters with installed drain plugs will be drained of water and sediment by FMF personnel. The LFM shop foreman will ensure drainable meters have the proper connections installed.
**FREQUENCY: Weekly.**

10.3.13. Signs and Markings. Check signs and markings for adequacy and readability. See AFOSH Std 91-38, Section 3.2, for descriptions of sign locations, and MIL-STD-161F2, *Identification Methods for Bulk Petroleum Products Systems Including Hydrocarbon Missile Fuels*, for marking requirements.
**FREQUENCY: Annually.**

10.3.14. Pressure Relief. Check system pressure relief to ensure proper operation. Test and/or adjust the pressure relief valve 10% above system deadhead pressure, not to exceed 275 psi. Repeat the test, if applicable, a minimum of three times to ensure proper operation. Not all pressure relief valves are set at 10% above the maximum operating pressure. Thermal relief valves must be set to allow cascading of pressure back to the storage tank. In this case use set points specified in construction documentation.
**FREQUENCY: Annually.**

10.3.15. Service Station Dispensers. Check operation, belt alignment, strainer, linkage operations, hoses, meter calibration, relief assembly, and automatic nozzle shutoff functions.
**FREQUENCY: Quarterly.**

10.3.16. Direct-Reading/DP Gauges. Calibrate according to the manufacturer's specifications. ***NOTE:*** Piston-type DP gauges require calibration only at USAFE bases. Calibration procedures are in NATO STANAG 3583, *Standards of Accuracy for Different Press Gauges for Aviation Fuel Filters and Filter/Separators*.

**FREQUENCY: Annually.**

10.3.17. Differential Pressure Transmitter (DPT) and Pressure Indicating Transmitter (PIT). Calibrate mechanically and electrically with test equipment and adjust if applicable. Calibrate in accordance with manufacturer's specifications.
**FREQUENCY: Semi-annually.**

10.3.18. Cathodic Protection Systems. Cathodic protection is maintained by the base cathodic protection technician or by service contract. The LFM shop foreman will ensure the cathodic protection systems on the POL system are maintained by the base cathodic protection technician in accordance with UFC 3-570-06, *Operation and Maintenance: Cathodic Protection Systems*, and AFI 32-1054. Close interval (soil-to-structure potential) piping surveys should be conducted initially within 30 days of installation and every five years thereafter.
**FREQUENCY: As required.**

10.3.19. Tank Entry, Confined Space Entry, and other Personal Protective Equipment (PPE). Inspect for serviceability, cleanliness, and deterioration. See Chapter 11 for detailed instructions. Service equipment in accordance with manufacturer's specifications.
**FREQUENCY: Annually, or before use.**

10.3.20. Electrical Equipment. Verify proper operation of all electrical equipment associated with the operation of the installation's POL infrastructure. Identify necessary repairs to the zone or electrical section with responsibility for the area. Typical inspection items include, but are not limited to:

- Ground conductors
- Ground connections
- Starters and Contactors
- Circuit breakers
- Area lighting
- Grounding cables
- Disconnect switches
- Exposed wiring
- Emergency switches
- Flow switches

**FREQUENCY: Quarterly.**

10.3.21. Hydrant Adapters. Check for leaks and damage.
**FREQUENCY: Semi-Annually.**

10.3.22. Automatic Tank Gauges (ATG). Calibrate with test equipment and adjust as required. Ensure the gauge is free of moisture and debris. Many ATGs are maintained by contract under the Petrol Ram Contract. Contact the AFPET office for more information (see paragraph 6.3.2.7).
**FREQUENCY: Annually.**

10.3.23. Strainer. Inspecting and cleaning system strainers is the responsibility of FMF personnel. The LFM shop will supply guidance and/or replacement parts as required.
**FREQUENCY: As required.**

10.3.24. Automatic Control Valves. Following is a list of valves by type of system and valve function. The numbers shown after each valve are Cla-Val designations. Actions and frequencies required below are not limited to Cla-Val, but apply to all manufacturers' valves having the same function. Any automatic valves not listed will have a **Quarterly** RWP frequency. ***NOTE:*** The amount of maintenance required on the listed automatic valves will vary with each inspection. The intent of the inspection is to determine the valves proper operation and performance. If it is determined that the valve is operating correctly, pilot control adjustment and/or main valve calibration is not required.

10.3.24.1. Type I Panero System.

10.3.24.1.1. High Level Shut-Off Valve (HLSO) (124AF). When the tank is being filled, check for proper operation of the HLSO valve. Check high-level alarms with high-level control valves. Set valve to activate when the fuel level is approximately 11 inches from the top of the tank—this should be no more than 95% full.
**FREQUENCY: Semi-annually.**

10.3.24.1.2. Non-Surge/Check Valve (81AF). Check opening speed (approximately 20 seconds) and check valve function.
**FREQUENCY: Semi-annually.**

10.3.24.1.3. Fuel Shut-Off Control Valve (FSCV) (40AF-2A).

10.3.24.1.3.1. Flow Rate. Check flow rate. Flow rate is determined by F/S vessel gallon-per-minute rating, or element flow rate, whichever is less.
**FREQUENCY: Semi-annually.**

10.3.24.1.3.2. Water Shut-off. Test FSCV, either by engaging the flanged float test button or lever while flowing fuel through the F/S, or by injecting water until the ball float is in the "up" position. Ensure the FSCV shuts off when the ball float is in the "up" position. When the mission mandates the use of water drain valves, check the drain valve operation also. Drain water immediately upon completing the test.
**CAUTION**: When performing this test, only flow the minimum amount of fuel through the F/S to prevent system pressure spikes. Check FSCV on 50-gallon-per-minute product recovery tank pumps. Newer Type III systems have FSCVs with emergency shutdown capability.
**FREQUENCY: When elements are changed.**

10.3.24.1.4. Fueling/Defueling Control Valve (302AF). Check both refueling and defueling control valve features. Check pressure-reducing control, pressure-relief control, opening rate, excess flow shutoff, defuel pressure-relief control, and solenoid operation. See Chapter 3 for pressure setting procedures.
**FREQUENCY: Quarterly.**

10.3.24.2. Type II Pritchard System.

10.3.24.2.1. Refueling Control Valve (90AF-8). Check pressure-reducing control, pressure-relief control, opening rate, excess flow shutoff, and solenoid operation. See Chapter 4 for pressure setting procedures. For excess flow control, see Attachment 3.
**FREQUENCY: Quarterly.**

10.3.24.2.2. Defuel Control Valve (134AF). Check solenoid operation.
**FREQUENCY: Quarterly.**

10.3.24.2.3. Rate-of-Flow Defuel Valve (41AF). Check rate of flow control and check valve function. Set flow rate at 200 gallons per minute.
**FREQUENCY: Quarterly.**

10.3.24.2.4. Pressure Relief Valve (50AF-2). Check pressure-relief function. The typical pressure setting is 10 psi above normal inlet pressure for the 90AF-8.
**FREQUENCY: Semi-annually.**

10.3.24.2.5. High-Level Shut-Off Valve (129AF). When the tank is being filled, check for proper operation of the high-level control valve. Check high-level alarms with high-level control valves. Set shut-off level at 11 inches from the top of the tank or 95% full, whichever is less.
**FREQUENCY: Semi-annually.**

10.3.24.2.6. Non-Surge Check Valve (81AF-8). Check opening speed (about 20 seconds) and check valve function.
**FREQUENCY: Semi-annually.**

10.3.24.3. Type II Modified Pritchard System.

10.3.24.3.1. Combination Rate-of-Flow, Solenoid Shutoff, and Check Valve (41AF-10). Check rate-of-flow control, check-valve function, and solenoid functions. Set at 200 gallons per minute.
**FREQUENCY: Quarterly.**

10.3.24.3.2. Combination Dual Pressure Relief, Solenoid Shutoff, and Check Valve (51AF-4). Check low- and high-pressure relief functions, check-valve function, solenoid functions, and closing speed control. See Chapter 5 for pressure setting procedures.
**FREQUENCY: Quarterly.**

10.3.24.4. Type III Constant-Pressure Hydrant Fueling System (Phillips System).

10.3.24.4.1. High-Level Shut-Off Valve (413AF-5A). When the tank is being filled, check for proper operation of the high-level control valve.
**CAUTION:** When testing, use the minimum flow rate necessary.
**FREQUENCY: Semi-annually.**

10.3.24.4.2. Rate of Flow, Non-Surge Check Valve (41AF-1A). Check opening speed, flow rate, and check-valve function. The typical opening speed is approximately 20 seconds. The typical flow rate is 650 gallons per minute.
**FREQUENCY: Semi-annually.**

10.3.24.4.3. Fuel Shut-off Control Valve (41AF-2C). Check rate of flow, check-valve function, and water shutoff features. The typical setting is 600 gallons per minute.
**FREQUENCY: Semi-annually.**

10.3.24.4.4. Back Pressure Control Valve (58AF-9). Check pressure control, closing rate speed, solenoid operation, and check-valve function. The typical setting is 100 psi at the inlet of the furthest hydrant outlet, and set closing speed control as fast as possible while still maintaining smooth operation. ***NOTE:*** This valve typically uses a restrictor to aid in opening.
**FREQUENCY: Quarterly.**

10.3.24.4.5. Defuel/Flush Valve (58AF-9-1). Check pressure relief, check-valve function, solenoid operation, and opening and closing speed controls. The typical pressure relief

setpoint is 80 psi. Set the opening and closing speed control as fast as possible while still maintaining smooth operation.
**FREQUENCY: Quarterly.**

10.3.24.4.6. Pressure Control Valve (58AF-3). Check pressure control, opening and closing rates, and solenoid operation. The typical setpoint is 75 psi. The typical opening and closing speed is 3 seconds.
**FREQUENCY: Quarterly.**

10.3.24.4.7. Hydrant Control Valve (362AF-8). Check pressure-reducing control, pressure-relief control, opening speed, and deadman operation. ***NOTE:*** HCV is also located at the HSV check-out stand.
**FREQUENCY: Quarterly.**

10.3.24.4.8. Emergency Shut-Off Valve (136AF-9B). Check solenoid operation, DP control, and quick-closing feature. Verify valve closes within 10 seconds. Solenoids are energized, except during power failures or when the ESO switch is activated. The typical setting for differential control is 7 psi.
**FREQUENCY: Quarterly.**

10.3.24.4.9. Product Recovery Tank Overfill Valve (2129AF). Check the thermal-relief feature, overfill-protection operation, and ensure the pressure reservoir tank holds pressure. The typical setting for thermal relief is 200 psi. The OV must be set to close and sound an alarm in the control room when the tank is 80% full. Ensure the pressure reservoir tank holds the pump deadhead pressure when the pump is deactivated. ***NOTE:*** When the float in the tank rises and the OV changes position, the pressure in the pressure reservoir tank will decrease.
**FREQUENCY: Semi-annually.**

10.3.24.5. Type IV Hot Pit Refueling System.

10.3.24.5.1. High-Level Shut-Off Valve (129AF-3A). When the tank is being filled, check for proper operation of the high-level control valve. This valve uses a fail-safe closed pilot system. This means that if the control line ruptures, the main valve will close.
**CAUTION:** When testing, use the minimum flow rate necessary.
**FREQUENCY: Semi-annually.**

10.3.24.5.2. Defuel/Flush Valve (58AF-9-1). Check pressure relief, check-valve function, solenoid operation, and opening and closing speed controls. The typical pressure relief setpoint is 100 psi. Set the opening and closing speed control as fast as possible while still maintaining smooth operation.
**FREQUENCY: Quarterly.**

10.3.24.5.3. Pantograph Pressure Control Valve (PPCV) (58E-47). Check pressure control, opening and closing rates, and solenoid operation. The typical setpoint is 75 psi. The typical opening and closing speed is 3 seconds.
**FREQUENCY: Quarterly.**

10.3.24.5.4. Hydrant Control Valve (362AF-7). Check pressure-reducing control, pressure-relief control, opening speed, and deadman operation. The typical setting for pressure-reducing control is 45 psi. The pressure-relief control must close within 5 seconds when system pressure reaches 50 psi. The typical opening speed is 20 seconds; however, to dampen the nozzle pressure wave, opening speed may be retarded. When the deadman is

released, the deadman must close the valve within 5 seconds. ***NOTE:*** This valve is connected to the pantograph system and is hydraulically operated.
**FREQUENCY: Quarterly.**

10.3.24.5.5. Emergency Shut-Off Valve (136AF-9B). Check solenoid operation, DP control, and quick-closing feature. Verify valve closes within 10 seconds. Solenoids are energized except during power failures or when the ESO switch is activated. The typical setting for the differential control is approximately 7 psi.
**FREQUENCY: Quarterly.**

10.3.24.5.6. Flush Valve (136AF-5A). Check solenoid operation and quick-closing feature. Solenoid is de-energized when the system is placed in pantograph flush.
**FREQUENCY: Quarterly.**

# Chapter 11

## ENTRY FOR INSPECTING, CLEANING, REPAIRING, AND COATING LIQUID PETROLEUM TANKS

**11.1. Introduction.** This chapter provides minimum standards for safe entry, inspection, cleaning, repairing, and coating of liquid petroleum tanks. The names formally used to describe LFM tank-cleaning positions (tank cleaning supervisor, worker, manhole observer, fresh air blower monitor, safety [emergency] person) have been changed to align the LFM career field with the Air Force Confined Space Entry Program (CSEP). The new names: tank entry supervisor (TES); entrant; attendant; regulator monitor; and organizational rescue team (standby rescue personnel), respectively.

**11.2. Standards.**

11.2.1. For all tank cleaning and related functions, follow the guidance in API Std 2015, *Safe Entry and Cleaning of Petroleum Storage Tanks, Planning and Managing Tank Entry from Decommissioning through Recommissioning*. API Std 2015 contains a comprehensive planning checklist in Appendix E. The rest of the paragraphs in this chapter tailor guidance in the API publication to the LFM requirement.

11.2.2. The following AFOSH standards are to be used in lieu of the OSHA standards covered in the API publication:

11.2.2.1. AFOSH Std 91-25, *Confined Spaces* (49 CFR 1910.146, *Permit-Required Confined Spaces*).

11.2.2.2. AFOSH Std 91-31, *Personal Protective Equipment* (PPE).

11.2.2.3. AFOSH Std 91-38, *Hydrocarbon Fuels, General*.

11.2.2.4. AFOSH Std 48-137, *Respiratory Protection Program.*

11.2.2.5. AFOSH Std 48-8, *Controlling Exposure to Hazardous Materials.*

11.2.2.6. AFOSH Std 91-5, *Cutting and Brazing.*

**11.3. TES Certification Requirements.** The TES is responsible for all aspects of tank entry and must have an AF Form 483, **Tank Cleaning Certificate of Competency** card issued by the MAJCOM fuels engineer. Certification will not exceed five years from the completion date of the Air Education and Training Command (AETC) TES course. The MAJCOM fuels engineer may approve a one-year waiver. Certificates are not transferable between MAJCOMs. Submit the following to the MAJCOM fuels engineer for certification:

11.3.1. Certification of Training. Forward a copy of the AETC TES course completion certificate (AF Form 1256, **Certificate of Training**). This course is mandatory for certification and must be redone every five years. A one-year waiver may be approved by the MAJCOM fuels engineer to allow for scheduling difficulties.

11.3.2. Tank Cleaning Experience. List at least two tanks cleaned, showing dates, size, location, and tank-cleaning supervisor.

11.3.3. Medical Evidence. Applicant is physically qualified to perform tank cleaning.

**11.4. Tank Entry Personnel Requirements.**

11.4.1. Medical Requirements. Prior to entry and or cleaning operations, each tank entrant (military or civilian) must have proof of a current physical (AF Form 600, **Treatment Record**, or equivalent), or an appropriate medical statement from the local medical facility stating the applicant is physically qualified to perform tank cleaning. Medical statements are valid for one year. Provide an AF Form 2772, **Certificate of Respirator Fit Test**, or equivalent showing the individual has been fit-tested to wear a respirator.

11.4.2. Health Effects. Colds, fatigue, overheating, or lowered physical resistance from any source increases a person's susceptibility to hazards encountered in tank entry.

11.4.3. Psychological Effects. Anyone with a medically documented history of claustrophobia will be disqualified from entering any tanks.

**11.5. Confined Space Entry Requirements.** AFOSH Std 91-25 contains requirements for practices and procedures that provide protection for Air Force employees (military and civilian) who enter and work within confined spaces. Information in AFOSH Std 91-25 is considered the Air Force's *minimum* safety, fire prevention, and occupational health requirements.

**11.6. Tank Cleaning Crew.**

11.6.1. Crew Members. The typical crew size for tank entry is five: TES; entrant; attendant; regulator monitor (duties may be performed by the attendant if conditions allow); and organizational rescue team (standby rescue personnel). Additionally, a pump or compressor operator may be required. Individuals assigned these duties will not leave their positions until relieved by the TES. Any deviation from the above must be coordinated with the MAJCOM fuels engineer.

11.6.2. TES. The TES, also referred to as the entry (on-site) supervisor, is responsible for all aspects of tank entry and stays at the job site until all individuals have exited the tank. The TES only transfers supervisory responsibility when he or she enters the tank. Before entry, the TES appoints an equally qualified individual to run operations while he or she is in the tank.

11.6.2.1. The TES ensures all workers are properly trained on safe tank entry procedures, use of protective equipment, and ways to egress the confined space.

11.6.2.2. The TES must review as-built drawings to become familiarized with tank components and appurtenances.

11.6.2.3. Before starting any tank entry project, the TES briefs all members of the tank entry crew. The briefing includes: duties of each member; hazards affecting the entry; component inspection requirements; worker actions if there is an emergency; length of time each person will be in the tank; effects of inhalation; other health and safety aspects inherent to the entry.

11.6.2.4. The TES must follow the confined space entry procedures outlined in AFOSH Std 91-25, Paragraph 2.13. For additional information, use the planning checklist in AFOSH Std 91-25, Appendix E, as a guide to develop a site-specific work plan.

11.6.3. Entrant. The entrant is the individual trained, qualified, and authorized to enter the confined space. Entrants must:

11.6.3.1. Fully understand all cleaning procedures, inspection requirements, safeguards, and emergency egress and or rescue procedures associated with the entry.

11.6.3.2. Follow all safe work procedures required by the TES.

11.6.3.3. Notify the TES when hazards exist that have not been corrected.

11.6.3.4. Notify the TES if he or she is ill or on medication.

11.6.3.5. Immediately exit the tank when directed by any member of the tank cleaning crew or when they recognize the warning signs of exposure to hazardous substances.

11.6.4. Attendant. The attendant stays outside the tank and monitors the entrants inside. The attendant should maintain continuous communication with all authorized entrants, by voice, visual observation, communications gear, or other equally effective means.

11.6.4.1. The attendant has the authority to order entrants out of the tank at the first sign of an unexpected hazard.

11.6.4.2. The attendant must know the procedure and have the means to summon emergency assistance if needed. They must stay at their post and not leave for any reason (except self-preservation) unless replaced by an equally qualified individual.

11.6.4.3. The attendant continuously monitors the atmospheric levels while the entrants are inside the tank.

11.6.5. Regulator Monitor. The regulator monitor is the individual that is responsible for ensuring an uninterrupted supply of breathing air is provided to all workers in the tank. Self-contained breathing apparatus (SCBA) systems must always be monitored while workers are inside the tank. If only minimum manning is available, the attendant can double as the regulator monitor. This individual must be able to see the gauges, hear the warning devices, and summon workers out of the tank if an unacceptable condition arises. Also, the regulator monitor must:

11.6.5.1. Be fully trained on the operation of the air regulator, alarms, warning devices, and proper setup of the air bottle or cascade system.

11.6.5.2. Ensure all equipment is in proper working order and has been thoroughly operationally checked prior to workers entering the tank.

11.6.5.3. Notify the attendant or TES of any condition that could hinder the supply of air to workers inside the tank.

11.6.5.4. Monitor air equipment and low-air warning devices until all workers exit the tank and remove their masks.

11.6.6. Organizational Rescue Team**.** This team includes the TES, attendant, and at least one stand-by rescue person for each individual inside the tank. . For aboveground storage tanks that are less than 12 meters (40 feet) in diameter with two open manways, only one stand-by rescue person is required for every two men in the tank. If two workers are inside the tank, then two rescue people will be standing by equipped with the appropriate PPE. All rescue personnel must meet the training requirements outlined in AFOSH Std 91-25, Paragraph 5.5, and the training requirements of the entrant. Members of the organizational rescue team can be trained locally or in technical school in the correct performance of their assigned duties. Also, members must be trained annually in CPR.

CPR training will be documented on the individual's AF Form 55, **Employee Safety and Health Record**. The team should practice once per year.

**11.7. Tank Entry Coordination**. Before entering the tank, coordinate with the following:

11.7.1. Coordinate entry date with FMF. Before FMF lowers the fuel level, set the floating roof or pan adjustable legs to the 1.8-meter (six-foot) level. Follow confined entry requirements and refer to API Publication 2026, *Safe Access/Egress Involving Floating Roofs of Storage Tanks in Petroleum Service*.

11.7.2. Notify Environmental Management (CEV) of scheduled operations to ensure adequate waste disposal containers are available and disposal procedures are identified.

11.7.3. Upon coordination with FMF, request permission from the MAJCOM fuels engineer for tank entry at least fifteen workdays before the desired entry date. Include the dates of work, facility/tank number, size, type of fuel, purpose of entry, and name of the TES.

11.7.4. Notify base Ground Safety (SEG), Fire Protection (CEF), and BEE during this fifteen-day period to ensure adequate procedures are in place for safety, fire prevention, and rescue during the operation.

**11.8. Tank Entry Preparation.**

11.8.1. Ensure the entire area next to the work site is secured and cleared of all non-essential personnel. If the area cannot be isolated by using existing fencing, use rope to establish a perimeter at least 15.2 meters (50 feet) from the tank openings. Provide warning signs (e.g., "DO NOT ENTER TANK ENTRY IN PROGRESS") to identify the area. Post appropriate vehicle and pedestrian guards as necessary.

11.8.2. Remove all ignition sources from the surrounding area. Personnel entering the area must leave all flame-producing devices at a previously determined location.

11.8.3. Inspect the work area, equipment, and tools for identifiable hazards and make all necessary corrections prior to tank entry. Place equipment upwind of tank openings and at the highest elevation possible, never in an area lower than the surrounding terrain.

11.8.4. Inspect grounding and bonding cable connection points, wires, and clips for good condition, and check electrical continuity with an ohmmeter. Replace damaged and broken items immediately.

11.8.5. Turn off cathodic protection prior to disconnecting pipelines from the tank.

11.8.6. Verify PPE is available, in proper working order, and all personnel are trained in its use.

11.8.7. Test the area around the tank for explosive vapors using a combustible gas indicator before any equipment is started which may be a source of ignition.

11.8.8. Ensure an emergency shower/eyewash is available in the immediate area. Portable emergency eyewash units are authorized, but should be as recommended by the BEE.

11.8.9. Consider weather conditions. Stop work if an electrical storm is threatening or in progress, or the direction of the wind might carry vapor into any area where it could produce hazardous conditions.

## 11.9. Emptying the Tank.

11.9.1. Once the operators have removed as much of the petroleum product as possible using existing installed pumps, remove all remaining fuel with portable pumps. Pump or drain fuel to the lowest possible level through the pump-out connection or water draw-off line.

11.9.2. Use air-operated, double-diaphragm-type pumps to remove sludge and excess water and or fuel effluent from the work site. Do not use equipment powered by an internal combustion engine unless it is equipped with a flame arrestor and a protected ignition system. If used, locate gasoline-driven engines and electric explosion-proof motors upwind at least 15.2 meters (50 feet) from an open manhole or vent, or locate it just outside the dike.

11.9.3. Store remaining on-specification fuel in accordance with instructions from the FMF. Dispose of waste products in accordance with BCE environmental coordinator requirements.

## 11.10. Isolating the Tank.

11.10.1. Lockout and blind or blank all valves and drain lines, and bypass pressure relief lines to prevent any product from entering the tank.

11.10.2. Lockout/tagout all electrical equipment and necessary valves. Isolate all piping by removing valves and installing blind flanges, or by installing spectacle blinds or skillet flanges to prevent fuel or vapors returning to the tank.

11.10.3. Blind and spectacle flanges must be able to withstand any system pressure to which they may be subjected. If spectacle blinds are used, insert them between the tank valve and the flange nearest the tank.

11.10.4. A DBB valve may be used in lieu of blind or spectacle flanges if it can be chained or locked closed and the cavity bleed valve is opened and observable.

11.10.5. **CAUTION:** Do not remove valves or disconnect piping from any equipment components until it is certain that the line has been emptied of fuel and a bonding cable has been installed between pipe flanges.

## 11.11. Vapor Freeing.

11.11.1. Ventilate the tank using air-operated eductors, such as COPIS or Lamb air movers. Remove the roof and shell manhole covers to allow air to circulate freely. Use natural ventilation to aid in removing vapors. Do not use air movers that blow into the tank.

11.11.2. Fuel vapors are heavier than air, and usually accumulate in the bottom of tanks. Blowing air into a tank can dilute the vapors, but it may take longer for the vapor-air ratio to drop to an acceptable level. Eductor-type air movers with a flexible oil-proof hose inserted near the bottom of the tank will educt vapors in a shorter period of time.

11.11.3. Consider local conditions when placing ventilating equipment. Usually, it is preferable to exhaust the vapors through roof manholes. This ensures the maximum diffusion of vapors into the surrounding air and reduces the possibility of a flammable mixture concentrating at ground level. Regardless of the method used, eliminate sources of ignition in the path of vapors.

11.11.4. Continue ventilation until the tank is essentially vapor-free or the fuel vapors are replaced with fresh air. The principal consideration for vapor freeing is to help the removal and disposal of

fuel sludge and displaced vapor in a way that will reduce the possibility of any hazardous condition (toxicity, asphyxiation, fire, explosion) inside the tank and in the surrounding area.

11.11.5. Ensure eductor-type air-movers have been operating continuously until the tank is safe to enter. Operate eductors for at least one hour or until LEL and oxygen are within safe limits immediately prior to entrants entering the tank and throughout the operation to maintain a safe explosive level.

11.11.6. Everyone entering must wear an approved supplied air respirator (SAR) with emergency-egress SCBA until the tank is declared hazard-free as specified in AFOSH Std 48-137, Paragraph 4.2.2.2.

11.11.7. All tanks being cleaned or repaired must be considered explosive until all sludge and loosely adhering rust and scale has been removed, regardless of the type of stored fuel.

11.11.8. All tanks being cleaned or repaired must be considered leaded unless positive proof exists that the tank has never contained leaded fuel, or the tank has been coated using the Air Force standard epoxy tank-coating system and has not held leaded fuel since. Before tank entry is authorized without PPE, the LEL reading must be zero, oxygen levels between 19.5% and 23.5%, and lead, benzene, and other toxic material levels within safe limits. Refer to API Standard 2015 for additional information.

## 11.12. Atmospheric Testing.

11.12.1. Temporarily stop ventilation and perform vapor testing from outside the tank. Test the interior of the space by extending a hose and sample probe within 152 millimeters (6 inches) of the tank bottom. Repeat every fifteen minutes for the duration of the operation. See AFOSH Std 91-25, Paragraph 3.3.8, for testing sequence. Workers may enter the tank when vapor levels are below 10% of LEL if they are equipped with approved SAR with emergency SCBA. Never enter a tank without proper respiratory protection unless the LEL is zero, the oxygen level is within tolerances (19.5% to 23.5%), and the BEE has determined that airborne benzene and other toxic vapors are within permissible exposure limits.

11.12.2. Vapors will be present as long as fuel, scale, or sludge are inside the tank. Operate air eductors continuously until all these materials have been removed.

11.12.3. Noisy units may be shut down while workers are in the tank if they impair the ability of attendants to communicate with entrants.

11.12.4. Do not work within the tank until the vapor readings are below 10% LEL. If entry is required when the LEL is above 10%, the TES will follow the procedures outlined in AFOSH Std 91-25, Paragraph 6, and notify the command fuels engineer. The TES, with the installation confined space program team (CSPT), will confirm whether the entry is permissible under local conditions.

11.12.5. Reasons for not being able to get vapor readings below the 10% LEL, or in some cases below 20% LEL, are:

11.12.5.1. Insufficient time to reduce vapor concentrations (which in turn can affect base mission requirements and maintenance costs).

11.12.5.2. The size and type of tank and the amount of fuel and solid sludge to be removed.

11.12.5.3. The methods and facilities available for floating and removing fuel sludge and hosing down the tank are not adequate.

11.12.6. In the case of special fuels, ensure combustible gas vapor indicators will detect vapors of the special fuel.

## 11.13. Initial Tank Cleaning from Outside the Tank.

11.13.1. After completing the pre-entry procedures, begin the initial inspection or cleaning from outside the tank. Continue ventilating during initial operations, where possible, to ensure the removal of vapors from the tank. Test frequently for explosive vapors. Stop cleaning operations if the vapor concentration rises above 20% of the LEL.

11.13.2. Direct water streams through open man-ways to dislodge scale, sludge, and fuel residue, and float it to a water draw-off or pump-out connection. Disposal costs are high, so use water sparingly. Pressure washers are a means to speed cleaning while conserving water. If used, ensure pressure washer nozzle is electrically bonded to the tank.

11.13.3. Place the fuel-water-sludge mixture in drums or a portable tank, and dispose of sludge in compliance with state and local environmental laws. Contact the BCE environmental coordinator for the proper disposal method.

11.13.4. Stop hosing down the tank when the vapor level is 20% LEL or higher.

11.13.5. Use air-driven, double-diaphragm-type pumps for removing sludge and excess water.

## 11.14. Tank Entry.

11.14.1. After initially cleaning the tank from the outside, continue ventilation and vapor readings at the manhole or equipment to determine when entry can be made. Once the vapor indicator registers 10% LEL or less, entry is authorized. Since vapors will be present as long as fuel, scale, or sludge remains inside the tank, continue forced ventilation until all such material has been removed.

11.14.2. All entrants must be equipped with approved PPE.

11.14.3. Maintain an uninterrupted air supply until all persons are out of the tank and have removed their facepieces. Anyone wearing PPE detecting an odor (such as fuel) must leave the tank immediately and not re-enter until the cause has been determined and equipment repaired or replaced.

11.14.4. Repeat tests for explosive vapors at fifteen-minute intervals while workers are in the tank. Stirring sludge releases vapors and increases the vapor concentration. Remove puddles of fuel-water-sludge to keep vapor readings below 20% LEL.

11.14.5. After removing sludge from the tank and with personnel wearing PPE, scrape the bottom of the tank and 0.9 meter (3 feet) up the sides until all loosely adhering rust and scale have been removed from the tank. Wash down the remainder of the tank with high-pressure hoses. Include the metal supports, braces, the upper portion of horizontal tanks, and the decks (tops) of vertical tanks. Wash these areas until the water pumped out of the tank is clean.

11.14.6. Water discharged from the tank must be contained and disposed of as instructed in paragraph 11.13.3.

11.14.7. Once washing is completed, allow the floor to dry. When interior tank vapor readings are 0% of the LEL on unleaded tanks, personnel may enter the tank without protective equipment if the testing required by API Standard 2015 has been done, and the BEE determines that airborne benzene and other toxic vapors are below the permissible exposure limits. See AFOSH Std 91-25 or contact the MAJCOM fuels engineer for additional guidance.

11.14.8. A clean dry tank that has been ventilated overnight has the best prospect for entry without protective gear.

11.14.9. Pipes used for center poles and braces, pontoons, and leaking bottoms are potential sources of explosive vapors even after the tank is cleaned. In as little as one to two hours a safe tank may reach the explosive range because of these sources. While unprotected personnel are in the tank, take readings at least every fifteen minutes. Where pontoon-type pans/roofs are installed in aboveground tanks, check each pontoon with a vapor indicator.

11.14.10. Petroleum products irritate and burn the skin and may cause serious discomfort and injury. Promptly remove clothing that becomes splashed with sludge or fuel to prevent contact with the skin. Before continuing work, wash the affected area with soap and water (if a small area), or shower and put on a fresh change of clothing. Clothing contaminated by petroleum products should be kept away from any source of ignition because vapor given off by such clothing is a serious fire hazard.

11.14.11. Unless a full-face respirator is worn, wear goggles during scraping and wire-brushing scale and spreading loose absorbent material. If hands are frequently wet with fuel and it is not practical to wear protective gloves, the hands may be coated with any commercial non-greasy cream that gives the desired protection. ***NOTE:*** If work site has contained leaded gasoline, approved protective gloves or other impermeable gloves must be worn throughout the operation.

11.14.12. Keep the manhole, pumphouse access area pit walls, and adjacent area clear of equipment or material that would hamper rescue operations in an emergency situation.

## 11.15. Repairs.

11.15.1. Cold work involves work or repairs that do not produce heat, sparks, or other forms of energy sufficient to produce an ignition source if a vapor-air mixture in the flammable range is present. If cold repair work in or on a tank results in perceptible dust, wear goggles and a respirator approved by the BEE.

11.15.2. A tank that once contained leaded gasoline must be free of sludge and all non-adherent material must be removed from the inside of the tank surface before cold work is performed. After cleaning, at least sixteen hours' natural ventilation is recommended before using powered air movers. After the tank has been vapor-freed, test it for lead per API Standard 2015, Appendix D.4. If it is within tolerances, consider it lead-hazard-free, provided the tank surfaces are not heated, there are no absorbent materials that will release organic lead, and there are no leaks. Continue testing for lead in the air during repair work. An alternative is to always use SAR with emergency SCBA during inspection, cleaning, and repair operations of tanks that have held leaded fuel regardless of the vapor reading.

11.15.3. When making repairs involving hot work (e.g., welding, grinding, cutting), sandblasting, or shot-blasting, clean the tanks for safe entry without PPE. Also, clean all tank surfaces that have been in contact with leaded gasoline down to the bare metal in areas that might become excessively hot.

Test frequently to verify that the atmosphere of the entire tank remains substantially free of hydrocarbon and lead vapors.

11.15.4. When removing the interior tank coating, clean and grit-blast the walls to the bare metal. If the coating has a high lead content, the method used for removal (burning, cutting, or grit blasting) may result in a significant and additional hazard from lead vapor. Use an approved lead-vapor respirator when working on inside surfaces. Before starting, verify the tank is free of hazards from both petroleum and lead. The welder's facepiece, used with an SAR, protects against the hazards of lead and lead fumes from coatings.

11.15.5. Vapor may enter through leaks in the tank bottom, or vapor pockets may exist in hollow roof support columns or floating pan pontoons. Get advance approval from the MAJCOM fuels engineer for hot work on any portion of POL facilities. This is required for both in-house or contract work.

11.15.6. Use only an API-certified welder when welding on POL facilities. Requirements are outlined in API standards and ASME *Boiler and Pressure Vessel Code*, Section IX. At oversea locations, certification may follow host nation standards and or requirements.

11.15.7. Obtain an AF Form 592, **Welding, Cutting, and Brazing Permit,** from the installation fire department when workers perform hot work operations within a tank (see AFOSH Std 91-5). If hazards may be introduced into the tank during hot work, contact the BEE to evaluate the potential hazard and recommended ventilation procedures. See AFOSH Std 91-25, Paragraph 6.6, which provides additional worker requirements.

11.15.8. Any area suspected of leaks (seams and new repair work) may be tested with a vacuum box. The vacuum box is a rectangular frame (generally 0.3 meter [12 inches] wide by 0.7 meter [30 inches] long by 152 millimeters [6 inches] deep) fitted with a glass top, and with a rubber seal around the bottom edge. A manual or motor-driven pump is used to create a 50- to 101-millimeter (2- to 4-inch) vacuum within the box. Soapsuds are placed over the area to be tested, and the vacuum box is placed over the area with the rubber seal making an airtight contact between the tank surface and the box. A vacuum is then developed within the box. If the vacuum box is moved over a leak, the leak will be shown by activity in the soap bubbles over the leak.

11.15.9. The current interior tank coating system has a projected life of more than thirty years. In most cases, failures should be minimal and touch-up painting, if any, is all that should be required. If extensive failure is observed, advise your MAJCOM fuels engineer. Repair the coating using the epoxy coating system in Navy Guide Specification Section 09973. Pay strict attention to surface preparation since it is key to a successful job.

## 11.16. Returning to Service.

11.16.1. After the tank has been cleaned and all repairs have been made, the TES will re-enter and inspect the tank.

11.16.2. After inspection, and before the tank is returned to service, conduct operational tests to demonstrate functional capabilities. Reinstall all valves, piping, and manhole covers using new non-asbestos gasket material compatible with the product being stored. Gasket thickness must not be less than the thickness of the gasket replaced. Restore the entire area to its original condition. Do not fill the tank faster than a fill-line velocity of 0.9 meter (3 feet) per second until the pan is floating freely on the product and the fill lines in all other tanks are completely submerged under fuel.

11.16.3. At the completion of a tank inspection or cleaning operation, the TES ensures the tank is stenciled in either 19- or 25-millimeter (0.75- or 1-inch) letters. The TES may, with the approval of the MAJCOM fuels engineer, record the same information on AF Form 172 in lieu of stenciling it to the tank or manhole cover. On aboveground tanks, the information will be placed on or next to the manhole cover. On underground tanks, stencil the manhole cover or tank pit wall. ***NOTE:*** Additional information can be stenciled on the tank showing that the tank was cleaned by a contractor and inspected by in-house personnel.

LAST CLEANED or INSPECTED - 18 MAY 01

IN-HOUSE - 52 CES

SUPERVISOR - MSGT SHAFFER

DATE CLEANED or INSPECTED - 18 MAY 01

CONTRACTOR - ALLIED TANK INC.

ADDRESS - 1107 SHEPPARD WAY

SEATTLE, WASHINGTON 08897

**11.17. Inactivation.** See MIL-HDBK-1022A, Sections 13 and 14, and API RP 1604, *Closure of Underground Petroleum Storage Tanks*, for instructions.

**11.18. Tank Entry Equipment and Personnel Clothing.** The TES makes sure necessary equipment and clothing is on hand. He or she inspects and approves equipment and clothing annually and before tank entry. Reference AFOSH Std 91-31, Paragraph 2.12, and Chapter 3. Required equipment and clothing includes (but is not limited to) the following:

11.18.1. Electrical Equipment. All electrical equipment and conductors used within 15.2 meters (50 feet) of fuel pipes or storage tanks, or where a hazardous accumulation of flammable vapors may exist, will be Class I, Division I, Group D. The maximum temperature rating will be "T2D" – 419 °F (215 °C), as defined in the NEC for use in hazardous (explosive) areas.

11.18.2. Gasoline Engine Equipment**.** Equip all gasoline-engine-driven equipment used in a tank-cleaning operation with a flame arrester and a protected ignition system.

11.18.3. Combustible Gas (Vapor) Indicator. Although manufacturers make many claims, there are significant differences in accuracy between instruments. The instrument used by LFM to detect vapor-air mixtures will be the Air Force-approved centrally procured item because it has been tested and selected based on proven performance.

11.18.4. Air Movers. All air movers used will be of the eductor type (COPIS or Lamb air mover) capable of educting vapors from the tank, and will be either air-driven or explosion-proof electrically operated. Electrically operated air movers will be rated for Class 1, Division 1, Group D, as defined by the NEC for use in hazardous locations.

11.18.5. Portable Lights. Only use explosion-proof portable battery-powered lights or low-voltage lights that are rated for use in Class 1, Division 1, Group D, as defined in NFPA 70, NEC, Article 500, *Hazardous Locations*.

11.18.6. Cleaning Equipment and Supplies. Provide buckets, scrapers, squeegees, rags, mops, brooms, brushes, and scoops where necessary. Brooms or brushes with plastic or synthetic bristles are not authorized. An adequate supply of disinfectant solution and cotton swabs will be needed to clean facemasks. ***NOTE:*** The disinfectant solution will either be hypochlorite solution (50 parts per million chlorine) or an aqueous iodine solution (50 parts per million iodine).

11.18.7. Impermeable gauntlet-type rubber gloves will be provided for each person handling hazardous materials. Provide an extra pair for emergency use. Inspect gloves to verify they are impermeable to tetraethyl lead (acid-proof rubber) and in serviceable condition. Gloves must be pliable to ensure against cracking while in use.

11.18.8. One-quarter-length boots (knee-length boots are acceptable) with non-slip soles. Inspect boots to ensure they are impermeable to tetraethyl lead (acid-proof rubber) and are in serviceable condition. Inspect boot soles for excessive wear to prevent slipping while inside the tank.

11.18.9. Tyvek® disposable coveralls should be provided in a light color with a static-dissipating coating. Also provide light-colored cotton coveralls as needed. Before use, inspect cotton coveralls to ensure they are not equipped with metal fasteners. Inspect both types of coveralls for serviceability.

11.18.10. Respirators will be supplied-air-type with escape SCBA (Type “C” respirator). Select and use respirators approved by the National Institute for Occupational Safety and Health (NIOSH) or the Mine Safety and Health Administration (MSHA), according to AFOSH Std 48-137, Chapter 4. Store in a cool (4.5 °C [40 °F] to 21 °C [69 °F]) place, away from direct sunlight. The rescue person should have a 30-minute self-contained air source to ensure he/she has a fresh air supply.

11.18.10.1. Personnel cleaning Air Force petroleum storage tanks will not use portable oxygen tanks and masks, portable gas masks, or “walk-around” oxygen bottles and masks as the sole source of air.

11.18.10.2. Each individual issued a respirator is responsible for its primary maintenance and care. Clean and disinfect each respirator, and check it for serviceability, including inspecting straps, lens, hoses, emergency egress air bottle, and connectors.

11.18.10.3. Prescription lenses or spectacle kits are available from the manufacturer. **Contact lenses are not authorized for use with respirators.**

11.18.11. SAR Airlines.

11.18.11.1. Airlines will be no longer than specified in the manufacturer’s literature, but may not exceed the NIOSH-approved length of 91.4 meters (300 feet) unless specific approval has been obtained from the BEE.

11.18.11.2. Inspect airlines for flexibility and cracking. Ensure there are no restrictions or leaks that would prevent the free discharge of air from the hose outlet. Airline couplings must not be compatible with outlets of other gas systems to prevent the inadvertent servicing of supplied-air respirators with other gases or oxygen.

11.18.11.3. Replace failed components with an identical item (same manufacturing and part number) or the approval is voided.

11.18.11.4. Airlines for supplied-air respirators have a limited life and must be impermeable to fuel (acid-proof rubber). Consult the manufacturer for the life expectancy of hoses used by the base.

11.18.11.5. Discard airlines showing signs of stiffness or cracking.

11.18.12. Communications equipment must be compatible with approved respiratory protective equipment. Provide and use an approved communication system when the tank entry attendant cannot maintain continuous visual observation. Select electronic devices with caution. Ensure they comply with requirements for permissibility and are intrinsically safe for Class 1, Division 1, Group C and D, and comply with NEC Article 504, *Intrinsically Safe Systems*. See AFOSH Std 48-137, Attachment 7.

11.18.13. A fuel-resistant safety harness will be provided for each person working inside the tank, plus one for each emergency rescue person. Inspect safety harnesses before use, and at least semi-annually, to ensure the maximum usage does not exceed ten years from the date on the harness. If there is no date on the harness, mark the harness with an identifying symbol and record this information, with the date of manufacture, digitally or in a logbook. Also inspect for the following:

11.18.13.1. Loose or missing rivets or stitching.

11.18.13.2. Open holes, tears, or deep cuts.

11.18.13.3. Broken, cracked, or deformed D-rings, snap-hooks, plates, or buckles.

11.18.13.4. Bent, broken, or missing snap-hook keeper latch.

11.18.13.5. Render unserviceable harnesses useless by cutting across webbing on straps.

11.18.14. Select personal fall-arrest systems (safety harnesses, lanyards, lifelines, straps) to match the work situation. Minimize the possible free-fall distance. Consider the particular work environment to be encountered; for example:

11.18.14.1. Acids, dirt, moisture, oil, grease, or other substances can cause deterioration of the fall-arrest system's ability to function properly.

11.18.14.2. Do not use wire rope or rope-covered wire lanyards and some plastics such as nylon where there is an electrical hazard.

11.18.14.3. Do not use lanyards constructed of rope or synthetic materials or rope-covered lanyards when performing welding or cutting operations, or in areas where sharp edges, open flames, or excessive heat could present a hazard.

11.18.14.4. When lanyards, connectors, or lifelines are subject to damage by work operations such as welding, chemical cleaning, or sandblasting, protect the component or provide other securing systems.

11.18.14.5. Keep lanyards as short as reasonably possible to reduce the length of a free-fall. Never permit a vertical fall of more than 1.8 meters, nor contact with the lower level. Attach lanyards to a drop-line, lifeline, or fixed anchor point by a means that will not reduce its required strength.

11.18.14.6. With all fall-arrest systems, use an energy (shock) absorber component whose primary function is to dissipate energy and limit the deceleration forces that the system imposes on the body during fall-arrest. These devices may use various principles, such as deformation, friction,

tearing of materials, or breaking of stitches to allow energy absorption. An energy absorber may be borne by the user or be a part of a horizontal or vertical lifeline subsystem.

11.18.14.7. Destroy all lanyards that have been subject to impact loading from a falling person or weight test.

11.18.14.8. Fall protection and rescue equipment may be locally or centrally procured. Purchase equipment to meet or exceed the requirements of ANSI Z359, *Safety Requirements for Personal Fall Arrest Systems, Subsystems, and Components.* Use only commercially manufactured fall and rescue equipment. The use of "homemade" or modified equipment is strictly prohibited.

11.18.14.9. Equipment purchased will have the manufacturer's name, identification code, and the date of manufacture stamped on the equipment or on a permanently attached tag.

11.18.14.10. The free end of synthetic materials lanyards will be lightly seared and, in the case of natural fiber rope, will be seized (whipped).

11.18.14.11. Supervisors must maintain the manufacturer's performance testing information for the personal fall-arrest system being used. The fall-arrest system must meet test requirements of 29 CFR 1926 Sub-Part M, *Fall Protection.*

11.18.14.12. It is common practice to interchange lanyards, connectors, lifelines, deceleration devices, and body harnesses since some components wear out sooner than others; however, not all components are designed to be interchangeable. For example, a lanyard should never be substituted for the lifeline.

11.18.14.13. Provide safety training before personnel use a fall-arrest system for the first time. Include application limits, proper anchoring and tie-off techniques, estimation of free-fall distance (including deceleration distance), total fall distance to prevent striking a lower level, methods of use, inspection, storage, and manufacturer's recommendations.

11.18.14.14. When personal fall-arrest systems are used, the supervisor must ensure that workers can be properly rescued or can rescue themselves should a fall occur. Consider the availability of rescue personnel, ladders, or other rescue equipment before working in areas that require a fall-arrest system.

11.18.15. Inspecting Personal Fall-Arrest Systems.

11.18.15.1. Once a fall-arrest system is in use, its effectiveness should be monitored to determine cleaning and maintenance requirements.

11.18.15.2. Comply with T.O. 00-25-245, *OPR Instruction Testing and Inspection Procedures Personnel Safety and Rescue Equipment*, and all manufacturer instructions regarding the inspection, maintenance, cleaning, and storage of the equipment. The using organization will maintain copies of the manufacturer's instructions.

11.18.15.3. The user must inspect equipment before each use. Inspect all fall-arrest systems at least annually using the criteria in T.O. 00-25-245. Conduct more frequent inspections at the discretion of the using organization.

11.18.15.4. When inspection of equipment reveals defects, damage, or inadequate maintenance, tag the equipment as "unserviceable" and remove it from service until repairs are made. The following conditions require a component to be removed from service:

11.18.15.4.1. Components with absent or illegible markings.

11.18.15.4.2. Absence of any elements affecting the equipment form, fit, or function.

11.18.15.4.3. Evidence of defective or damaged hardware elements, including distorted hooks or faulty hook springs, tongues unfitted to shoulder buckles, loose or damaged mountings, non-functioning parts, cracks, sharp edges, deformation, corrosion, chemical attack, excessive heating, alteration, deterioration, contact with acids or other corrosives, and excessive wear.

11.18.15.4.4. Evidence of defective or damaged straps or ropes, including fraying, splicing, unlaying, kinking, knotting, roping, broken or pulled stitches, excessive elongation, chemical attack, excessive soiling, cuts, tears, abrasion, mold, undue stretching, alteration, needed or excessive lubrication, excessive aging, contact with fire or other corrosives, internal or external deterioration, and excessive wear.

11.18.15.4.5. Alterations or additions that may affect efficiency, absence of parts, or evidence of defects.

11.18.15.4.6. Damage to or improper function of mechanical devices and connectors.

11.18.16. Maintenance and Storage Requirements.

11.18.16.1. The user organization maintains and stores equipment according to the manufacturer's instructions. Contact the manufacturer about unique issues that may arise due to conditions of use. Retain the manufacturer's instructions for reference.

11.18.16.2. Tag equipment in need of scheduled maintenance as "unserviceable" and immediately remove from service.

11.18.16.3. Protect equipment from environmental damage caused by heat, light, excessive moisture, oil, chemicals and their vapors, or other degrading elements.

11.18.16.4. Respirators will be cleaned and sanitized at the end of each day in which the respirator was used, and will also be cleaned and sanitized before being worn by a different individual. See AFOSH Std 48-137, Attachment 14, for cleaning procedures.

11.18.16.5. Use AF Form 1071, **Inspection/Maintenance Record**, to record the inspection and maintenance of SCBA equipment. See AFOSH Std 48-137, Attachment 14, for instructions.

# Chapter 12

# CONTRACT WORK

**12.1. General Information.** This chapter outlines LFM responsibilities for contract work on fueling systems, especially tank cleaning and other maintenance and repair. Such operations, although primarily the responsibility of the contractor, require that base contracting and contract management be a coordinated team effort to ensure work is done safely and fuel quality is maintained.

**12.2. Contract Requirements.** Liquid fuel systems are different than mechanical systems. The inexperienced tend to consider these systems the same as plumbing or industrial piping. The result could be a project that may superbly handle water but is a failure, sometimes dangerous, handling fuel. Fuel unloading facilities tend to fit this category where air and vapor problems cause pump cavitation and explosive mixture problems in poorly designed systems. LFM has a special responsibility to ensure base programmers and designers are aware of the need to hire specialists to design fuels projects. Additionally, it is important to impress on leadership the need to establish contractor qualifications before the contract award, and for LFM to provide active contract surveillance in support of contract management. Fuel systems are too mission-essential and potentially too dangerous to be left to chance.

12.2.1. Responsibility for contract work starts with identification of the need and submitting the request. The request should identify in detail the scope of work and thoroughly justify the need. This helps programmers justify the project to the DESC. DESC thoroughly screens each project, so ensure that the essential minimum is requested or the project will be disapproved. Periodically follow-up on your request. Since base funding is not required, the installation facility board only approves the concept. Do not let your project be held back by the facility board due to lack of funds. Once the project is received by DESC from the MAJCOM, it may be tracked on the DESC Web site (https://fuelsweb.desc.dla.mil/locks.asp).

12.2.2. DESC pays for the design. Except for minor work, insist on a fuel system expert to design the project. Be involved in all design-related meetings and reviews. Information on available open-end A-E design contracts is available from the AFCESA Web page (http://www.afcesa.af.mil/Directorate/CES/Mechanical/POL/FuelsContracts.htm).

12.2.3. The invitation for bids for contracts such as tank cleaning, coating, or welding, must require the contractor to submit evidence the firm is qualified to perform such work. The firm must provide:

12.2.3.1. A narrative explaining why the firm is qualified, along with specific references.

12.2.3.2. Examples of three similar projects completed by the firm over the past five years. Include the scope of work, applicable size of tanks, pipes, system capacity, customer's name (company and owner), and a point of contact.

12.2.3.3. Certification that the contract supervisor is thoroughly familiar with the fuel characteristics, worker safety requirements, and related OSHA requirements.

12.2.3.4. Names and qualifications of each contractor's representative who will be in charge of the work and be present at the job site when work is being done.

**12.3. TES.** The LFM TES, working with contract management and the contracting officer, provides overall coordination of the project. TES responsibilities are:

12.3.1. Advise the contractor, through pre-work meetings with the contracting office, of known potential hazards within the tank and the surrounding area.

12.3.2. Provide contract surveillance in all technical matters pertaining to the work. Immediately advise the contract inspector of noncompliance with safety or environmental requirements.

12.3.3. Inspect the contractor's equipment to ensure it is in working order and meets all applicable regulations.

**12.4. Air Force Forms Prescribed**. AF Form 172, **Tank Inspection Summary**.

## Attachment 1

## GLOSSARY OF REFERENCES AND SUPPORTING INFORMATION

***References***

Air Force Policy Directive (AFPD) 32-10, *Installations and Facilities*

Air Force Instruction (AFI) 23-201, *Fuels Management*

AFI 32-1001, *Operations Management*

AFI 32-1054, *Corrosion Control*

AFI 32-1065, *Grounding Systems*

Air Force Pamphlet (AFPAM) 32-1004, Volume 2, *Working in the Operations Flight - Maintenance Engineering*

Air Force Engineering Technical Letter (ETL) 01-15, *Programming Fuels Projects*

Air Force Audit Agency (AFAA) Audit Report 96061023, *Funding for Fuel Facilities Maintenance and Repair*

Air Force Occupational Safety and Health (AFOSH) Standard (Std) 48-8, *Controlling Exposure to Hazardous Material*

AFOSH Std 48-137, *Respiratory Protection Program*

AFOSH Std 91-5, *Cutting and Brazing*

AFOSH Std 91-25, *Confined Spaces*

AFOSH Std 91-32, *Emergency Shower and Eyewash Units*

AFOSH Std 91-31, *Personal Protective Equipment*

AFOSH Std 91-38, *Hydrocarbon Fuels, General*

AFOSH Std 91-56, *Fire Protection and Prevention*

Technical Order (T.O.) 00-25-172, *Ground Servicing of Aircraft and Static Grounding/Bonding*

T.O. 00-25-245, *OPR Instruction Testing and Inspection Procedures Personal Safety and Rescue Equipment*

T.O. 37-1-1, *General Operation and Inspection of Installed Fuel Storage and Dispensing Systems*

T.O. 42B-1-1, *Quality Control of Fuels and Lubricants*

Title 29, Code of Federal Regulations (CFR), Part 1926, Subpart M, *Fall Protection*, current edition

Unified Facilities Criteria (UFC) 3-570-06, *Operation and Maintenance: Cathodic Protection Systems*

40 CFR 280, *Technical Standards and Corrective Action Requirements for Owners and Operators of Underground Storage Tanks*

49 CFR 195, *Transportation of Hazardous Liquids by Pipeline*

Military Standard (MIL-STD) 161, *Identification Methods for Bulk Petroleum*

MIL-STD-161F2, *Identification Methods for Bulk Petroleum Products Systems Including Hydrocarbon Missile Fuels*

Military Handbook (MIL-HDBK) 201B(1), *Petroleum Operations*, October 1, 1992

MIL-HDBK-1022A, *Petroleum Fuel Facilities*, November 1, 1999

American National Standards Institute (ANSI) Z359, *Safety Requirements for Personal Fall Arrest Systems, Subsystems and Components*

American Society of Mechanical Engineers (ASME) B31.3, *Process Piping*

ASME B31.4, *Liquid Transportation Systems for Hydrocarbons, Liquid Petroleum Gas, Anhydrous Ammonia, and Alcohols*

ASME *Boiler and Pressure Vessel Code*, Section IX

American Petroleum Institute (API) Bulletin 1529, *Aviation Fueling Hoses*

API Publication (Pub) 1581, *Specifications and Qualification Procedures for Aviation Jet Fuel Filter/Separators*

API Pub 2026, *Safe Access/Egress Involving Floating Roofs of Storage Tanks in Petroleum Service*

API 570, *Piping Inspection Code: Inspection, Repair, Alteration, and Rerating of In-Service Piping Systems*

API Recommended Practice (RP) 1004, *Bottom Loading and Vapor Recovery for MC-306 Tank Motor Vehicles*

API RP 1102, *Steel Pipelines Crossing Railroads and Highways*

API RP 1107, *Pipeline Maintenance and Welding Practices*

API RP 1110, *Pressure Testing of Liquid Petroleum Pipelines*

API RP 1604, *Closure of Underground Petroleum Storage Tanks*

API Specification (Spec) 6D, *Pipeline Valves (Gate, Plug, Ball, and Check)*

API Standard (Std) 610, *Centrifugal Pumps for Petroleum, Heavy Duty Chemical, and Gas Industry Service*

API Std 650, *Welded Steel Tanks for Oil Storage*

API Std 653, *Tank Inspection, Repair, Alteration, and Reconstruction*

API Std 1104, *Welding of Pipelines and Related Facilities*

API Std 2015, *Safe Entry and Cleaning of Petroleum Storage Tanks, Planning and Managing Tank Entry from Decommissioning through Recommissioning*

DoD Standard Design AW 78-24-28-88-AF, *Pressurized Hydrant Fueling System Type III*

National Fire Protection Association (NFPA) 30, *Flammable and Combustible Liquids*

NFPA 30a, *Automotive and Marine Service Station Code*

NFPA 31, *Standard for the Installation of Oil Burning Equipment*

NFPA 70, National Electric Code (NEC), Article 500, *Hazardous Locations*

NFPA 70, NEC, Article 504, *Intrinsically Safe Systems*

NFPA 70, NEC, Article 515, *Using Class 1 Liquids Requirements*

NFPA 407, 2-4.9, *Standard for Aircraft Fuel Servicing*

NFPA 77, *Recommended Practice on Static Electricity*

NATO Standardization Agreement (STANAG) 3583, *Standards of Accuracy for Different Press Gauges for Aviation Fuel Filters and Filter/Separators*

Navy Guide Specification (NGS) 09971, *Coating of Steel Structures for Atmospheric Service (Navy & Air Force)*

NGS 09973, *Lining of Welded Steel Petroleum Fuel Tanks (Air Force)*

Table of Allowances (TA) 016, *Table of Allowances for Special Purpose Clothing and Personal Equipment*

Uniform Fire Code (UFC), Article 52, *Fuel Dispensing Stations*

UFC Article 79, *Flammable and Combustible Liquids*

UFC Appendix Standard A-II-F

Underwriters Laboratory (UL) 2085, *Standard for Protected Aboveground Tanks for Flammable and Combustible Liquids*

UL 58, *Steel Underground Tanks for Flammable and Combustible Liquids*

UL 142, *Steel Aboveground Tanks for Flammable and Combustible Liquids*

***Additional References***

Department of Defense (DoD) Standard Design AW 78-24-27, *Standard Fueling Systems; Aboveground Vertical Steel tanks with Floating Pan and Fixed Roofs*

DoD Standard Design AW 78-24-29, *Aircraft Direct Fueling System Type IV*

***Abbreviations and Acronyms***

**AC**—Alternating current

**AP**—Allied Publication

**A-E—**Architect-engineer

**AETC—**Air Education and Training Command

**AFAA**—Air Force Audit Agency

**AFCESA—**Air Force Civil Engineer Support Agency

**AFCMO—**Air Force Contract Management Office

**AFOSH**—Air Force Occupational Safety and Health

**AFPET**—Air Force Petroleum Office

**AFSS—**Automated fuels service station

**ANSI**—American National Standard Institute

**API**—American Petroleum Institute

**ASME—**American Society of Mechanical Engineers

**ATG—**Automatic tank gauge

**AVGAS**—Aviation gasoline

**BCE**—Base civil engineer

**BEE—**Bio-environmental engineer

**BPCV**—Back pressure control valve

**BPV**—Bypass valve

**CDHS-3**—Pressure differential control

**CE**—Civil Engineer

**CEF**—Fire Protection

**CEV—** Environmental Management

**CFR**—Code of Federal Regulations

**CONUS—**Continental United States

**CoE—**Corps of Engineers

**CPR—**Cardiopulmonary resuscitation

**CRA—**Pressure-reducing control

**CRD**—Pressure-reducing control

**CRL**—Pressure-relief control

**CSEP—**Confined space entry program

**CSPT—**Confined space program team

**CV—**Flow control

**DBB—**Double block and bleed

**D/C—**De-energize to close

**DESC—**Defense Energy Support Center

**D/FV**—Defuel/flush valve

**DLA—**Defense Logistics Agency

**DoD—**Department of Defense

**DoT—**Department of Transportation

**DP—**Differential pressure

**DPT**—Differential pressure transmitter

**E/C—**Energize to close

**E/E—**Energize to enable

**EL**—Elevation

**ESO**—Emergency shutoff

**ETL**—Engineering Technical Letter

**FAS—**Fuels accounting system

**FGS—**Final governing standards

**FMF—**Fuels management flight

**FMFC—**Fuels management flight commander

**FMO**—Fuels management office

**F/S**—Filter/separator

**FSII**—Fuel system icing inhibitor

**FSCV**—F/S control valve

**FV**—Flush valve

**gpm**—Gallons per minute

**HCV**—Hydrant control valve

**HHLA—**High high-level alarm

**HHT—**Hydrant hose truck

**HLA—**High-level alarm

**HLSO**—High-level shutoff

**HSV**—Hydrant servicing vehicle

**IPRB**—Installation Planning and Review Board

**LCP**—Lateral control pit

**LEL—**Lower explosive limit

**LFM**—Liquid fuels maintenance

**LLM—**Low-level alarm

**MAJCOM—**Major command

**MC—**Minor construction

**MCC**—Motor control center

**MILCON—**Military construction

**MOA—**Memorandum of agreement

**MOGAS—**Motor gasoline

**MRE—**Maintenance, repair, and environmental

**MSHA—**Mine Safety and Health Administration

**NATO—**North American Treaty Organization

**NAVFACENGCOM—**Naval Facilities Engineering Command

**NEC**—National Electric Code

**NFPA**—National Fire Protection Agency

**NIOSH**—National Institute for Occupational Safety and Health

**NOP**—Normal operating pressure

**NSN—**National Stock Number

**O&M—**Operation and maintenance

**OSHA**—Occupational Safety and Health Administration

**OV**—Overfill valve

**PCP**—Pump control panel

**PCV**—Pressure control valve

**PIT**—Pressure indicating transmitter

**POL**—Petroleum, oil, and lubricants

**PPCV**—Pantograph pressure control valve

**PPE—**Personal protective equipment

**psi**—Pound per square inch

**RCC—**Resource control center

**RFM—**Refueling maintenance

**RPIE**—Real property installed equipment

**RWP—**Recurring work program

**SAR—**Supplied air respirator

**SCBA—**Self-contained breathing apparatus

**SDA—**Static dissipater additive

**SEG**—Ground Safety

**SIOH—**Supervision, inspection, and overhead

**SPR—**Single-point receptacles

**TA—**Table of Allowances

**TES—**Tank entry supervisor

**UFC—**Unified Facilities Criteria

**USAFE**—United States Air Forces in Europe

**UV**—Ultraviolet

**VPI**—Valve position indicator

***Terms***

**Additives**—Chemicals added in minor proportions to a parent substance to create, enhance, or suppress a certain property or properties in the parent material.

**Automatic valve**—A fuel system component that operates hydraulically using system or pneumatic pressure.

**Barrel**—The petroleum industry uses forty-two gallons as the standard barrel.

**Benzene**—A family of colorless, flammable, and volatile components found in very small quantities in jet fuel. There are health exposure limits to benzene.

**Blanking** or **blinding**—The absolute closure of a pipe by fastening across it a solid plate or cap capable of withstanding the maximum upstream pressure.

**Booster stations (pumping stations)**—Intermediate locations along a pipeline, with storage and pumps to overcome pressure losses by boosting pressure back to the desired level.

**Bonding**—Equalizing the static electrical potential between two different components or pieces of equipment by connecting both pieces of equipment by a bonding wire.

**Booster pump**—A pump installed in a long pipeline for increasing pressure.

**Bottom loading**—Method of filling tank trucks or tank cars through a tight connection at the bottom.

**Bulk storage tank**—Storage tank for fuel typically received by pipeline, tank truck, or tank car. Fuel is transferred to other tanks (called ready-issue tanks or operating tanks) for issue to aircraft.

**Calibration**—The act of adjusting a piece of equipment. Calibrate a meter register with a given liquid volume passing through the meter or a pressure gauge with a known pressure.

**Cathodic protection**—A method for preventing corrosion of metals by electrolysis.

**Central processing unit (CPU)**—The computer or processor used as logic control for fuel systems.

**Centrifugal force**—A force that tends to impel a thing or parts of a thing outward from the center on rotation.

**Centrifugal pump**—A rotating device that moves liquids and develops liquid pressure by imparting centrifugal force.

**Closed circuit**—An electrical circuit or path that is complete. When a switch or circuit breaker is placed in the “on” position, the circuit is said to be closed.

**Coalescer**—A filter designed to cause very small drops of water to combine into larger drops (coalesce), which will separate from fuel by gravity.

**Combustible liquid**—Any liquid having a flash point at or above 38 °C (100 °F).

**Combustible vapor indicator—**A device that measures the quantity of combustible vapors in the atmosphere; also known as an explosive meter or LEL meter.

**Confined space—**A space that is large enough and configured so a worker can bodily enter and perform assigned work, has limited or restricted means for entry or exit (e.g., tanks manholes, pits, certain dikes), and is not designed for human occupancy.

**Contamination—**Adding to a petroleum product some material not usually present, such as dirt, rust, water, or another petroleum product.

**Corrosion—**An electrochemical action causing a material to revert to its natural state (i.e., steel corrodes to iron oxide [rust]).

**Cut-and-cover tanks—**Vertical storage tanks mounded over with soil. Used primarily in overseas locations for concealment and splinter protection.

**Dead head—**A term used to describe the act of pumping against a closed pipeline.

**Deadman control—**A control device, such as a valve or switch, designed to interrupt flow if the operator releases it.

**De-energized—**A term used to describe a component that has no electrical power applied to it.

**Deterioration—**Any undesirable chemical or physical change that takes place in a petroleum product while in storage or in use.

**Differential pressure (DP)—**The difference between high and low pressure. F/Ss use DP gauges to sense the condition of the filter elements.

**Differential pressure transmitter (DPT)—**A device that senses a difference in high and low pressure as created by a venturi or orifice plate, converts the differential pressure (DP) into an electrical signal, and sends the electrical signal through a wire.

**Downstream—**A term used to describe the direction of flow in a pipeline in reference to an object. Downstream is the direction the fuel is moving. Downstream of the pump would be anywhere after the pump discharge.

**Enable—**The ability of an automatic valve to open when the conditions of its components are met.

**Energized—**A term describing a component that has electrical power applied to it.

**Epoxy coating—**A coating of thermosetting resins having strong adhesion to the parent structure, toughness, and high corrosion and chemical resistance.

**Explosion proof—**Classification of electrical enclosures for use in hazardous areas designed to prevent the passage of internal arcs, sparks, or flames.

**Filter/separator (F/S)—**A fuel system component used to remove solid particles and water from the fuel.

**Flammable liquid—**Any liquid having a flash point below 38 °C (100 °F) and a vapor pressure not exceeding 40 pounds per square inch absolute at 38 °C (100 °F).

**Flash point—**The temperature at which a combustible or flammable liquid produces enough vapor to support combustion.

**Floating roof tank—**Petroleum storage tank with a roof that floats on the liquid surface, and rises and

falls with the liquid level.

**Floating pan**—A floating cover, usually of honeycomb design, which lays directly on the fuel in a petroleum storage tank used to reduce vapor emissions and provide fire protection. Older pans supported above the fuel using pontoons are not effective for fire prevention.

**Fluid**—A substance tending to flow or conform to the shape of a container. Fluid can be in a liquid or gaseous state.

**Free water**—Undissolved water content in fuel.

**Freeze point**—The temperature at which wax crystals form in distillate fuels and jet fuels.

**Friction**—The resistance to motion between two bodies in contact.

**Fuels control center (FCC)**—POL control center, usually manned twenty-four hours a day, 365 days a year.

**Galvanizing**—Zinc coating applied to iron or steel that cathodically protects it.

**Gas**—A fluid that has no particular shape or volume but tends to expand indefinitely. Will take the shape of the container it is in and can be compressed.

**Gasoline**—A volatile liquid hydrocarbon fuel generally made from petroleum.

**Grounding**—A term used to describe the equalizing of static electrical potential between a component or piece of equipment and the earth. This is done by connecting the equipment by wire to a ground rod.

**Ground rod**—A rod, typically 19 millimeters by 2.4 meters (0.75 inch by 8 feet), made of galvanized steel, and driven into the earth for grounding. Copper ground rods are not typically used around cathodic protection systems.

**Hazardous atmosphere**—An atmosphere presenting a potential for death, disablement, injury, or acute illness from one or more of the following: flammable gas, vapor, or mist in excess of 10% of its LEL or lower flammable limit (LFL); atmospheric oxygen concentration below 19.5% or above 23.5%; an atmospheric concentration of any chemical substance greater than the occupational exposure limit (OEL), which is capable of causing death, incapacitation, impairment of ability to self-rescue, injury, or acute illness due to health affects.

**Header**—A term describing a loading/offloading connection or coupler.

**Hot pit**—An aircraft direct fueling system where aircraft can be refueled while engines are still running (Type IV).

**Hydrant servicing vehicle - R-12**—Vehicle used with a Type III hydrant system to refuel aircraft.

**Hydrant system**—Distribution and dispensing system for aviation fuels, consisting of a series of fixed-flush-type outlets or hydrants connected by piping.

**Hydraulic fluid**—Fluids intended for use in hydraulic systems. Low viscosity, low rate of change of viscosity with temperature, and low pour point are desirable characteristics.

**Hydraulics**—The science of fluids or gases at rest or in motion.

**Hydrocarbons**—Any components made up exclusively of hydrogen and carbon in various ratios.

**Hydrostatic**—The science of fluids or gases at rest (see “Hydraulics”).

**Hydrostatic head**—Pressure caused by a column of fluid.

**Hydrostatic test**—A test for leaks in a piping system using liquid under pressure as the test medium.

**Jet fuel**—Fuel used in jet aircraft engines.

**JP-4**—A grade of jet fuel: vapor pressure = 2 to 3 psi; flash point = -29 °C (-20 °F); viscosity at 16 °C (60 °F) = 1.81 centistokes; freeze point = -58 °C (-72 °F); specific gravity = 0.79.

**JP-5 (NATO F-44)**—A high-quality kerosene fuel with a flash point of 60 °C (140 °F) or higher, a freeze point of -51.7 °C (-61 °F), a relative density of 48 ° to 36 ° API, and a specific gravity of 0.788 to 0.845. This fuel is primarily used by the Navy for use on carriers because of its high flash point.

**JP-8 (NATO F-34)**—A high-quality kerosene fuel with a flash point of 3.2 °C (37.8 °F) or higher, a freeze point of -47.2 °C (-52.9 °F), a relative density of 51 ° to 37 ° API, and a specific gravity of 0.775 to 0.840.

**JP-8+100 (NATO F-34+100)**—JP-8 fuel with an additive to increase fuel thermal stability by 38 °C (100 °F). It has properties that reduce carbon buildup in engines and cleans certain engines with limited buildup. It disarms conventional filter/separator (F/S) coalescers and replacements are not expected in the field until 2001.

**Kerosene**—A class of refined oil that boils between 188 and 268 °C (370 and 515 °F). It is the primary ingredient of JP-5 and JP-8.

**Lower Explosive Limit (LEL)**—Sometimes referred to as the lower flammable limit (LFL). The minimum concentration of a flammable vapor in air that will ignite if an ignition source is applied.

**Liquid fuels**—Any liquid used as fuel that can be poured or pumped.

**Liquid**—A fluid that pours easily and will take the shape of the container it fills. Liquid is almost incompressible.

**Loading**—A fuel issue connection, where fuel is loaded on refueling units.

**Lubricants**—Materials, especially oils, grease, and solids such as graphite, used to decrease friction.

**Micron**—A unit of length equal to one millionth (1/1,000,000) of a meter.

**Microprocessor unit**—The computer or processor used as logic control for fuel systems.

**Nipple**—A short length of pipe.

**Nonsparking tools**—Made of a metal alloy that which, when struck against other objects, do not usually cause sparks of sufficient temperature to ignite flammable vapors.

**Nozzle**—A spout or connection through which fuel is discharged.

**Offloading**—The process of unloading fuel by tank truck or tank car.

**Ohmmeter**—An instrument to read ohms or resistance.

**Oil/water separator**—A device used to separate mixtures of oil and water.

**Open circuit**—Incomplete electrical circuit or path. When a switch or circuit breaker is placed in the off position or a fuse is removed, it is said to be “open.”

**Operating storage tank**—Storage tank from which fuel may be issued directly to an aircraft or refueler. Also referred to as a “ready-issue tank.”

**Orifice plate—**A component used to create a differential pressure for use in controlling automatic valves.

**Panero system—**Type I fuel system. Single-outlet hydrant system.

**Pantograph—**A series of pipes, connected by swivel joints, used to connect fueling equipment to aircraft or vehicles.

**Petroleum—**A compound consisting of a mixture of hydrocarbons.

**Phillips system (constant-pressure system)—**Type III system. Constant pressure fueling system with multiple hydrants in the parking apron. Piping is arranged in a loop.

**Pontoon roof**—Floating roof for a storage tank that has liquid-tight compartments with positive buoyancy.

**Power—**A source or means of supplying energy. The time or rate at which work is done or energy is transmitted or emitted.

**Pressure—**The force exerted over a surface divided by its area.

**Pressure drop—**The loss in pressure of a liquid flowing through a piping system caused by pipe friction, fittings, velocity changes, and changes in elevation.

**Pressure indicating transmitter (PIT)—**A device used to measure pressure, convert the pressure to an electrical signal, and send the electrical signal through a wire.

**Pressure gauge—**An instrument used to measure pipeline pressure at the point where it is installed. Some gauges can read differential pressure (DP) and some can read vacuum.

**Pressure surge/spike (hydraulic shock)—**Sudden increase in fluid pressure caused by a sudden stop of flow.

**Pritchard system—**Type II fuel system. Multi-outlet hydrant system.

**Refueler—**Tank tuck used to resupply aircraft with fuel.

**Resistance—**An opposing or retarding force; the opposition offered by a body or substance to its movement.

**Sludge—**Heavy viscous oily mass found in the bottom of storage tanks; often contains rust, scale, or dirt.

**Specific gravity**—The ratio of the weight of a given volume of material at 15.5 °C (60 °F) to the weight of an equal amount of distilled water at the same temperature, both weights being corrected for the buoyancy of air.

**Stability—**Property of product that gives it the ability to retain its physical and chemical properties intact, even during extended storage.

**Static dissipater additive (SDA)—**An additive that reduces static discharge potential in the vapor space above the fuel. It reduces the time for static charges to dissipate, decreasing the potential for ignition from static charges.

**Static electricity—**An electrical charge produced by objects rubbing together, creating negative and positive electrons.

**Strapping—**Measuring storage tanks and cargo carriers for capacity.

**STANAG—**NATO standardization agreement.

**Sump—**A low area or depression that receives drainage.

**Thief**—Sampling apparatus that gets liquid samples within 13 millimeters (0.5 inch) of the bottom of a tank.

**Type I hydrant system—**See "Panero system."

**Type II hydrant system—**See "Pritchard system."

**Type III hydrant system—**See "Phillips system."

**Type IV refueling system—**See "Hot pit system."

**Unloading header**—See "Offloading."

**Upper explosive limit (UEL)**—Sometimes referred to as upper flammable limit. The maximum concentration of a flammable vapor in the air that will ignite if an ignition source is applied.

**Upstream—**A term used to describe direction of flow in a pipeline. Upstream is when the flow is moving toward a component or reference point.

**Valve position indicator (VPI)—**A valve accessory that indicates its position (open or closed).

**Vapor lock—**Malfunction of a pumping system caused by vaporizing the fuel.

**Vapor pressure—**Internal pressure of vapor in a liquid, usually in psi; an indication of volatility.

**Venturi—**A tube of a smoothly shaped construction that creates differential pressure similar to an orifice plate but much more accurately.

**Viscosity**—Measure of the internal resistance of a fluid to flow or movement.

**Volatility**—Measure of the tendency of a liquid to vaporize (vapor pressure).

**Voltage—**Electrical potential or potential difference.

**Volume—**The amount of space occupied by a three-dimensional figure as measured in cubic units (e.g., inches, feet, quarts, gallons); cubic capacity.

**Water draw-off—**A valve or similar device used to remove free water from the tank bottom.

**Water slug shutoff**—Valve in the filter/separator (F/S) discharge piping which closes automatically when the water in the F/S rises above a set level.

**Weathering**—Loss of the more volatile components of a product because of evaporation.

**Weatherproof**—Electrical enclosure used for outdoor service in nonhazardous areas.

**Weight—**The force with which a body is attracted toward the Earth or a celestial body by gravitation, and is equal to the product of the mass and the local gravitational acceleration.

**Attachment 2**

## CAPACITY OF VERTICAL TANKS

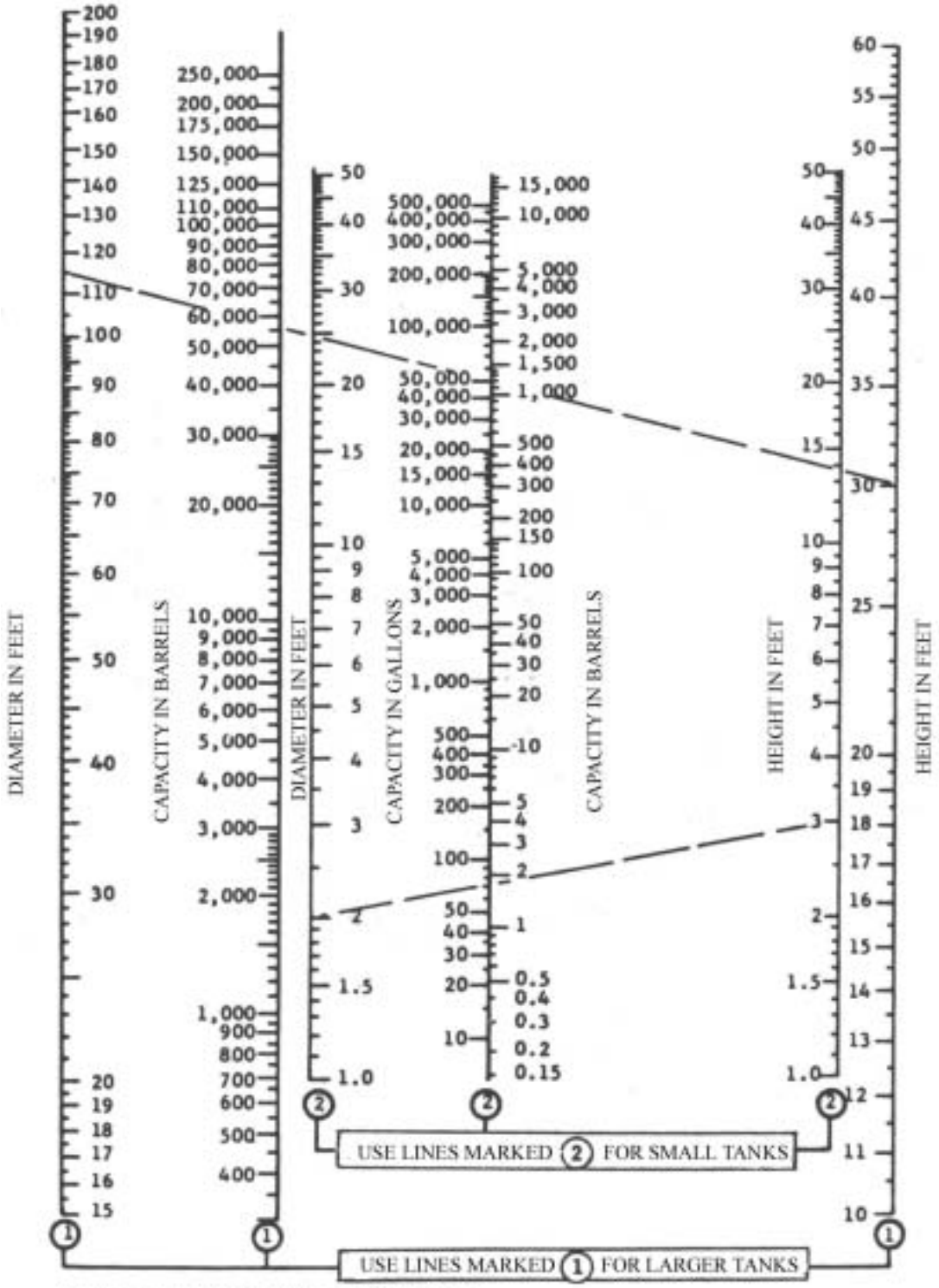


NOTE: FOR APPROXIMATE CALCULATIONS

**Attachment 3**

## TEST PROCEDURE FOR SETTING THE PRESSURE DIFFERENTIAL CONTROL (CDHS-3)

**A3.1. In General.** The CDHS-3 control operates from a DP produced by the orifice plate on the outlet of the main valve. The orifice plate bore size is on the flange of the orifice plate. Once you identify the orifice plate bore size, you can compute its DP at a given flow rate (Figure A3.1). By knowing this DP, testing becomes a matter of producing the DP across the diaphragm of the CDHS-3 control and adjusting the control until it trips. For this method you add shutoff valves in the CDHS-3 sensing lines to shut off the fuel supply, then add external pressure equal to that produced by the differential across the orifice plate and make the adjustment. Figure A3.2 shows the location of' the shutoff valves and the equipment needed for the adjustment.

**Figure A3.1. Flow Chart.**

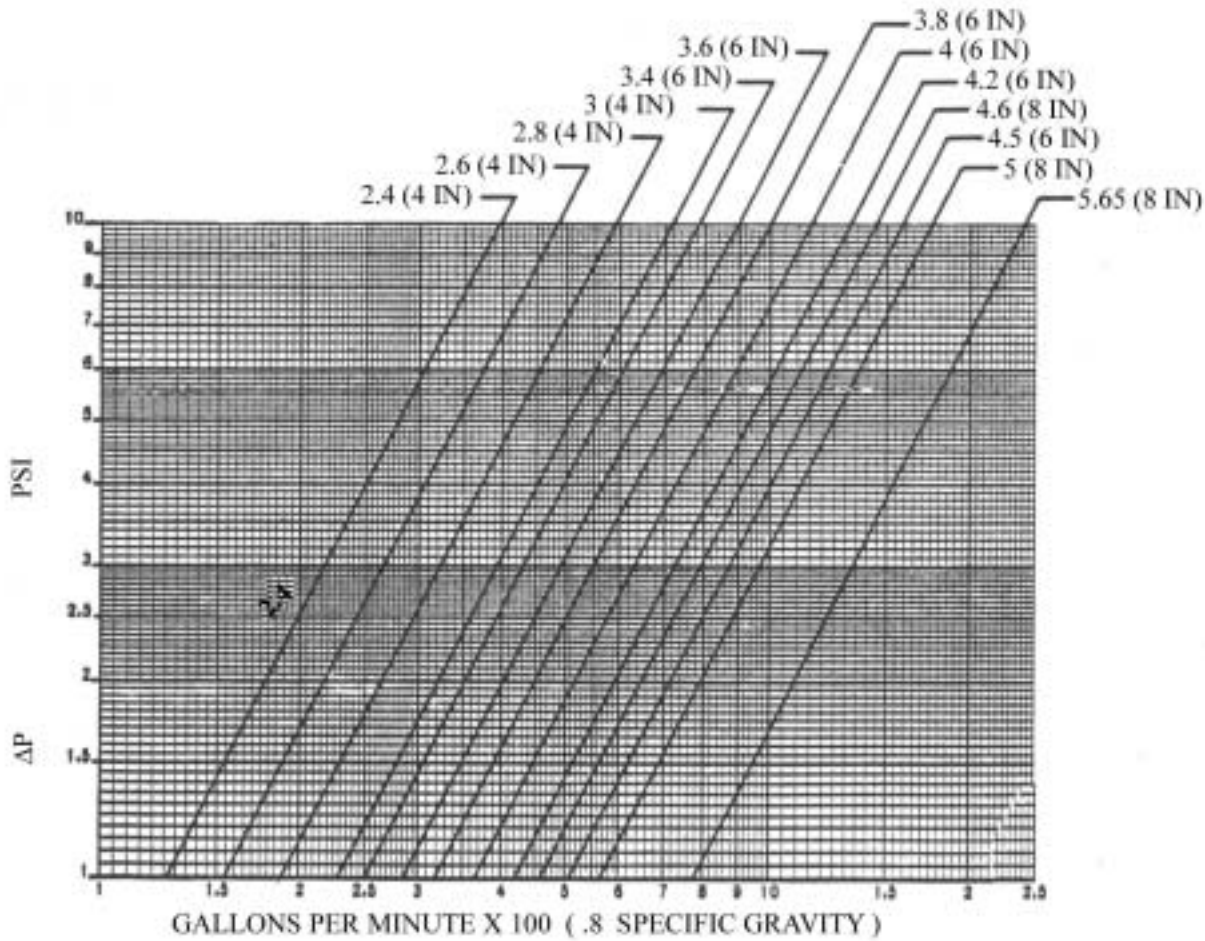

**Figure A3.2. Shutoff Valves.**

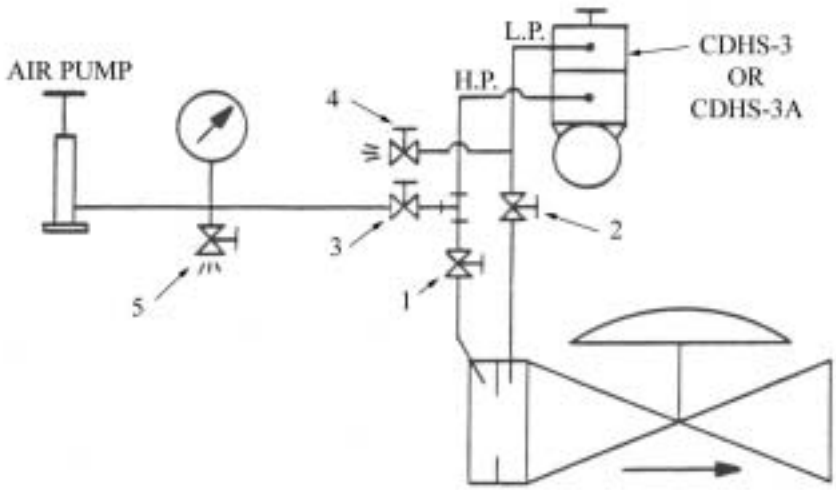


**A3.2. Installing Valves.** Shutoff valves (1 and 2) are in the high- and low-pressure sensing lines between the orifice plate and the CDHS-3. Install valve 3 on a T in the high-pressure sensing line on the CDHS-3 side of valve 1 to connect the air pump and pressure gauge. Install valve 4 on a T in the low-pressure sensing line to vent the low-pressure side of the diaphragm to the atmosphere. Now the excess flow control may be set without flowing fuel through the system.

**A3.3. Set DP.** To find the correct DP on the flow chart in Figure A3.1, move to the right across the bottom line of the chart to find the flow rate (gallons per minute) at which your system typically operates, then move vertically towards the top of the chart until the gallon-per-minute flow line intersects the line drawn from the orifice bore size. From this intersection, follow the line to the left of the chart and read the DP in psi. Use the DP figure from the chart in the following procedure:

A3.3.1. Close valves 1 and 2. Open valve 4 to vent the low-pressure side of the diaphragm to the atmosphere. Connect a 0- to 15-psi gauge and air pump to shut off valve 3. Turn the adjustment screw on the CDHS-3 clockwise until it bottoms out.

A3.3.2. Apply the pressure (psi) obtained from the flow chart to the high-pressure-sensing connection. Turn the adjustment screw on the CDHS-3 counterclockwise until the control trips. After the control trips, open valve 5 to bleed the pressure to 0 psi and reset the control. Repeat the procedure several times to make sure the control trips at the correct pressure.

A3.3.3. To return the system to normal operation, remove the air pump and gauge, close and plug off valves 3 and 4, and open valves l and 2. Remove the valve handles or safety-wire them in their proper position to prevent tampering.

## Attachment 4

## SUGGESTED VALVE TAGGING METHOD

**A4.1. Flow Direction Control Valves.** For valves operated manually by FMF personnel to control the direction of flow, use a capital "O" (for operating) followed by a number (i.e., "O-1"). **When the system is not in operation, these valves are normally open (NO) or normally closed (NC).** The complete valve designation would be "O-1-NO," or "O-2-NC."

**A4.2. Maintenance Valves.** Manually operated valves used by LFM personnel while performing maintenance are usually open, except during a test. These valves would use a capital "M" followed by a number (i.e., "M-1," "M-2").

**A4.3. Automatic Valves.** Automatic valves will be labeled "A-1," "A-2," and the like. Typical automatic valves are check, pressure relief, and automatic diaphragm types.

## Attachment 5

## PROGRAMMING FUELS PROJECTS

**A5.1. In General.** This attachment provides information to liquid fuels technicians on the basics for getting DESC funding and or support for maintenance, repair, minor construction, environmental, and MILCON projects for liquid fuel systems. More details are in Engineering Technical Letter (ETL) 01-15, *Programming Fuels Projects*. It is essential that LFM experts provide project programmers the information needed to justify the work so the project can compete for scarce funding.

**A5.2. BCE Responsibility**. Fueling systems belong to the installation and the BCE is responsible for them. This includes the day-to-day operation, environmental compliance, project programming (in-house and by contract), and developing the MILCON.

**A5.3. DESC Funding.** DESC owns the fuel on base to the point of issue. As a result, they fund system MRE contracts, as well as minor construction. Funding comes from a surcharge placed on each gallon of fuel issued. DESC and the DLA also manage the fuels MILCON and advocate for Congressional funding.

**A5.4. Funding for Facilities.** DESC only funds for fixed, permanent facilities (contingency facilities typically are not included) including:

A5.4.1. Aircraft fuel storage.

A5.4.2. Distribution and dispensing systems.

A5.4.3. Related facilities such as POL operations buildings, security fences, and access roads.

A5.4.4. Bulk MOGAS and diesel facilities (under limited circumstances).

**A5.5. DLA Requirements.** The facilities in paragraph A5.4 must directly support the DESC bulk petroleum management mission and satisfy at least one of the following criteria:

A5.5.1. Stores or distributes DESC product.

A5.5.2. Ensures environmental compliance.

A5.5.3. Protects DESC product from loss or contamination.

A5.5.4. Economically beneficial to DESC.

A5.5.5. Directed by DESC.

A5.5.6. Needed to meet minimum inventory level requirements.

**A5.6. DESC Ownership.** Contact the installation fuels office for verification of DESC ownership. Although these projects can be funded from either Air Force or DESC resources, scarce Air Force funding dictates the DESC option. See the Air Force Audit Agency (AFAA) report of audit 96061023, *Funding for Fuel Facilities Maintenance and Repair*.

**A5.7. Programming Areas.** Programming will be in three areas:

A5.7.1. MILCON.

A5.7.2. MRE (equivalent to O&M funds) projects by contract.

A5.7.3. Recurring environmental costs.

**A5.8. Minor Construction (MC).** MC work is done as part of MRE. MC exceeding $100,000 is considered capital investment, and DLA limits funds for this work.

**A5.9. Military Construction Project Data**. BCE programmers must submit a DD Form 1391 for any project. Because DESC must approve projects for installations and missions unfamiliar to them, the form must explain the project and the need with enough detail for DESC to understand the project and agree to fund it. Where there are obvious, less expensive options, explain why they were not used. MC projects should have an economic analysis attached when there may be options. For any project, provide the following:

A5.9.1. Full description of the required work.

A5.9.2. Listing of DESC fuel products (type of fuel and tank or facility number). If this is missing, the project will be returned without action.

A5.9.3. Thorough explanation of the need for the project.

A5.9.4. Detailed cost estimate (no lump sums). Provide realistic units of measure (e.g., meters, feet, square meters, square feet, liters, gallons).

A5.9.5. Cost-benefit analysis for construction projects over $2 million, or when a more expensive construction option is selected.

**A5.10. MRE Projects.** For MRE projects, include A-E design costs and added supervision, inspection, and overhead (SIOH) for outside management of the design contract by Naval Facilities Engineering Command (NAVFACENGCOM), the U.S. Army Corps of Engineers (CoE), or others, if applicable.

**A5.11. DESC Project Calls.** Project submissions are made by the installation to the MAJCOM or CINC, depending on installation location. Request only the minimum project scope to do the job. DESC realizes the services can program projects without the compromise needed when funds are constrained; as a result, DESC looks for instances of gold plating. You are dealing with experts, so do not try to fool them. Be consistent when working with DESC, as credibility pays. Local policy may require facility board approval for project validation, but approval is not needed for funds allocation since funding is from DESC.

A5.11.1. The date of the MILCON project call varies, but will typically be in June (five years ahead of the MILCON program year) with the DESC Installation Planning and Review Board (IPRB) (project prioritization) planned for December. Provide a DD Form 1391 with a cost estimate that outlines specific components to be included in the project. The call letter identifies criteria applied

by a computerized expert choice system, used to rank projects at the IPRB. In general, this ranking is followed when projects are prioritized. If the project is to succeed, the DD Form 1391 must specifically address the ranking criteria provided with the letter. MILCON projects placed in the funded category by the IPRB will require extensive additional documentation. Installations have until January of the fiscal year following the IPRB to submit an updated DD Form 1391, facility study, economic analysis, detailed cost estimate, assessment of potential environmental impact, site approval, and backup documentation. Some MAJCOMs perform this work using A-E services.

A5.11.2. DESC issues calls for MRE project documentation in October for the next two fiscal years. Submissions are due in the December/January time frame. Provide DD Forms 1391, cost estimates, and other supporting information for the next fiscal year and a line-item list of projects for the year after. Usually, out-of-cycle submissions are limited to emergencies.

A5.11.3. The MRE project call includes a requirement to project recurring environmental costs for the next fiscal year and submit them to DESC-FQ. Required information includes the cost of bottom water removal, related costs of the spill prevention and countermeasures plan, equipment testing to meet environmental requirements, laboratory tests, permits and fees. This call is frequently overlooked and military bases lose out on this substantial funding support.

**Attachment 6**

**TANK IN-SERVICE INSPECTION CHECKLIST**

**Check off each item when completed.**

| ITEM | | COMMENTS |
|---|---|---|
| **FOUNDATION** | | |
| **Concrete Ring** | | |
| 1. Inspect for broken concrete, spalling, and cracks, particularly under backup bars used in butt-welded annular rings under the shell. | ☐ | |
| 2. Inspect drain openings in ring, back of water-drawn basins, and top surface of ring for bottom leakage. | ☐ | |
| 3. Inspect for cavities under foundation and vegetation against tank bottom. | ☐ | |
| 4. Check for settlement around perimeter of tank. | ☐ | |
| **Asphalt** | | |
| 1. Check for tank settlement into asphalt base that would direct runoff rainwater under the tank instead of away from it. | ☐ | |
| 2. Look for areas where oil leaching has exposed the rock filler, indicating a hydrocarbon leak. | ☐ | |
| **Oiled Dirt or Sand** | | |
| Check for settlement into the base that would direct runoff rainwater under the tank instead of away from it. | ☐ | |
| **Rock** | | |
| The presence of crushed rock under the steel bottom usually results in severe underside corrosion. Make a note for additional bottom plate examination (ultrasonic, hammer testing, or turning of coupons) when the tank is out of service. | ☐ | |
| **Site Drainage** | | |
| 1. Check site for drainage away from the tank and associated piping and manifolds. | ☐ | |
| 2. Check operating condition of the pipe drains. | ☐ | |
| **Housekeeping** | | |
| Inspect the area for buildup of trash, vegetation, and other inflammables. | ☐ | |

| | | |
|---|---|---|
| **SHELLS** | | |
| **External Visual Inspection** | | |
| 1. Visually inspect for paint failure, pitting, and corrosion. | ☐ | |
| 2. Inspect the bottom-to-foundation seal (if applicable) | ☐ | |
| **Internal (Floating Roof Tank)** | | |
| Visually inspect for grooving, corrosion, pitting, and coating failure. | ☐ | |
| **Wind Girder (Floating Roof Tank)** | | |
| 1. Inspect wind girder and handrail for corrosion damage (paint failure, pitting, and corrosion product buildup - especially where it occurs at tack-welded junctions) and broken welds. | ☐ | |
| 2. Check support welds to the shell for pitting, especially on shell plates. | ☐ | |
| 3. Note whether supports have reinforcing pads welded to the shell. | ☐ | |
| **SHELL APPURTENANCES** | | |
| **Manways and Nozzles** | | |
| 1. Inspect for cracks or leaks on weld joints at nozzles, manways, and reinforcing plates. | ☐ | |
| 2. Inspect for shell plate dimpling around nozzles caused by excessive pipe deflection. | ☐ | |
| 3. Inspect for flange leaks and leaks around bolts. | ☐ | |
| 4. Inspect insulation seal around manways and nozzles. | ☐ | |
| **Tank Piping Manifolds** | | |
| 1. Inspect manifold piping, flanges, and valves for leaks. | ☐ | |
| 2. Inspect firefighting system components. | ☐ | |
| 3. Check for anchored piping that would be hazardous to the tank shell or bottom connections during earth movement. | ☐ | |
| 4. Check for adequate thermal pressure relief of piping to the tank. | ☐ | |
| 5. Check regulator operation for tanks with purge gas systems. | ☐ | |
| 6. Check sample connections for leaks and proper valve operation. | ☐ | |
| 7. Check temperature indicators for damage and test their accuracy. | ☐ | |

| | | |
|---|---|---|
| 8. Check welds on shell-mounted davit clips above 152-mm (6-in) and larger valves. | ☐ | |
| **Autogauge System** | | |
| 1. Inspect autogauge tape guide and lower sheave housing (floating swings) for leaks. | ☐ | |
| 2. Inspect autogauge head for damage. | ☐ | |
| 3. Bump the checker on the autogauge head for proper movement of the tape. | ☐ | |
| 4. Ask the operator if the tape tends to hang up during tank roof movement (floating roof tanks). | ☐ | |
| 5. Compare actual product level to the autogauge reading (maximum allowable variation is 51 mm [2 in]). | ☐ | |
| 6. On floating roof tanks, when the roof is in the lowest position, check that no more than 0.6 m (2 ft) of tape are exposed at the end of the tape guide. | ☐ | |
| 7. Inspect the condition of board and legibility of board-type autogauges. | ☐ | |
| 8. Test freedom of movement of marker and float. | ☐ | |
| **Shell-Mounted Sample Station** | | |
| 1. Inspect sample lines for valve function and line plugging, including return-to-tank line drain. | ☐ | |
| 2. Check circulation pump for leaks and operating problems. | ☐ | |
| 3. Test bracing and supports for sample lines and equipment. | ☐ | |
| **ROOFS**<br>**Deck Plate External Corrosion** | | |
| Inspect roof deck for paint failure, holes, pitting, and corrosion product. | | |
| **Roof Deck Drainage** | | |
| Look for evidence of standing water. (Significant sagging of fixed-roof deck shows potential rafter failure. Large standing water areas on a floating roof show inadequate drainage design, or, if to one side, a non-level roof with possible leaking pontoons.) | ☐ | |
| **Roof Insulation** | | |
| 1. Inspect for cracks or leaks in the insulation weather coat where runoff water could penetrate the insulation. | ☐ | |
| 2. Inspect for wet insulation under the weather coat. | ☐ | |

| | | |
|---|---|---|
| 3. Remove small test sections of insulation and check roof deck for corrosion and holes near the edge of the insulated area. | ☐ | |
| **ROOF APPURTENANCES** | | |
| **Sample Hatch** | | |
| 1. Inspect condition and functioning of sample hatch cover. | ☐ | |
| 2. On tanks governed by Air Quality Monitoring District rules, check the condition of the inside hatch cover seal. | ☐ | |
| 3. Check thief and hatch gauge cover for corrosion and plugging. | ☐ | |
| 4. Where a sample hatch is used to reel gauge stock level, check for marker and tab stating hold-off distance. | ☐ | |
| 5. Check reinforcing pad where sample hatch pipe penetrates the roof deck. | ☐ | |
| 6. On floating roof sample hatch and recoil systems, inspect operation of recoil reel and condition of rope. | ☐ | |
| 7. Test system operation. | ☐ | |
| **Gauge Well** | | |
| 1. Inspect visible portion of the gauge well for thinning, size of slots, and cover condition. | ☐ | |
| 2. Check for hold-off distance marker and tab with hold-off distance (legible). | ☐ | |
| 3. On floating roofs, inspect condition of roof guide for gauge well, particularly the condition of the rollers for grooving. | ☐ | |
| 4. If accessible, check the distance from the gauge well pipe to the tank shell at different levels. | ☐ | |
| 5. If tank has a gauge well washer, check valve for leaks and for presence of a bull plug or blind flange. | ☐ | |
| **Fixed Roof Scaffold Support** | | |
| Inspect scaffold support for corrosion, wear, and structural soundness. | ☐ | |
| **Autogauge – Inspection Hatch and Guides (Fixed Roof)** | | |
| 1. Check the hatch for corrosion and missing bolts. | ☐ | |
| 2. Look for wire anchor corrosion on the tape guide and float guide. | ☐ | |
| **Autogauge – Float Well Cover** | | |
| 1. Inspect for corrosion. | ☐ | |

| | | |
|---|---|---|
| 2. Check tape cable for wear or fraying caused by rubbing on the cover. | ☐ | |
| **Sample Hatch (Internal Floating Roof)** | | |
| 1. Check overall condition. | ☐ | |
| 2. If equipped with a fabric seal, check for automatic sealing after sampling. | ☐ | |
| 3. If equipped with a recoil reel opening device, check for proper operation. | ☐ | |
| **Roof-Mounted Vents (Internal Floating Roof)** | | |
| Check condition of screens, locking pins, and pivot pins. | ☐ | |
| **Gauging Platform Drip Ring** | | |
| On fixed-roof tanks with drip rings under the gauging platform or sampling area, inspect drain return to the tank for plugs. | ☐ | |
| **Emergency Roof Drains** | | |
| Inspect vapor plugs for emergency drain; ensure that seal fabric discs are slightly smaller than the interior diameter of the pipe, and that fabric seal is above the liquid level. | ☐ | |
| **Removable Roof Leg Racks** | | |
| Check for racks on roof. | ☐ | |
| **Vacuum Breakers** | | |
| Record size, number, and type of vacuum breakers. Inspect vacuum breakers; if high legs are set, check for setting of mechanical breaker in high-leg position. | ☐ | |
| **Rim Vents** | | |
| 1. Check condition of the screen on the rim vent cover. | ☐ | |
| 2. Check for plating off or removal of rim vents where jurisdictional rules do not permit removal. | ☐ | |
| **Pontoon Inspection Hatches** | | |
| 1. Open pontoon inspection hatch covers and check inside for pontoon leakage. | ☐ | |
| 2. Test for explosive gas (an indicator of vapor space leaks). | ☐ | |

Checklist derived from API Standard 653, *Tank Inspection, Repair, Alteration, and Reconstruction*

## Attachment 7

## RELATED NATO STANAGs/APs/STUDIES
## PETROLEUM HANDLING EQUIPMENT WORKING GROUP RESPONSIBILITY

**Table A7.1. STANAG/AP/Study Responsibility.**

| STANAG/AP/Study | Title | Custodian |
|---|---|---|
| 2946 | Forward Area Refueling Equipment | United States |
| 3583 | Standards of Accuracy for Different Press Gauges for Aviation Fuel Filters and Filter/Separators | United Kingdom |
| 3609 | Standards for Maintenance of Fixed Aviation Fuel Receipt, Storing, and Dispensing Systems | United States |
| 3681 | Criteria for Pressure Fueling/Defueling of Aircraft | United States |
| 3682 | Electrostatic Safety Connection Procedures for Liquid Fuel Loading/Unloading During Ground Transfer | Germany |
| 3756 | Facilities and Equipment for Receipt and Delivery of Liquid Fuels | United Kingdom |
| 3784 | Technical Guidance for the Design and Construction of Aviation and Ground Fuel Installations on NATO Airfields | United States |
| 3887 | Trial Reports and Design Criteria for In-Shelter Fueling and Damage Repair (AFLP-03) | United States |
| 3967 | Design and Performance Requirements for Aviation Fuel Filter/Separator Vessels and Coalescer and Separator Elements | United States |
| 7011 | Automated Fuel System Monitoring and Control Equipment | United States |
| 7013 | Aircraft Fueling Hazard Zones | United Kingdom |
| 7029 | Characteristics of Aircraft Fueling Hoses and Couplings | Germany |
| 7071 | Design and Performance Criteria for Aviation Fuel Additive Injection Equipment | United Kingdom |
| 7102 | Environmental Protection Requirements for Petroleum Handling Facilities and Equipment | United States |