PUBLIC WORKS TECHNICAL BULLETIN 420-49-29
2 DECEMBER 1999

OPERATION AND MAINTENANCE OF CATHODIC PROTECTION SYSTEMS

Public Works Technical Bulletins are published by the U.S. Army Center for Public Works, Alexandria, VA. They are intended to provide information on specific topics in areas of Facilities Engineering and Public Works. They are not intended to establish new DA policy.

DEPARTMENT OF THE ARMY
U.S. Army Corps of Engineers Installation Support Division
7701 Telegraph Road
Alexandria, VA 22315-3862

Public Works Technical Bulletin 2 December 1999
No. 420-49-29

FACILITIES ENGINEERING
Utilities

OPERATION AND MAINTENANCE OF CATHODIC PROTECTION SYSTEMS

1. Purpose. This Public Works Technical Bulletin (PWTB) transmits the document; Operation and Maintenance of Cathodic Protection Systems.

2. Applicability. This PWTB applies to all U.S. Army Public Works activities.

3. Reference. Army Regulation 420-49, Facilities Engineering, Utility Services, April 1997.

4. Discussion. Many installations face problems with corrosion of underground storage tanks and associated piping, water storage tanks, gas lines, domestic water distribution piping and hot water distribution systems. As a result system life, reliability, efficiency, and safety are reduced. Many of these corrosion problems are preventable through proper installation, maintenance and operation of cathodic protection systems. This PWTB and associated manual provide guidance to assist installation personnel responsible for operating cathodic protection systems.

5. Point of contact. Questions and/or comments regarding this subject, which cannot be resolved at the installation level, should be directed to:

U.S. Army Corps of Engineers
ATTN: CEMP-EC (Nelson Labbé)
20 Massachusetts Ave., NW
Washington, DC 20314-1000
Telephone: (202) 761-1494, DSN: 763-1494, FAX: (202) 761-4783
e-mail: nelson.c.labbe@usace.army.mil

FOR THE DIRECTOR:

FRANK J. SCHMID, P.E.
Chief, Installation Support Policy Branch

This publication may be reproduced.

MAINTENANCE AND OPERATION OF CATHODIC PROTECTION SYSTEMS

TABLE OF CONTENTS

		Paragraph	Page
CHAPTER 1.	**GENERAL CONSIDERATIONS**		
Section I.	Introduction		
	Purpose	1-1	1-1
	References	1-2	1-1
	Glossary of Terms	1-3	1-1
	Structures Subject to Corrosion	1-4	1-1
	Justification for Cathodic Protection	1-5	1-1
	Cathodic Protection Considerations	1-6	1-2
Section II.	Corrosion Fundamentals		
	Corrosion as an Electrochemical Process	1-7	1-3
Section III.	Cathodic Protection Fundamentals		
	Electrochemical Basis for Cathodic Protection	1-8	1-5
	Practical Application for Cathodic Protection	1-9	1-5
	Types of Cathodic Protection Systems	1-10	1-7
CHAPTER 2.	**CATHODIC PROTECTION SYSTEMS**		
Section I.	Galvanic Anode Systems		
	Applications	2-1	2-1
	Anode Materials	2-2	2-1
	Test Stations	2-3	2-4
	Exothermic Welding Materials	2-4	2-4
	Insulating Materials	2-5	2-4
	Wire	2-6	2-6
	Backfill	2-7	2-6
Section II.	Impressed Current Systems		
	Applications	2-8	2-7
	Anode Materials	2-9	2-8
	Rectifier Units	2-10	2-15
	Cable	2-11	2-21
	Backfill	2-12	2-21
	Cable Connections & Splices	2-13	2-22
	Test Stations	2-14	2-23
	Insulating Materials	2-15	2-24
CHAPTER 3.	**CRITERIA FOR CATHODIC PROTECTION**		
Section I.	Introduction		
	Background	3-1	3-1
	Protection Criteria	3-2	3-1
Section II.	Other Considerations		
	Failure Rate Analysis	3-3	3-3
	Non-Destruction Testing of Facility	3-4	3-3

		Paragraph	Page
	Consequences of Underprotection	3-5	3-3
	Consequences of Overprotection	3-6	3-4
CHAPTER 4.	**TEST EQUIPMENT AND FIELD MEASUREMENT**		
Section I.	General Information		
	Basic Approach	4-1	4-1
Section II.	Types of Measurements		
	Potential Measurements	4-2	4-1
	Current Measurements	4-3	4-1
	Resistance and Resistivity Measurements	4-4	4-3
Section III.	Types of Surveys		
	Pipe-to-Soil Potential Surveys	4-5	4-5
	Tank-to-Water Potential Surveys	4-6	4-6
	Undergound Tank-to-Soil Potential Surveys	4-7	4-6
	Soil Resistivity Surveys	4-8	4-7
	"Short" Locating Surveys	4-9	4-7
Section IV.	Instruments and Equipment		
	Measurement Principles and Requirements	4-10	4-8
	Ammeters	4-11	4-8
	Voltmeters	4-12	4-8
	Earth Resistivity Meter	4-13	4-9
	Pipe and Cable Locators	4-14	4-10
	Reference Cells	4-15	4-11
Section V.	Field Testing Procedures		
	General	4-16	4-11
	Structure-to-Electrolyte Potentials	4-17	4-11
	Anode-to-Electrolyte Potentials	4-18	4-12
	Anode-to-Structure Current	4-19	4-13
	Test Stations	4-20	4-13
	Soil Resistivity	4-21	4-15
	Electrical Continuity of Structures	4-22	4-15
	Electrical Isolation	4-23	4-17
	Electrical Resistance Between Structures	4-24	4-17
	Coating Conductance Tests	4-25	4-19
	Interference Tests	4-26	4-20
	Potential Measurements of Facilities Under Pavement	4-27	4-24
Section VI.	State-of-the-Art Equipment Developments		
	Elimination of IR Drop	4-28	4-25
	Computerized Data Loggers	4-29	4-28
CHAPTER 5.	**OPERATION AND MAINTENANCE OF CATHODIC PROTECTION SYSTEMS**		
Section I.	Introduction		
	General	5-1	5-1
	Required Periodic Monitoring and Maintenance	5-2	5-1
	Design Data Required for System Maintenance	5-3	5-1
Section II.	Galvanic Anode Systems		
	General	5-4	5-2
	Visual Inspections	5-5	5-2
	Electrical Measurements	5-6	5-2

		Paragraph	Page
	Frequency of Measurements	5-7	5-3
	Structure-to-Soil Potential	5-8	5-3
	Anode-to-Soil Potential	5-9	5-3
	Structure-to-Anode Current	5-10	5-3
	Galvanic Anode Replacement	5-11	5-3
	Waterside Installation for Tanks and Equipment	5-12	5-4
	Underground Anodes	5-13	5-4
	Installing Test Stations	5-14	5-6
	Protection of Anode Lead Wires	5-15	5-6
	Welding and Splicing Electric Conductors	5-16	5-6
Section III.	Impressed Current Systems		
	General	5-17	5-7
	Placing the System in Service	5-18	5-7
	Rectifier Inspections	5-19	5-11
	Output Measurements	5-20	5-11
	Component Inspections	5-21	5-12
	Potential Measurements	5-22	5-12
	Annual Meter Tests	5-23	5-13
	Troubleshooting	5-24	5-14
	Troubleshooting Procedures	5-25	5-15
	Impressed Current Anode Replacement-Underground	5-26	5-16
	Anode Replacement for Water Storage Tanks	5-27	5-17
	Other System Component Replacement	5-28	5-18
	Interference Problem Testing and Control	5-29	5-19
	Interference Bonds	5-30	5-20
	Structure-to-Earth Survey Profile	5-31	5-21
	Locating the Interference Point	5-32	5-22
	Lead Wires	5-33	5-22
	Structure-to-Soil Potential Measurements	5-34	5-22
	Sizing the Resistance Bond	5-35	5-23
	Alternate Method of Controlling Cathodic Interference	5-36	5-25
	Corrosion Coordinating Committees	5-37	5-25

CHAPTER 6. APPLICATION AND MAINTENANCE OF PROTECTIVE COATINGS

Section I.	General Information		
	Importance of Good Coating Systems	6-1	6-1
	Types of Coatings	6-2	6-2
	Coating Damage	6-3	6-2
Section II.	Coating Application		
	Handling, Storage and Construction of Coated Facilities	6-4	6-4
	Inspection	6-5	6-4
	Materials and Methods of Application	6-6	6-6
	Backfilling	6-7	6-7
Section III.	Coating Maintenance		
	Visual Inspection	6-8	6-7
	Electrical Tests	6-9	6-8
	Coating Repair Procedures	6-10	6-8

CHAPTER 7. INITIATION AND MAINTENANCE OF RECORDS

Section I. General Information

		Paragraph	Page
	Importance of Record-Keeping	7-1	7-1
	Terms	7-2	7-1
Section II.	Record-Keeping Requirements		
	System Installation Records	7-3	7-2
	Comprehensive Master Plan	7-4	7-2
	Cathodic Protection Records	7-5	7-2
	Technical Records	7-6	7-2
	Cathodic Protections	7-7	7-3
CHAPTER 8.	**REQUIRED SURVEYS AND TESTING**		
	Annual Cathodic Protection Performance Survey	8-1	8-1
	Monthly Surveys	8-2	8-3
	Rectifier Adjustments	8-3	8-3
	Cathodic Protection Communications	8-4	8-3
	Stray Current Interference	8-5	8-3
	Rectifier Area of Influence	8-6	8-3
	Groundbed Maintenance	8-7	8-4
	Deep Anode Beds	8-8	8-4
	Magnesium Anodes	8-9	8-5
	Cased Crossing Maintenance	8-10	8-5
	Test Station Maintenance	8-11	8-5
	Federal Safety Standards	8-12	8-5
	Amendments to Standards	8-13	8-5
APPENDIX A.	**REFERENCES**		
GLOSSARY			

LIST OF FIGURES

Figure Number	Title	Page
1-1	Electrochemical Cell	1-4
1-2	Corrosion Cell - Zinc to Platinum in Hydrochloric Acid	1-4
1-3	Cathodic Protection Cell	1-5
1-4	Hydraulic Analogy of Cathodic Protection	1-6
1-5	Galvanic Anode Cathodic Protection System	1-6
1-6	Impressed Current Cathodic Protection System	1-7
2-1	Comparison Between a Galvanic Cell and a Galvanic Anode System	2-1
2-2	Current/Potential Test Station	2-4
2-3	Exothermic Welding	2-4
2-4	Typical Flange Isolation Kit	2-5
2-5	Typical Dielectric Union	2-5
2-6	Typical Casing Insulators	2-5
2-7	Typical Casing End Seals	2-6
2-8	Similarity Between an Electrolytic Cell and Impressed Current C.P. System	2-8
2-9	Circuit Diagram for Most Common Commercial Rectifiers	2-8
2-10	Cast Iron Anode Construction	2-10
2-11	Tubular Anode	2-10
2-12	Platinum Anodes	2-13
2-13	Typical Mixed Metal Oxide Anodes	2-13
2-14	Conductive Polymer Anodes	2-14
2-15	Typical Transformer Rectifiers	2-15
2-16	Single-Phase Full-Wave Bridge Rectifier	2-17
2-17	Full-Wave Rectified Current	2-18
2-18	Single-Phase Center Tap Circuit	2-19
2-19	Three-Phase Bridge Circuit	2-19
2-20	Three-Phase Wye Circuit	2-19
2-21	Half-Wave Rectified Current	2-19
2-22	Constant Current Rectifier	2-20
2-23	Automatic Potential Control Rectifier	2-20
2-24	Automatic Sampling IR Drop-Free Rectifier block Diagram	2-20
2-25	Cable Splice Connections	2-23
2-26	Epoxy Mold Encapsulation Splice Kit	2-23
3-1	Structure-to-Electrolyte Potential Measurement	3-2
3-2	Failure Rate Versus Time	3-3
4-1	Structure-to-Electrolyte Potential Measurement	4-1
4-2a	Current Measurement of Magnesium Anode using Milliammeter	4-2
4-2b	Current Measurement of Magnesium Anode using Calibrated Shunt and Millivoltmeter	4-2
4-3	Measurement of Rectifier Current using Ammeter	4-3
4-4	Measurement of Rectifier Current Output using Panel Shunt and Millivoltmeter	4-3
4-5	Four Pin Soil Resistivity Measurement	4-3
4-6	Soil Box for Determination of Resistivity	4-4
4-7	Potential Profile Showing Galvanic Corrosion Activity	4-5
4-8	Ammeter Circuit	4-8
4-9	Early Voltmeter Circuit	4-9
4-10	Potentiometer-Voltmeter Circuit	4-9
4-11	Typical Digital Multimeters	4-9
4-12	Solid State Soil Resistance Meter	4-10
4-13	Inductive Type Pipe Locator and Cable	4-10
4-14	Conductive Type Pipe Locator	4-10

Figure Number	Title	Page

4-15 Cross Section of Copper Sulfate Reference Electrode 4-11
4-16 Surface (Flush) Type Potential-Current Station 4-13
4-17 Test Station Connections 4-13
4-18 Aboveground for Potential Type 1 Test Station 4-14
4-19 Aboveground for Potential Type 2 Test Station 4-14
4-20 Flush Mounted 4-14
4-21 Cased Roadway Crossing 4-14
4-22 Test Station for Continuous Collector Wire 4-15
4-23 Test Station Connections for Continuous Collector Wire 4-15
4-24 Soil Resistivity Harness for 2.5, 5, 7.5, 10, 15 and 20 Foot Depths 4-15
4-25 Continuity Testing - Potential Method 4-16
4-26 Continuity Testing - Potential Drop Method 4-16
4-27 Continuity Testing - Pipe Locator Method 4-16
4-28 Insulation Testing - Two Wire Test Station 4-17
4-29 Electronic Insulator Tester 4-17
4-30a Resistance Measurement with Bar Contact Resistance Included 4-18
4-30b Resistance Measurement with Bar Contact Resistance Not Included 4-18
4-31 Coating Conductance - Short Line Method 4-19
4-32 Coating Conductance - Long Line Method 4-20
4-33 Stray Current Field Measurement 4-21
4-34 Record Sheet for Interference Tests 4-22
4-35 Correlation Curves 4-23
4-36 Plastic Pavement Insert 4-24
4-37 Measurement of IR Drop in an Electrical Circuit 4-25
4-38 IR Drop in a Cathodic Protection System 4-25
4-39 IR Drop in Pipe-to-Soil Potential 4-26
4-40 Effect of IR Drop 4-26
4-41 Components of Potential Measurement After Current Interruption 4-26
4-42a Pipe-to-Soil Potential as Conventionally Measured 4-28
4-42b Pipe-to-Soil Potential Waveform 4-28
4-43 Waveform Analyzer/Pulse Generator System 4-28
5-1 Condenser Head Installation of 15 Pound Magnesium Anode 5-4
5-2 Details of Magnesium Rod Installation in Water Tanks 5-4
5-3 Vertical Magnesium Anode Installation..... 5-5
5-4 Horizontal Magnesium Anode Installation Where Bottom of Ditch is Rock 5-5
5-5 Bottom of Ditch Anode Installation - New Construction 5-5
5-6 Thermit™ Welder 5-7
5-7 Exothermic Weld Cap 5-7
5-8 Typical Measurement Locations for Underground Storage Tanks 5-8
5-9 Permanent Reference Electrode Installation 5-8
5-10 Current Interrupter 5-9
5-11 Current Interrupter Hook-up 5-9
5-12 Continuity Measurement Locations 5-9
5-13 AC Clamp-On Ammeter 5-11
5-14 Location of Potential Measurements 5-13
5-15 Voltage Test Sequence for Rectifier Troubleshooting 5-14
5-16 Vertical HSCBCI Anode Installation with Packaged Backfill 5-17
5-17 Horizontal HSCBCI Anode Installation 5-17
5-18 Tank Cathodic Protection System with Aluminum Anodes Suspended from Roof 5-17
5-19 Tank Cathodic Protection System with Cast Iron Anodes Suspended from Roof 5-18
5-20 Tank Cathodic Protection System with Anode Hoop Supported from Tank Wall 5-18

Figure Number	Title	Page

5-21 Cathodic Interference 5-19
5-22 Anodic Interference 5-19
5-23 Structure Potential Survey Profile 5-21
5-24 Pipe Line Current Flow Data 5-22
5-25 Pipe Data 5-22
5-26 Bond Test Station 5-22
5-27 Current Drainage Test 5-23
5-28 Control of Interference - Galvanic Anode 5-25
6-1 Proper Coating Handling 6-4
6-2 Examples of Coating Damage 6-4
6-3 Thick Film Holiday Detector 6-5
6-4 Thin Film ("Wet Sponge") Holiday Detector 6-6
6-5 Coating of Field Joints 6-8
7-1 Structure-to-Electrolyte Potential Measurements and Dielectric Testing 7-5
7-2 Test Station Data 7-6
7-3 Rectifier Data 7-7
7-4 Tank-to-Water Potential Measurements 7-8
7-5 Soil Resistivity Measurements 7-9
8-1 Underground Tank Potential Measurement Locations 8-2
8-2 Underground Tank Potential Measurement Locations-One End Under 8-2
8-3 Above Ground Tank Potential Measurement Location 8-2

LIST OF TABLES

Table Number	Title	Page
2-1	Capabilities and Consumption Rates of Galvanic Anodes	2-2
2-2	Zinc Alloy Compositions	2-2
2-3	Aluminum Alloy Composition and Performance	2-2
2-4	Wire and Cable Insulation Designations for Galvanic Anode Systems	2-6
2-5	Electrochemical Equivalents of Common Structural Metals	2-9
2-6	Cast Iron Composition	2-10
2-7	Cast Iron Anodes	2-11
2-8	Rectifier Options and Features	2-16
2-9	Wire and Cable Insulation Designations	2-21
2-10	Coke Breeze Composition	2-22
3-1	Potential Criteria for Various Standard Reference Electrodes	3-3
4-1	Corrections Factors Short Line Casing Conductance	4-20
4-2	Summary of IR Drop Correction Techniques	4-27
5-1	Voltage Sequence for Rectifier Troubleshooting	5-14
5-2	Interference Test Data	5-24
5-3	Bond Resistance Test Data	5-25

CHAPTER 1

GENERAL CONSIDERATIONS

Section I. Introduction

1-1. Purpose.

The primary purpose of this manual is to provide information and guidance on the operation and maintenance of cathodic protection systems installed at U.S. Army installations. Maintenance of these systems is critical to the reduction of corrosion on exterior surfaces of buried utility tanks and on the interior surfaces of storage vessels such as water storage tanks, water treatment equipment, etc. Those responsible for maintaining these systems have an important job in preserving the integrity of the various structures, enhancing safety of base personnel, and preventing the release of substances which are detrimental to the environment. The information and guidance in this manual should be reviewed as a first step toward achieving effective operation of installed cathodic protection systems.

1-2. References. Required and related publications are listed in Appendix A.

1-3. Glossary of terms. Special terms used in this document are explained in the attached glossary.

1-4. Structures subject to corrosion.

There are a wide range of structures installed at U.S. Army bases which are subject to corrosion, and the associated expense and liabilities. These structures may be buried, submerged, or partially submerged.

a. Buried piping systems:
   1. Fire protection piping
   2. Natural gas distribution systems
   3. Fuel oil piping
   4. High temperature hot water distribution systems
   5. POL piping
   6. Domestic water piping

b. Buried or partially buried storage vessels:
   1. Fuel oil storage tanks (on-grade or buried)
   2. Motor fuel storage tanks (on-grade or buried)
   3. Aviation fuel storage tanks (on-grade or buried)
   4. Water storage tanks (on-grade)

c. Submerged or Partially Submerged Structures:
   1. Water storage tank interiors
   2. Fuel unloading piers
   3. Steel sheetpiling bulkheads
   4. Heat exchange equipment interiors

1-5. Justification For Cathodic Protection.

Cathodic protection is only one of the many methods of corrosion control. Cathodic protection should be evaluated as one alternative method to control corrosion in an overall corrosion control program. Application of cathodic protection should be evaluated on the basis of technical feasibility, economic analysis, and system functional requirements such as reliability and consequence of failure. In some cases (e.g.,

underground pipelines), field experience has shown that cathodic protection is such an effective means of providing the required levels of safety in the operation of the systems that cathodic protection is required by Federal regulation. Cathodic protection should be considered, possibly in conjunction with other forms of corrosion control such as the application of protective coatings, wherever the system is exposed to an aggressive environment in such a manner that cathodic protection is technically and economically feasible. The following are justifications for application of cathodic protection.

a. Where Feasible. Cathodic protection is primarily feasible when the surfaces to be protected are buried or submerged. External surfaces of buried metallic structures, surfaces of metal waterfront structures such as sheet pilings or bearing piles, and the internal surfaces of tanks containing electrolytes such as water, are applications where cathodic protection is usually technically feasible and is commonly utilized in protecting such structures. Cathodic protection has limited applicability on internal surfaces of small diameter pipelines and other areas where ion flow in the electrolyte is restricted by electrolyte resistance.

b. When Indicated by Experience. When construction of a new buried or submerged system is being planned, the corrosivity of the environment should be considered as one of the factors in the design of the system. If experience with similar systems in the vicinity shows that the site conditions are aggressive based upon leak and failure records, cathodic protection should be used on the new system. Cathodic protection is one of the few methods of corrosion control that can be effectively used to control corrosion of existing buried or submerged metal surfaces. Thus, if leak records on an existing system show that corrosion is occurring, cathodic protection may be applied to stop the corrosion damage from increasing. Cathodic protection can, however, only stop further corrosion from occurring and cannot restore the material already lost due to corrosion.

c. As a Safety Consideration. The Army Technical Manual 5-654 has established standards for the transportation of natural gas by pipelines in order to establish minimum levels of safety. Compliance with these standards require that these pipelines be protected by cathodic protection combined with other means of corrosion control such as protective coatings and electrical insulation. In addition, the U.S. Department of Transportation (DOT) has established safety standards. These standards provide excellent guidelines for the application of cathodic protection to buried and submerged pipelines. The pertinent provisions of the DOT standards follow.

d. DOT pipeline safety standards. Title 49 CFR Part 192 covers natural gas pipelines and requires that:

(1) Coated buried gas pipelines installed after 31 July 1971 must be cathodically protected, regardless of soil resistivity;

(2) Buried, bare, or coated gas pipelines installed before 1 August 1971 must be surveyed (tested) to determine if areas of active corrosion exist. If so, cathodic protection must be applied;

(3) Cathodic protection applied to buried gas pipelines must be monitored (tested) at least annually by a complete over-the-pipe electrical measurement survey to determine adequacy of protection; and

(4) Each cathodic protection rectifier must be inspected at least bimonthly.

1-6. Cathodic Protection Considerations.

It has been stated in section 1-3 that there are some limitations to application of cathodic protection. These possible limitations and other factors must be considered when designing and after installing a cathodic protection system.

a. Environment. The requirements for cathodic protection are dependent on the environment in which the structure to be protected is buried/submerged. No two structures will have identical cathodic protection requirements because of differences in the environment (soil or water). Therefore, design of cathodic protection must take the specific environmental conditions into account. Also, it must be realized

that cathodic protection will only work for those portions of a structure which is buried or submerged.

b. Structure Characteristics. The structure itself determines the requirements to protect it. These characteristics must be considered when designing cathodic protection, especially for a new structure, where many assumptions must be made.

1. Diameter
2. Length (or height, as in a water tank)
3. Construction (mechanical joints or welded pipeline)
4. Pipe material (steel, copper, ductile iron)
5. Existence of tie-ins, laterals, valves and other appurtenances
6. Presence of coatings (type, application method)
7. Depth of installation (pipelines)
8. Type of backfill

Well coated structures, which are electrically isolated from other structures, require less current for cathodic protection, and the cathodic protection systems are less expensive to operate and maintain. Existing structures must be carefully studied and tested in order to properly design cathodic protection systems. The important considerations relate to the following characteristics:

9. Electrical continuity (mechanical joints, plastic inserts, etc.);
10. Presence of other structures;
11. Condition of coating at points along the pipeline;
12. Access to the pipeline for future testing; and
13. Current requirements based on actual tests.

c. Characteristics of Other Adjacent Structures. It is important to consider other structures in the area of a pipeline or tank for which a cathodic protection system is to be installed. Structures can be affected by certain types of cathodic protection systems, and actually be made to corrode in an accelerated manner.

d. Operation and Maintenance. No matter how well designed and installed, a cathodic protection system will not function as intended unless it is operated properly, monitored continuously and maintained.

SECTION II. CORROSION FUNDAMENTALS

1-7. Corrosion as an Electro-Chemical Process

Corrosion of metals is a result of electrochemical reaction. It is a chemical reaction accompanied by a flow of electrical current.

a. Driving Force. The driving force for the corrosion of metals through electrochemical reactions is the free energy of the metal atoms in their metallic form. All chemical systems tend to change so that the free energy present is at a minimum. This is analogous to the flow of water downhill to minimize the free energy due to gravity. Most engineering metals are found in nature in a form with low free energy. These metal ores are chemical compounds consisting of the metal atoms combined with other atoms such as oxygen or sulfur. The process of breaking up these ores into their metallic and non-metallic atoms involves an addition of energy in order to free the metal atoms from the natural, low energy content chemical compounds. The corrosion process is driven by the tendency of these metal atoms to revert to their natural state. If corrosion products are analyzed, their chemical composition is usually identical to the ore from which the metal was originally obtained.

b. The Electrochemical Cell. Electrochemical reactions occur through a combination of chemical reactions and the exchange of electrical charges (current) between areas where these chemical reactions are occurring. The entire process is commonly known as an electrochemical cell.

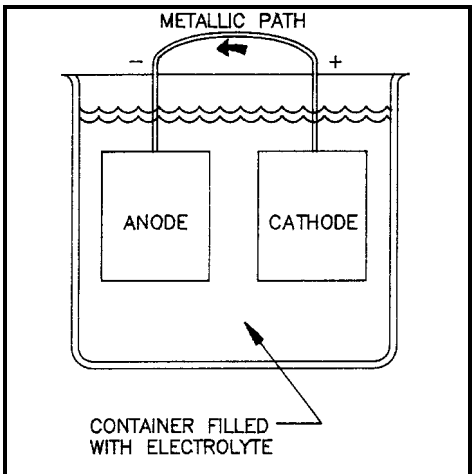

Figure 1-1
Electrochemical Cell

c. Components of the Electrochemical Cell. Every electrochemical cell consists of an anode, a cathode, an electrolyte and a metallic path for the flow of electrical current between the anode and cathode. A schematic electrochemical cell is shown in Figure 1-1.

d. Reactions in an Electrochemical Cell. Chemical oxidation occurs at the anode in an active electrochemical cell. Chemical oxidation is a reaction where an atom or molecule gives up electrons. The chemical shorthand for a typical oxidation reaction is:

EQUATION: $M^o \rightarrow M^+ + e^-$
Where:
M^o = metal atom
M^+ = metal ion
e^- = electron.

In this reaction the metal atom, which in combination with the other atoms in a piece of metal has high strength and other metallic properties, is transformed into a metal ion which usually dissolves. The electron is available for transfer to another site of lower electrical potential. At the cathode, in an active electrochemical cell, chemical reduction occurs. Chemical reduction is a reaction where an atom or molecule gains electrons. The chemical shorthand for a typical reduction reaction is:

EQUATION: $R^+ + e^- \rightarrow R^o$

Where R^+ = positive ion in solution,
e^- = electron
R^o = reduced atom.

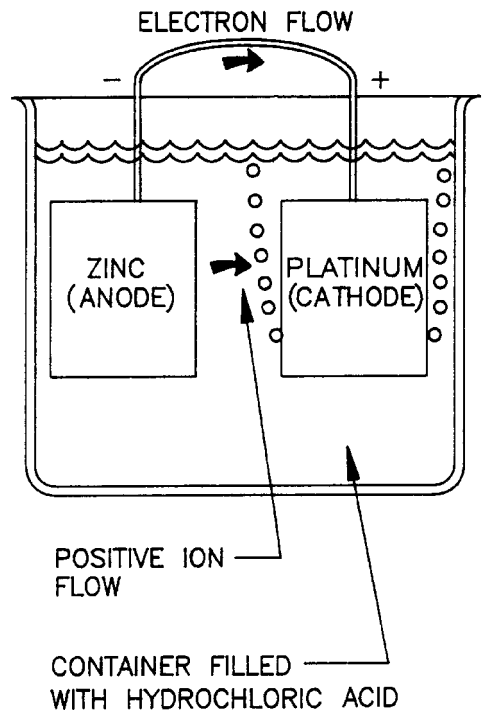

Figure 1-2
Corrosion Cell
Zinc to Platinum in Hydrochloric Acid

A reduced atom may either be discharged as a gas or may be deposited on the cathode. The electrolyte in an electrochemical cell serves as a source of material for the chemical reactions, a medium for the deposition of the products of the chemical reactions, and a path for the flow of charged ions in solution. The electron path, usually a metallic connection, is required so that the electrons produced at the anode can flow from the anode to the sites at the cathode where they are consumed. The electrochemical cell consists of an anode where electrons are produced by a chemical reaction, a cathode where electrons are consumed by a chemical reaction different than the one occurring at the anode, an electrolyte for the flow of ions, and a metallic path for the flow of electrons (DC current). Figure 1-2 shows

an example of a corrosion cell where zinc is connected to platinum in hydrochloric acid. The zinc corrodes at the anode, hydrogen gas forms at the cathode, and electric current flows through the external electron path. This electric current can be made to do useful work. An ordinary dry cell battery is an electrochemical cell. When in storage, the electron path is not completed and the electrochemical reaction which produces the current is only allowed to proceed when the external metallic path is completed.

SECTION III. CATHODIC PROTECTION FUNDAMENTALS

1-8. The Electrochemical Basis For Cathodic Protection

a. Cathodic protection utilizes a flow of direct current electricity to interfere with the activity of the electrochemical cell responsible for corrosion. As shown in Figure 1-3, corrosion can be prevented by coupling a metal with a more active metal when both are immersed in an electrolyte and connected with an external metallic path. In this case the entire surface of the metal being protected becomes a cathode; thus the term "cathodic protection".

b. Potentials Required for Cathodic Protection. Every metal immersed in an electrolyte develops an electrochemical potential due to the free energy of the atoms in the metal. In order to prevent anodic reactions from occurring due to electrochemical reactions on that metal, electrons must be prevented from leaving the metal. In this case, the flow of electrons is from the external source to the metal being protected. Conventional current flow is described by the flow of imaginary positive charges in a direction opposite the electron flow. Since cathodic protection depends on the energy of electrons and their tendency to flow only from an area of high (negative) potential to one of lower (negative) potential, the principle of cathodic protection can also be demonstrated through a hydraulic analogy (see Figure 1-4). In this analogy the surge tank is the metal to be protected. Loss of level in the surge tank is prevented by coupling the tank to a supply of water at higher pressure, leaving the tank full.

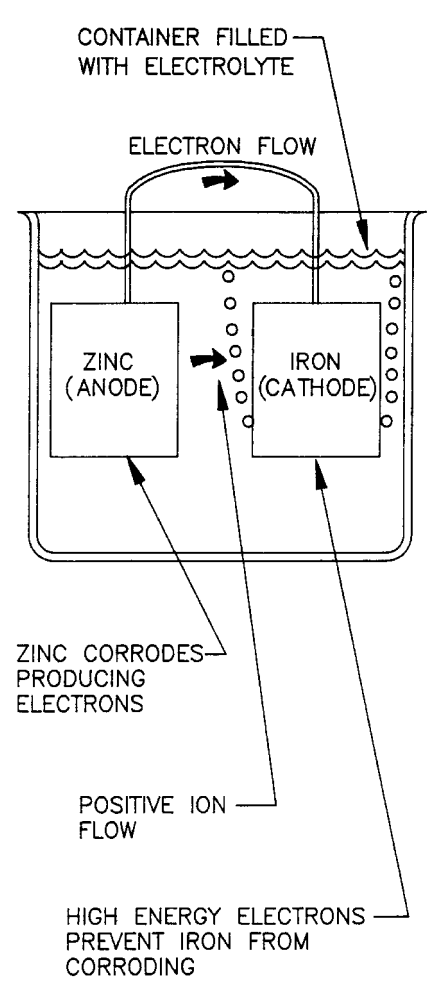

Figure 1-3
Cathodic Protection Cell

1-9. Practical Application Of Cathodic Protection

Cathodic protection is only one of many methods of corrosion control. Cathodic protection should be evaluated as one alternative method to control corrosion in an overall corrosion control program. Application of cathodic protection should be evaluated on the basis of technical feasibility, economic analysis, and system functional requirements such as reliability and consequence of failure. In some cases (e.g., underground pipelines), field experience has shown that cathodic protection is such an effective means of providing the required levels of safety in the operation of the systems that it is required by Federal regulation.

a. Functional Requirements for Cathodic Protection. In order to be technically feasible, cathodic protection requires that the protected structure be electrically continuous and immersed in an electrolyte of sufficient volume to allow the distribution of current onto the structure.

b. Continuity. Electrical continuity of the structure to be protected may be through metallic continuity provided by bolting, or welding of the structure. Ensured continuity is often achieved or ensured by means of electrical connections installed specifically to ensure the effectiveness of cathodic protection. These connections are commonly called "bonds".

c. Electrolyte. The electrolyte is commonly water or the water contained in moist earth. The conductivity of the electrolyte is an important factor in the determination of the need for cathodic protection and in the design of cathodic protection systems.

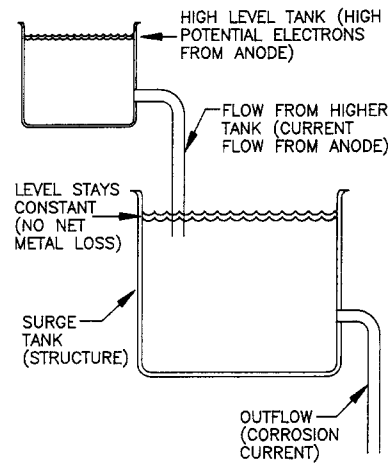

Figure 1-4
Hydraulic Analogy of Cathodic Protection

d. Source of Current. Cathodic protection also requires the presence of a source of electrical current at the proper voltage or potential to prevent attack on the structure. These sources of current are commonly called "anodes". As described below, the anodes may be fabricated from an active metal such as magnesium, or zinc which provides a high potential source of electrons through corrosion on its surface. The anodes may also be fabricated from a relatively inert material which has the ability to pass current from its surface without being consumed at a high rate but which requires the use of an external energy source to increase the potential of the electrons supplied to the structure being protected. Anodes made from active metal area commonly called "sacrificial" or "galvanic" anodes, as the anode material is sacrificed to protect the structure under protection. The inert anodes are commonly called "impressed current" anodes as the external energy source is used to impress a current onto the structure under protection.

e. Connection to Structure. The anodes must be electrically connected to the structure through a metallic connection in order to complete the circuit of the electrochemical cell responsible for the protection of the structure.

f. Accessibility to Structure. In order for a cath-odic protection system to be effective, current must be uniformly distributed to all areas along the structure. On a well coated, isolated structure, this can be accomplished by installing a group of anodes at a location remote from the structure. On bare or nonisolated structures, it is not possible to distribute current to the structure from a concentrated anode installation. The anodes must be distributed at frequent intervals along the structure, typically a pipe. This requires access to the pipe, or at least the ability to install the anodes in the soil along the route of the piping. The typical spacing between anodes is 50 to 75 feet, 5 to 10 feet laterally from the pipe. If the piping is under a building, or a reinforced concrete slab, it will not be possible to place the anodes at the required intervals to provide the necessary current distribution.

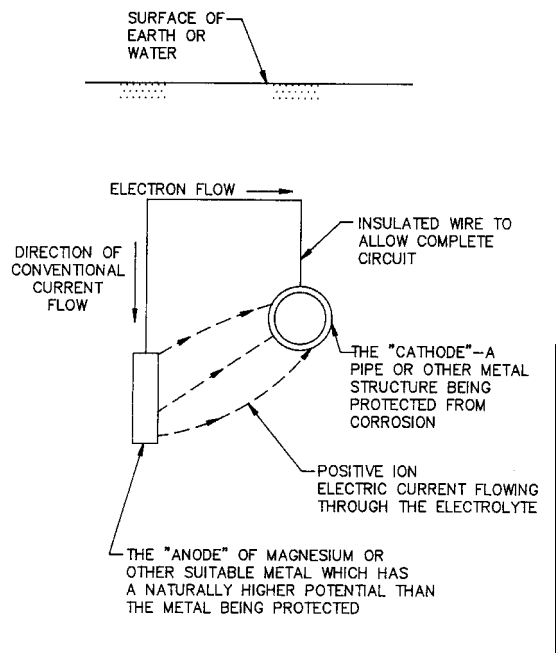

Figure 1-5
Galvanic Anode Cathodic Protection System

1-10. Types of Cathodic Protection Systems.

a. Galvanic Anode Systems. Cathodic protection in the galvanic anode system is essentially a controlled electrochemical cell (see Figure 1-5). Corrosion on the protected structure is shifted to the anode. The anode is consumed in the process but is designed and installed so that it is easily replaced when consumed. Anode life of 10 to 15 years is common. Anode life is dependent upon the amount of current emitted by the anodes and their size. If the cathodic protection system is properly designed and installed, and if it is properly maintained (including periodic replacement of anodes as necessary), the structure being protected is essentially immune to corrosive attack and its lifetime is limited by other factors such as mission requirements or mechanical damage.

b. Anode Materials. The materials used for galvanic anodes are either relatively pure active metals such as zinc or magnesium, or alloys of magnesium or aluminum that have been specifically developed for use as galvanic anodes. In applications where the anodes are buried, a special chemical backfill material surrounds the anode in order to insure that the anode will produce the desired output.

c. Connection to Structure. Galvanic anodes are normally supplied with either lead wires or cast-in straps to facilitate their connection to the structure being protected. The lead wires may be attached to the structure by welding or mechanical connections. These should have a low resistance and should be insulated to prevent increased resistance or damage due to corrosion. Where anodes with cast-in straps are used, the straps should be welded directly to the structure if possible, or, if welding is not possible, used as locations for attachments using mechanical fasteners. A low resistance mechanically adequate attachment is required for good protection and resistance to mechanical damage. Welded connections are preferred to avoid the increase in resistance that occurs with mechanical connections.

d. Other Requirements. As for all systems to be protected, the structure being protected by galvanic anodes must be electrically continuous. The system should also include test stations that are used to monitor the performance and to adjust the system for proper operation. As in all mechanical and electrical systems, cathodic protection systems require periodic inspection, maintenance, and adjustment for satisfactory operation.

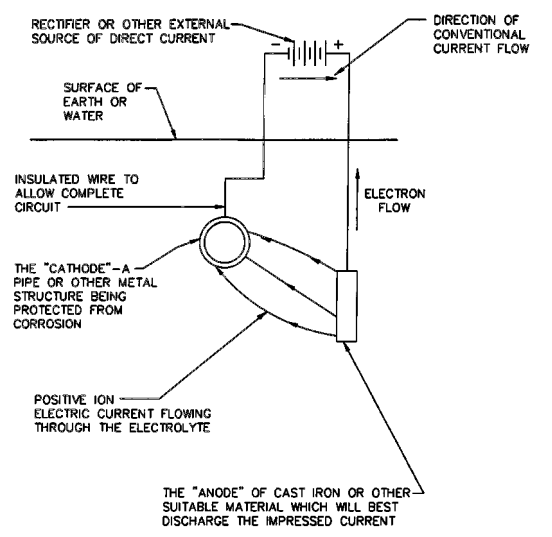

Figure 1-6
Impressed Current Cathodic Protection System

e. Impressed Current Systems. From the standpoint of the structure being protected, cathodic protection using the impressed current method is essentially the same as in the galvanic anode system. As shown in figure 1-6, the cathodic protection system supplies high energy electrons to the structure being protected and the circuit of the electrochemical cell is completed through the soil. However, in the impressed current system, a supply of direct electrical current is used to develop the potential difference between the anode and the structure being protected. Consumption of the anode is not the driving force for the flow of protective current. A properly designed, installed, and maintained impressed current cathodic protection system is as effective as the galvanic anode type of system in preventing corrosion of the structure being protected.

f. Anode Materials. The materials commonly used for impressed current cathodic protection have the capability of passing a current into the environment without being consumed at a high rate. Graphite and high silicon cast iron are the most commonly used

impressed current cathodic protection anode materials; however, other materials such as magnetite, platinum, and newly developed oxide coated ceramic materials have been successfully used. For buried anodes, a backfill consisting of carbonaceous material is normally used to decrease the electrical resistance of the anode; provide a uniform, low resistivity environment surrounding the anode; and allow for the venting of gases produced at the anode surface.

g. Direct Current Power Source. The supply of direct electrical current used to develop the potential difference between the anode and the structure being protected is normally a rectifier which changes alternating current to direct current of the appropriate voltage and current output. However, in special applications, other direct current power sources such as solar cells, thermoelectric cells, motor-generator sets, and wind-driven generators may be used.

h. Connection to Structure. Impressed current cathodic protection anodes are normally supplied with integral lead wires. In impressed current cathodic protection systems, the anodes are connected to the positive terminal of the rectifier and a wire connection is made between the negative terminal of the rectifier and the structure to be protected. The lead wires are connected to the cathodic protection system by welding or mechanical connections. These connections should have a low resistance and should be insulated to prevent increased resistance or damage due to corrosion. In applications where multiple anodes are used, the individual anode lead wires are often attached to a larger header cable which is connected to the rectifier. As the wire between the rectifier and the anode is under a high positive potential, very rapid attack of the wire conductors will occur where there is a break in the wire insulation and the wire comes in direct contact with the electrolyte. The insulation on this cable is very critical and high quality insulation and care in installation is required for this application.

i. Other Requirements. As for all systems to be protected, the structure being protected by impressed current must be electrically continuous. The system should also include test stations which are used to monitor the performance and to adjust the system for proper operation. As in the case of sacrificial anode systems, impressed current cathodic protection systems require periodic inspection, maintenance, and adjustment for satisfactory operation.

CHAPTER 2

CATHODIC PROTECTION SYSTEMS

Section I
Galvanic anode systems

2-1. Applications

Galvanic anode systems are utilized primarily for structures with limited surface area exposed to the soil, and which are capable of being electrically isolated from grounding systems and other larger, bare metallic structures. This limitation is due to the limited current available from galvanic anodes (usually in milliamperes). Typical applications for galvanic anode systems are:

(1) Well-coated (new) gas distribution piping

(2) Steam distribution conduits

(3) Small, coated and electrically isolated fuel storage tanks

(4) Coated and electrically isolated fuel lines.

A galvanic anode system for cathodic protection is a deliberately established corrosion cell using the protected structure as one electrode (the cathode) and a metal near to the active end of the galvanic series as the anode. Because the anode is specifically chosen to corrode away in place of the protected structure, these systems are also known as sacrificial anode systems. Figure 2-1 shows the similarity between a galvanic corrosion cell and a galvanic anode system. As in any electrochemical cell, the electrodes must be immersed in an electrolyte (in this case, soil) and must be connected electrically through a metallic conductor. Occasionally, specific circumstances require the limiting of current flow to the protected structure as in the case of aluminum. Where this occurs, resistance should be placed inside a test station between the anode lead and the structure lead. Also, resistance may be used to limit current to extend the life of the anodes while achieving adequate protection. This resistance is usually a piece of nichrome wire cut to the required length.

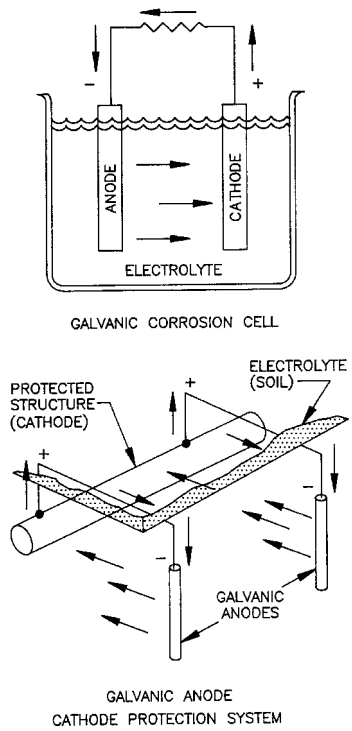

Figure 2-1

2-2. Anode materials

Anodes for galvanic systems may be either zinc, magnesium, or aluminum alloy. Table 2-1 contains data on the types of galvanic anodes. In most cases, magnesium is preferred for soils and fresh water. Zinc is generally limited to use in sea water, brackish water, sea mud, and soils with resistivities below 1500 ohm-cm. Aluminum is generally limited to sea water, brackish water, and sea mud environments.

Table 2-1 Capabilities and Consumption Rates of Galvanic Anodes			
Type	**Potential* (- volts)**	**Amp. Hours (per lb.)**	**Consumption (lb./Ay**)**
Magnesium:			
H-1 Scrap Alloy	1.4-1.5	250-470	19-35
Az-63 Alloy	1.5-1.6	500-580	15-38
High Potential Alloy	1.7-1.8	450-540	16-19
Zinc:			
ASTM B418-73			
Type I (saltwater)	1.1	354	24.8
Type II (soil)	1.1	335	26.2
Aluminum:			
Mercury Alloys	1.10	1250-1290	6.8-7.0
Indium Alloys	1.17	1040-1180	7.4-8.4

* Copper/copper sulfate reference cell practical values are shown.
** Ampere-Year. These are representative values derived from literature provided by various manufacturers.

a. Magnesium anodes. Magnesium anodes are used for protecting buried pipelines and tanks, heat exchangers and chillers, large gate valves, evaporative condensers, hot water tanks, etc. They are available in many shapes and sizes as well as either bare ingots or prepackaged with chemical backfill. Pre-packaged anodes should be used in all underground installations where possible. Although the average corrosion rate of magnesium is 8.8 pounds per ampere-year, the actual rate of corrosion depends on various factors, such as metal composition, electrolyte variation and current output, and may be greater than 8.8 pounds per ampere-year. Magnesium anodes may be obtained in either the standard alloy or a special high-potential, high-manganese alloy. Although the rates of metal loss are similar for both materials, the standard alloy anode will produce a driving voltage of about 0.70 volts with a buried iron or steel cathode while the high manganese alloy anode will produce a voltage of about 0.90 volts with the same cathode. Replacing a standard anode with a high-manganese anode will raise the galvanic cell potential by about 28 percent and, according to Ohm's law, the current flow rate will change in the same proportion. Since the rate of metal loss varies directly with the current flow, the anode life will be reduced by 28 percent. The same rules apply when replacing a high-potential, high-manganese anode with a standard anode. Because the voltage is lower by 28 percent, the life of the anode will be increased by 28 percent. However, in this case, the amount of cathodic protection is reduced because (according to Ohm's law) the lower voltage reduces the current proportionately.

b. Zinc alloys. Zinc anodes are popularly used as grounding cells and in low resistance soils where driving potential isn't a major factor in a system design. Other uses are for reference cells in stray current areas, bracelet anodes on submarine pipelines, hull anodes on marine vessels or piers, and in ribbon form for use in utility ducts. Zinc is not recommended in environments where the pH is over 8, or where the temperature of the electrolyte is over 120 degrees F. Under these situations, zinc becomes cathodic, rather than anodic, and should be avoided. When used strictly as an anode, for cathodic protection current, zinc

is well suited to low resistance environments such as seawater, salt marshes, and brackish water. Zinc normally becomes impractical for protecting large bare areas when the resistance of the electrolyte exceeds 1,500 ohm centimeters. Zinc Alloy compositions are shown in Table 2-2.

Table 2-2
Zinc Alloy Composition

	ASTM B418-73	ASTM B418-73	High
Purity Element (%)	**Type I (Seawater)**	**Type II (soil)**	
Aluminum	0.1-0.5	<0.005	
Cadmium	0.035-0.10	<0.003	<0.003
Iron	<0.005	<0.0014	<0.0014
Lead	<0.003	<0.003	<0.003
Zinc	Balance	Balance	Balance

c. Aluminum alloys. Aluminum is limited as a galvanic anode to applications of seawater and chloride rich environments such as offshore petroleum platforms, submarine pipelines and on-shore, oil production separation equipment using a saltwater tank. There are two common alloy families, one uses mercury, the other uses indium, to reduce the passivating effect of the oxide film that forms on aluminum. The mercury alloy is used in free-flowing seawater and its principle advantage is the high number of ampere hours of capacity. (Refer to Table 2-3). It's primary disadvantages are that it cannot be used in brackish water, silt/mud zones, or at elevated temperatures. Under high humidity atmospheric storage conditions, some grades have been known to degrade and become totally unusable prior to installation. There is some

Table 2-3
Aluminum Alloy Composition and Performance

Element (%)	**Al/Hg/Zn**	**Al/In/Zn**
Zinc (Zn)	0.35-0.50	2.5-6.0
Silicon (Si)	0.05-0.20	0.05-0.20
Mercury (Hg)	0.035-0.050	---
Performance:		
Consumption (lb./Ay)	6.8-7.0	7.4-8.4
Ampere Hours/lb.	1250-1290	1040-1180
Potential - Ag/AgCL	1.05	1.12
- Cu/CuSO4	1.10	1.17

controversy concerning the long term environmental effects of this alloy in sea water, however, it is well known that heavy metals such as mercury, in nuclear reactors will adversely affect the shutdown capability

of the reactor core. The indium alloy is used in free-flowing seawater, brackish water, silt/mud zones, and at elevated temperatures. Its basic limitation is a reduction in ampere hours of capacity. Aluminum anodes have a variety of standard cores such as pipe, strap, bar, end type and side type. Occasionally, aluminum is used as an impressed current anode for protecting the interiors of water tanks. Because it is relatively inexpensive, compared to other impressed current anode materials, they are provided in 1/2-inch diameter screwed rod sections for use in tanks where seasonal icing usually destroys the anodes, requiring annual replacement.

2-3. Test stations

The most common type of test station used in galvanic anode cathodic protection systems is the current/potential test station shown in figure 2-2. In this test station, the anode lead wire is connected to the structure lead using a 0.01 ohm resistor (shunt) which is used to measure the current output by measuring the voltage drop across the shunt. The second structure lead is used to measure potential using a non-current carrying connection, thus eliminating any potential drop along the conductor. The second structure connection can also be used as a spare if the primary structure connection is damaged. Test stations for galvanic anode cathodic protection systems can either be of the flush-mounted or above grade type. If flush-mounted test stations are used, the reference electrode can be placed in the soil exposed in the bottom of the test station in order to measure the structure-to-electrolyte potential. Location of such test stations directly over the structure is often advantageous as any IR drops due to current flowing through the soil are minimized. Other test stations used in galvanic anode cathodic protection systems are: the potential test station, the soil contact test station, the line current (IR Drop) test station, the insulating joint test station, the casing insulation test station, and the bond test station.

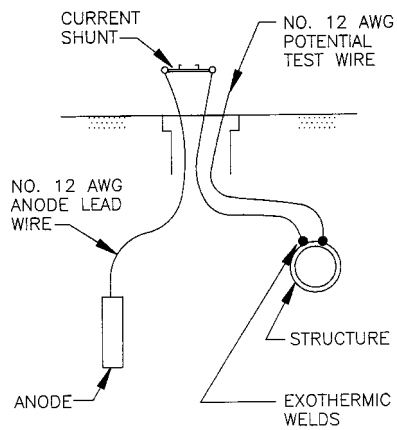

Figure 2-2

2-4. Exothermic welding materials

Most connections to structures are made with an exothermic welding process which thermally bonds the conductor to the structure. Other methods may change the temper of the conductors, thus becoming brittle, and damage the insulating properties of the cable insulation. Exothermic welding uses a graphite mold to contain the mixture of copper alloy and magnesium starter powder (Figure 2-3). After igniting the powder with a flint gun, the powder becomes molten, and drops on the cable and structure. The remaining slag on the connection is removed by striking the weld with a hammer after cooling. Special attention should be given to coating any attachment or cable splice to prevent bimetallic corrosion attack under wet or submerged conditions. The coating should be solvent free to prevent deterioration of the insulation. Structures that are in areas containing vapors of certain types of flammable substances may require the use of grounding clamps to make the cable attachment.

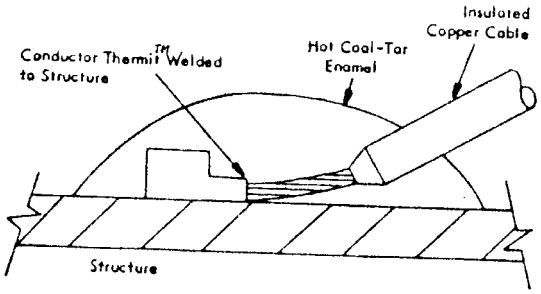

Figure 2-3

2-5. Insulating materials

To electrically isolate cathodically protected structures from unprotected or grounded structures requires the

mechanical installation of non-conductive materials between the metal components. The insulating material should not deform or deteriorate due to the operational conditions of the external, or internal environment, or the structure itself.

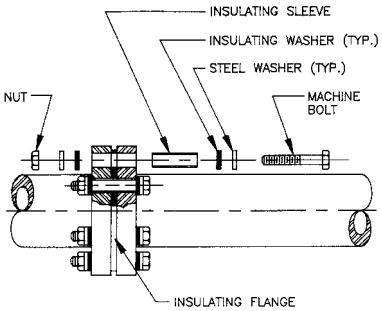

Figure 2-4

a. Flange isolation kits. As a general recommendation, insulated joints should be installed above ground if at all possible. Single washer kits are used underground with all the insulating washers installed on one side of the flange assembly. This permits the bolts to be protected by the cathodic protection system on one side of the insulating joint. Double washer kits are used for above ground applications where bolt protection is not a concern. If one washer should fail, the opposing insulating washer will provide isolation. Once again, there are a wide variety of materials to choose from, depending on the particular application. Flange gaskets are selected on the basis of size, ANSI pressure rating, full face or raised face, and material composition to suit the pipeline product. The components of a flange isolation kit consist of a gasket, sleeves, insulating washers, and steel washers. Figure 2-4 illustrates a typical flange isolation kit.

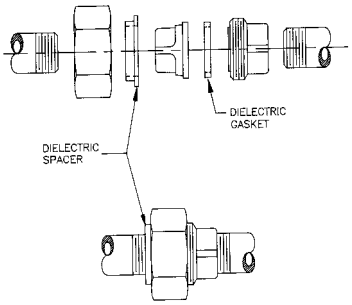

Figure 2-5

b. Dielectric insulating unions. Dielectric insulating unions perform the same basic function as flange isolation kits, inserting a high resistance plastic bushing between the union faces. They are normally available as "O" Ring Type or Ground Joint Type, in pressure ratings of from 150 to 3,000 pounds working pressure. Common installations include hot water heaters, service station pumps, natural gas distribution service lines, and hydraulic lines. Figure 2-5 depicts a typical diectric insulating union.

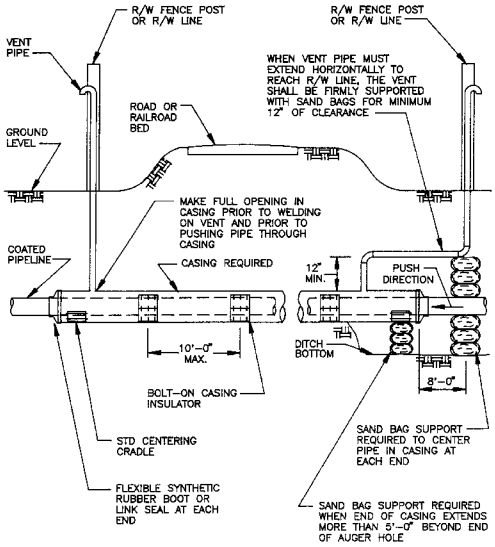

Figure 2-6

c. Casing Insulators and End Seals. In the mid-1980's the effects of electrically shorted casing and inattentive record keeping received wider attention from regulatory agencies, due to some unfortunate incidents. Previously, casings were not considered to be an integral part of a pipeline system and were given little attention during design, construction and maintenance stages. The cause and effect relationship of electrically shorted casings are well known. This paragraph describes the types of materials that are currently available. The best possible solution is to eliminate casings altogether, but for right now the industry is relegated to coping with the problem. The only other alternative is careful selection and installation of the components during construction, either new or rehabilitative. Casing insulators (Figure 2-6) generally consist of molded polyethylene segments, joined together to form rings at frequent intervals on the pipe, to support the weight of the carrier pipe with product and keep it centered in the casing. On occasion these segments become damaged during installation, or during operation, due to soil shifting and pipe movement, resulting in a shorted condition. Casing end seals (Figure 2-7) have traditionally consisted of rubber boots held in place with hose clamps, shrink sleeves with support skirting, and a proprietary rubber link system. None of these is universally acceptable because of the varied field conditions that commonly occur. Only careful selection and supervision during installation can prevent the end seals from being the weakest link in the system.

2-6. Wire

One component that is a vital part of any cathodic protection system involves a metallic return path to complete the circuit. Most systems use wire or cable to accomplish this function. Conductors typically used for underground service are made of solid or stranded copper, rated at 600 volts, with a variety of insulation materials designed for the type of electrical and chemical exposure to be encountered. Conductors are rated on their ampacity under certain temperature and service conditions. Insulation values also vary depending on wet or dry conditions. The following data is general in nature, covering the most common types, and specification data should be obtained directly from manufacturers pertaining to their products. The types of wire most often used in galvanic anode cathodic protection systems is summarized in table 2-4

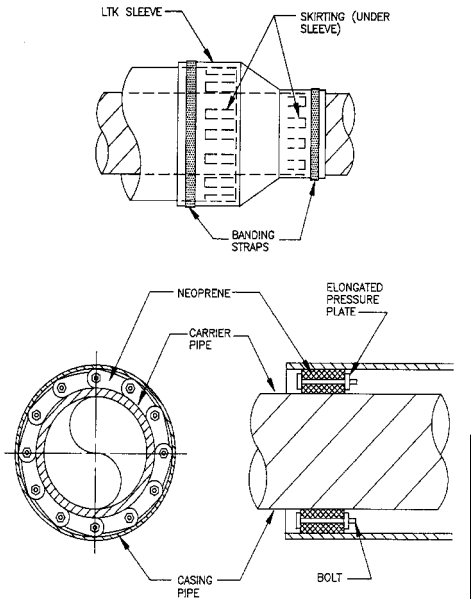

Figure 2-7

.

Table 2-4
Wire and Cable Insulation Designations for Galvanic Anode Systems

Designation	Insulation	Thickness (inches)	Range	Specification
TW	Polyvinyl Chloride (PVC)	0.030 0.045 0.060	#14-#10 #8 #6-#2	U.L. Standard 83 (60 deg.C.wet/dry)
THW	Polyvinyl Chloride (PVC)	0.045 0.060 0.080	#14-#10 #8-#2 #1-#4/0	U.L. Standard 83 (75 deg.C.wet/dry
THHN	PVC/Nylon Jacket (.004" nylon)	0.015 0.020	#14-#12 #10	U.L. Standard 83 (90 deg.C.-dry)
THWN	PVC/Nylon Jacket (.004" nylon)	0.015 0.020	#14-#12 #10	U.L. Standard 83 (75 deg.C.-wet)

2-7. Backfill

Most magnesium and zinc anodes used in soils require the use of a prepared backfill around the anode for

the following reasons:

a. Increases the effective surface area which lowers the anode-to-earth contact resistance.

b. The bentonite clay absorbs and retains moisture.

c. The gypsum provides a uniform, low resistance environment.

d. The sodium sulfate (a depolarizing agent) minimizes pitting attack and oxide film formation.

Today, the standard backfill for magnesium and zinc consists of:

75% Hydrated Gypsum ($CuS0_4+2H_20$)
20% Bentonite Clay
5% Sodium Sulfate.

When properly combined, these elements provide a uniform backfill resistance of 50 ohm-centimeter when measured by the ASTM G-58 Soil Box Test Method and corrected for temperature variations. Most reputable anode fabricators will test and document the resistance values for each batch of backfill. As a historical side note, zinc was formerly thought to perform better in a backfill of 50% gypsum and 50% bentonite. Over the years, it has been determined that zinc may polarize and provide inaccurate readings if sodium sulfate is not used in the backfill. To keep the backfill uniformly around the anode, the anode bars with the lead wire attached are placed in cloth bags or cardboard boxes and the prepared backfill is added. Cloth bagged anodes are usually encased within a triple layered paper bag and are resistant to short periods of inclement weather and handling damage. Prior to backfilling, the paper bag is removed and discarded, permitting the cloth bag containing the backfill to readily absorb moisture. This allows for more rapid acquisition of field measurements after installation. The anode bars usually shift in the backfill, either during transportation or manual handling of the units. In high resistivity soils, the exposed anode surfaces may result in a reduction of current output, caused by a higher groundbed resistance. This conditions seems to be a concern when soil resistance exceeds 50,000 ohm-centimeters and when more than 25% of the anode bar is exposed.

Section II. Impressed current systems

2-8. Applications

Impressed current cathodic protection (ICCP) systems are utilized when the extent of the piping system, or size of the structure is large, when there is no effective coating system, or when the structure cannot be isolated from grounding systems or other extensive bare piping networks. All of these conditions increase the current requirements for cathodic protection beyond the economical capabilities of the galvanic anode cathodic protection system. Examples of these applications of impressed current systems are as follows:

a. bare piping systems (gas, steam distribution)

b. copper concentric neutrals of electric distribution cables - fueling systems

c. large fuel storage tanks (U/G)

d. large above grade storage tank bottoms

e. water storage tank interiors

f. waste water process equipment

g. shore-side structures such as piers, docks, bulkheads.

This method of cathodic protection is a deliberately established electrolytic corrosion cell. The protection feature is obtained by setting the direction of current flow so that the protected structure is the cathode of the cell and some other material is the anode. Figure 2-8 shows the similarity between an electrolytic cell and an impressed current cathodic protection system. Present day impressed current systems use "rectifiers" as the external source of current in the electrolytic cell. The "rectifier" is an assembly including a multi-tap alternating current (AC) step-down transformer, an arrangement of metallic rectifiers, a protective circuit breaker or fuse, and meters for monitoring both voltage and current output. Figure 2-9 shows the complete circuit diagram for the most commonly used commercial rectifiers. Other types of rectifiers will be discussed in paragraph 2-10.

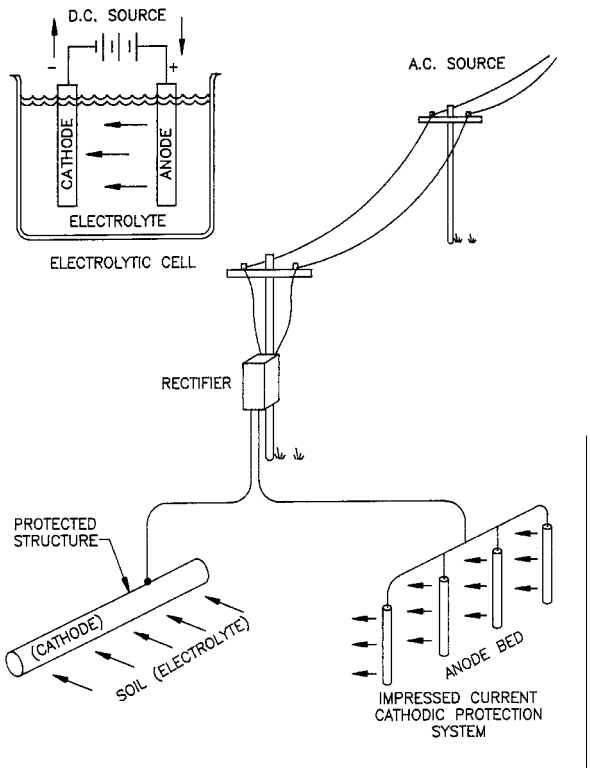

Figure 2-8

2-9. Anode materials

The anodes of an impressed current system provide the means for the protective current to enter the electrolyte. Since the anodes form the corroding part of the system, the best material is one which has a low rate of weight loss per ampere-year (see Table 2-5). The most commonly used materials for impressed current anodes are graphite and high-silicon cast iron. Aluminum is sometimes used in water storage tanks. In areas where heavy icing is not a problem, high silicon cast iron anodes are used instead of aluminum for lower long-term cost. Platinum coated titanium or niobium anodes are becoming more prevalent as impressed current anode material. Prior to the 1970's, there were only three types of anodes primarily used for impressed current groundbeds - high silicon cast iron, graphite and scrap steel. As technology progressed, so did the types of materials that are commonly used by corrosion personnel. The types of materials have specialized applications and, when installation and operating costs are assessed, very few anodes can be used universally for any type of application and still achieve a desirable design life. In most soils, anodes evolve oxygen and the anode oxidizes as the current is discharged. In chloride containing soils or water, anodes evolve chlorine gas which forms hydrochloric acid, and the anodes break down chemically. The whole purpose of this explanation is to point out that some anodes perform well in the presence of oxygen and others in the presence of acids.

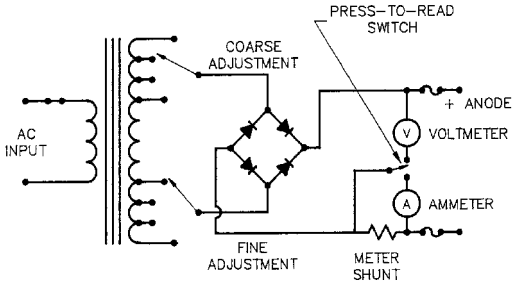

Figure 2-9

Table 2-5 Electrochemical Equivalents of Common Structural Metals	
Metal	**Weight Loss (Pounds per Ampere-Year)**
Carbon (Graphite)	2.2
Iron	20.1
Aluminum	6.5
Lead	74.5
Copper	22.8
Zinc	23.6
Magnesium	8.8
Nickel	21.1
Silver	77.6
Tin	42.0

a. High Silicon Cast Iron. Cast iron anodes are produced in two alloy types with the principal addition of chromium, developed in 1959, to improve the life in chloride soils and water. Table 2-6 shows the metallurgical composition of the two alloys. The principal reason for superior cast iron performance is the formation of a silicon oxide ($Si0_2$) film that forms on the anode surface, reducing the rate of oxidation, and retarding the consumption rate. They have good electrical properties and the resistance of the alloy is 72 micro-ohms per cubic centimeter at 20 degrees C. To be successful in soils, the anodes are backfilled with metallurgical or petroleum coke breeze to reduce the anode resistance and increase the effective anode surface area. Even when the anodes are pre-packaged in coke breeze filled canisters, filling the annular space between the canister and the soil with additional coke breeze is a recommended practice. In seawater, the anode will discharge current at very low voltages compared to graphite rods and, therefore, do not require backfill. Manufacturers of cast iron anodes developed cable-to-anode connection procedures which distributors are required to follow. Therefore, there has been a lower incidence of connection failures, compared to graphite anodes. The anodes exhibit superior conductivity and experience very little change in resistance with time, unless the anode is damaged. Figure 2-10 shows the construction of a typical cast iron anode. The high tensile strength of the metal is an asset in some circumstances, except that their very low elongation makes them brittle and subject to fracture from severe mechanical and thermal shock. Cast iron anodes are manufactured in a wide variety of dimensions, shapes and weights. Refer to table 2-7 for a description of the various sizes. A proprietary type of cast iron anode, originally manufactured from "off-specification" corrosion resistance piping, is called a tubular anode. This utilizes the ASTM 518 Grade 2 chromium alloy and has demonstrated since 1971 to have superior resistance to "end effect", common to anodes with poor connection resistance values. Figure 2-11 illustrates this type of anode.

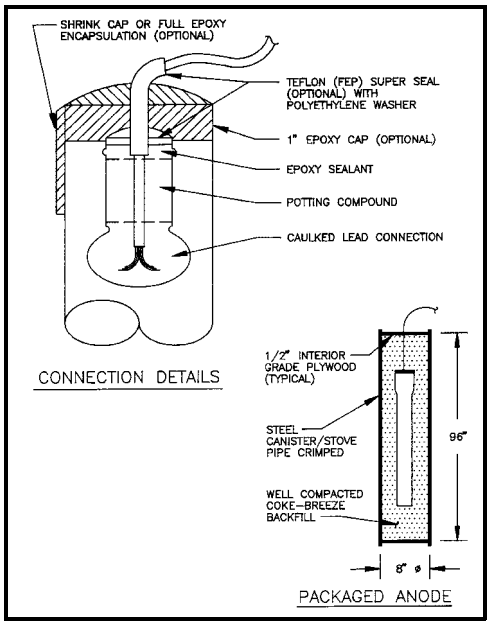

Figure 2-10

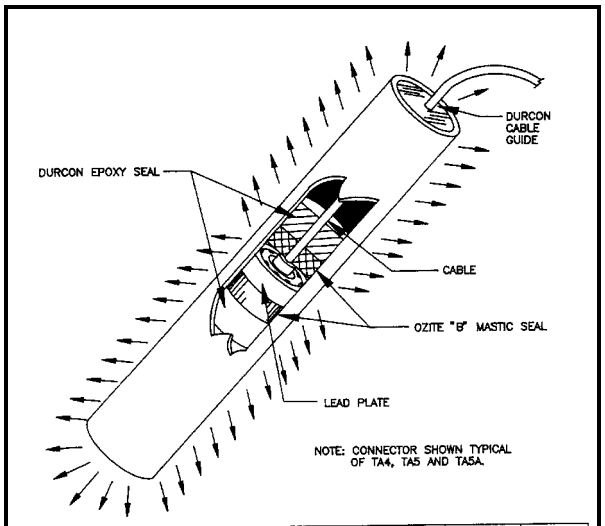

TYPE	WEIGHT lbs (kg)	AREA ft2 (m2)	I.D. in (mm)	O.D. in (mm)	WALL THICKNESS in (mm)	LENGTH in (mm)
TA-1	31 (14)	2.4 (1.5 X 10^{-3}m)	1-27/32 (47)	2-21/32 (67)	11/32 (10)	41 (1067)
TA-2	46 (21)	4.0 (2.6 X 10^{-3}m)	1-3/8 (35)	2-3/16 (56)	11/32 (10)	84 (2134)
TA-3	63 (29)	4.9 (3.2 X 10^{-3}m)	1-27/32 (47)	2-21/32 (67)	11/32 (10)	84 (2134)
TA-4	85 (39)	6.9 (4.5 X 10^{-3}m)	2-15/16 (75)	3-3/4 (95)	11/32 (10)	84 (2134)
TA-5	110 (50)	8.7 (5.6 X 10^{-3}m)	3-15/16 (100)	4-3/4 (121)	11/32 (10)	84 (2134)
TA-5A	175 (79)	8.7 (5.6 X 10^{-3}m)	3-3/8 (86)	4-3/4 (121)	11/16 (17)	84 (2134)

Figure 2-11

Table 2-6
Cast iron Composition

Element	ASTM-518	
	Grade 1	Grade 2
Silicon	14.2 - 14.75%	14.2 - 14.75%
Manganese	1.5% max.	1.5% max.
Chromium	-----	3.25 - 5.0%
Carbon	0.75 - 1.15%	0.75 - 1.15%
Copper	0.50% max	0.50% max
Iron	Balance	Balance
Consumption Rate		
Soil	1 lb./Ay	0.75 lb./Ay
Seawater	18.5 lb./Ay	0.25 lb./Ay

Table 2-7 Cast Iron Anodes			
Size (in.)	Nominal Weight (lbs.)	Area (Sq. Ft.)	Cable Size (max.)
1.1 x 9	1	0.2	#8
1.5 x 9	4	0.3	#6
2 x 9	5	0.4	#4
3 x 3	6	0.25	N/A
1 x 30	7	0.7	#6
1 x 60	12	1.4	#6
1.5 x 60	12	1.0	#6
1.5 x 30	13	1.0	#6
6 x 2.5	16	0.5	N/A
1.5 x 60	25	2.0	#6
1.5 x 60	26	2.0	#6
2 x 30	30	1.3	#1/0
2 x 60	44	2.6	#6
12 x 3.5	53	1.0	N/A
2 x 60	60	2.8	#1/0
3 x 36	80	2.5	#1/0
3 x 60	110	4.0	#1/0
4.5 x 60	220	5.8	#1/0

b. Graphite Anodes. Graphite rods have been used as an impressed current material for many years. The basic configurations consist of round or square rods, manufactured from a slurry of powdered petroleum coke and coal tar resin. The coal tar is used as a bonding agent to hold the graphite particles together and then baked for a month at high temperatures to fuse the mixture. This process increases the resistance to oxidation and subsequent breakdown. There are many types of graphite compositions and the type used for cathodic protection groundbeds is one of the most porous. The porosity allows moisture penetration to eventually migrate to the connection, causing failure at the cable connection. A more dense anode is expensive, therefore, the porosity is reduced by impregnating the rods with an inexpensive filler of linseed oil, microcrystalline wax, or a phenolic based resin. There is controversy concerning the best type of filler and even whether a filler really reduces moisture penetration over long periods of time. Some fillers have caused deep well anode groundbeds to become fouled and develop a high circuit resistance when the anodes have been driven at high current density levels. It is very important to have a proper anode-to-cable connection with any anode material. For years, the manufacturers of graphite anodes had no specification for a proper anode lead wire connection. This led to varying procedures and numerous failures attributable to poor material, poor workmanship, and no quality control parameters prior to shipment. Many

users have developed their own assembly standards which makes graphite anodes a customized and consequently, more expensive product than it could be if an industry standard existed. Additional specification details should include:

(1) Type of container - lead, brass, molten, compression.

(2) Connection Depth/Diameter - 3", 4", 5", centered.

(3) Connection Sealant - thermoplastic, thermosetting (epoxy).

(4) Cable Sealant - TFE tubing, shrink cap, encapsulation.

(5) Impregnation - wax, linseed oil, resin.

(6) Sizes - 3"x 30", 3"x 60", 4"x 40", 4"x 80"

Graphite should not be operated at current densities exceeding one ampere per square foot in soil, or 0.23 amperes per square foot in water. For optimum life in soils, most engineers design graphite anodes for a maximum density of 0.20 amperes per square foot, or one ampere per 3" x 60" rod. If current densities are within these ranges, the consumption rate will be approximately 2 pounds per ampere year (Ay). Exceeding these limits, the material becomes mushy and is less conductive, due to chemical breakdown of the crystal boundary. Unfortunately, graphite is brittle and may be easily damaged during transportation, either bare or packaged. Special handling and padding is necessary to prevent cracking and breaking.

c. Aluminum anodes. Occasionally, aluminum is used as an impressed current anode for protecting the interior of water tanks. Because it is relatively inexpensive compared to other impressed current materials, anodes are provided in 1/2 inch diameter by ten foot long screwed rod sections for use in tanks where seasonal icing usually destroys the anode lead wire connection, requiring annual replacement. This anode system does not contaminate potable water but the consumption rate of 9 pounds per ampere year limits the cost effectiveness on the basis of cost per year of service compared to other anode systems.

d. Lead-Silver Anodes. Lead alloy anodes are only used in free flowing seawater applications and may employ various metals such as antimony, lead, tin and 1% or 2% silver. Commonly supplied in rod or strip form, of 1.5" diameter by 10 inches long, they have been used extensively in Europe with a 2% silver alloy, which doubles the life. Upon initial start up, the consumption rate is about three pounds per ampere year and eventually a black, passive film of lead peroxide forms to extend the life of the anode surface, resulting in consumption of about 0.2 pounds per ampere year. Normal current density ranges from 3 to 25 amps per square foot. In silting or low chloride conditions, this oxide film does not form and the anode is consumed rapidly. Cable connections are made by drilling a hole and silver soldering the lead wire at the base of the hole. The connection cavity is then filled with epoxy to prevent moisture penetration. Installation is accomplished by hanging the anodes from a structure, dock or pier in a perforated FRP pipe or by a support device to maintain its position. This support is important to prevent ice damage and keep the anodes from coming in contact with mud or silt.

e. Platinum anodes. Platinum can be used as an anode coating for almost every type of cathodic protection installation. Structures in a vast array of environments such as underground, offshore, concrete, cathodic protection systems. Since platinum has such a low consumption rate, 0.00018 pounds per ampere year, only a small amount is needed for a twenty year anode life. Pure platinum, by itself, would be too expensive. The platinum is normally coated over noble base metals such as titanium and niobium. When anodes are in the form of wire and rods, there may be a copper core to increase the conductivity for lengths in excess of 25 feet since titanium and niobium are relatively poor electrical conductors compared to copper (refer to Figure 2-12). The passive film on titanium starts to break down at 10 volts, anode-to-cathode

potential, and is limited to low resistance environments such as seawater. Niobium has a breakdown voltage of 120 volts, power plants, and the internals of piping, tanks and machinery have utilized platinum for anode-to-cathode potential, and is used in higher resistance electrolytes. Current densities range from 50 amps in soils to 500 amps in seawater, depending on the anode surface area and thickness of the coating. Platinum has been coated on base metals using many techniques including sputtered, electrode-position, cladding, and metallurgically bonded. A general consensus of knowledgeable engineers finds that metallurgically bonded anodes seem to experience fewer failures because the metals are compressed together in an oxygen free vacuum. This provides an oxide free, low resistance and complete bond between the metals, thereby maximizing design life. Cladding involves wrapping a thin sheet of platinum around a rod and spot welding the platinum to the base metal at the overlap area. The limited weld area allows the underlying base metal to oxidize, thus increasing resistance and achieving minimal design life. The smooth surface has little bearing on the life because the surface becomes irregular once current is discharged. Electrodeposition techniques plate a film of platinum on the base metal but the process results in a porous surface which is less likely to achieve full life due to high resistance oxide film formation. Thermal decomposition and welded techniques exhibit the same problems as cladding and, as of the late 1980's, are rarely used. The anode-to-cable connection is critical and improper connections can result in premature failure. Users should assure that the anodes are manufactured in compliance with their specifications by skilled personnel under the guidance of established quality control methods. The major disadvantage of platinum is its poor resistance to anode acid evolution in static electrolytes, rippled direct current, and half wave rectifiers. Use of a 3 phase transformer rectifier in seawater systems has been known to double the life of platinum anodes by reducing the ripple on the D.C. output.

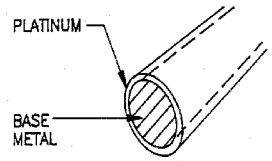

STANDARD PRODUCT SPECIFICATIONS

ANOMET 30 (20% Nb)

DIAMETER inches	Nb THICKNESS inches	RESISTANCE microhm/ft.	PT THICKNESS μ-in. (2X)
.750	.038	22	300 (600)
.500	.025	50	200 (400)
.375	.019	89	150 (300)
.250	.013	201	100 (200)
.188	.009	356	75 (150)
.125	.006	806	50 (100)

ANOMET 40 (40% Nb)

DIAMETER inches	Nb THICKNESS inches	RESISTANCE microhm/ft.	PT THICKNESS μ-in.
.250	.025	256	200
.188	.019	453	150
.125	.013	1025	100
.093	.010	1822	75
.063	.007	4102	50

ANOMET 100TI (100% TI)

DIAMETER inches	TI THICKNESS inches	RESISTANCE microhm/ft.	PT THICKNESS μ-in. (2-1/2X)
.750	SOLID	468	300 (750)
.500	SOLID	1054	200 (500)
.375	SOLID	1874	150 (375)
.250	SOLID	4215	100 (250)
.188	SOLID	7454	75 (188)
.125	SOLID	16862	50 (125)

Figure 2-12

f. Ceramic and Mixed Metal Oxide Anodes. Mixed metal oxide anodes were developed in Europe during the early 1960's for use in the industrial production of chlorine and caustic soda. The first known use of the technology for cathodic protection use occurred in Italy to protect a seawater jetty in 1971. These anodes exhibit favorable design life characteristics while providing current at very high density levels. The oxide film is not susceptible to rapid deterioration due to anode acid generation, rippled direct current, or half wave rectification, as is common with other precious metal anodes. The composition of the anode

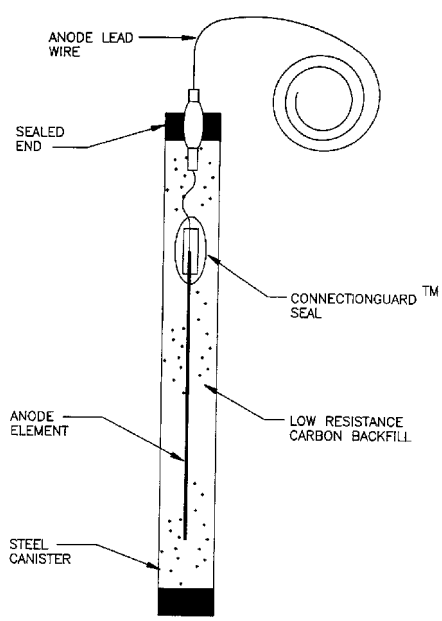

Figure 2-13

consists of a titanium rod, wire, tube or expanded mesh with the oxide film baked on the base metal (refer to Figure 2-13). Sometimes they may be referred to as dimensionally stable, ceramic or linear distributed anodes. In oxygen evolution environments such as soils, the oxide consists of ruthenium crystals and titanium halide salts in an aqueous solution that is applied like a paint on the base metal and baked at 400 to 800 degrees centigrade, forming a rutile oxide. In chlorine evolving environments such as seawater, the oxide consists of an aqueous solution of iridium and platinum powder that is also baked at high temperatures to achieve a desirable film. After baking, the rutile oxide develops a matte black appearance and is highly resistant to abrasion. Some manufacturers produce variations of the oxide films specifically for chloride or non-chloride electrolytes and they are not interchangeable. Normally, titanium will experience physical breakdown around 10 volts, but the oxide film is so highly conductive (0.00001 ohm-cm resistivity) that the current, which takes the path of least resistance, is discharged from the oxide rather than the base metal even with a rectifier voltage of 90 volts in soils. This is in contrast to the insulating titanium dioxide film that naturally forms on the surface of bare titanium. When the mixed metal oxide film has been consumed, the insulating titanium dioxide film will cover the anode and not allow current to discharge unless the applied voltage is greater than 10 volts in seawater or 50 to 70 volts in fresh water. The U.S. Army Construction Engineering Research Laboratory (USACERL) has developed a ceramic anode as a Facility Engineering Application Program (FEAP). Good performance of the ceramic anode has been demonstrated in a wide variety of applications. Procurement, material specifications, performance parameters and application designs are detailed in Engineering Technical Letter (ETL) 1110-9-10 (ER). The following data details the maximum recommended current densities for various electrolytes:

(1) Soil, mud, fresh water: 9.3 amps/square foot (20 years)

(2) Seawater: 55.7 amps/square foot (15 years).

Anodes in soil or mud must be backfilled with fine, low resistance, calcined petroleum coke breeze for maximum life and performance. Even when the anode is pre-packaged with petroleum coke, conservative engineering judgement would dictate that the anode package be surrounded with metallurgical coke, prior to finishing the backfilling with native soil. Consumption rates at these densities range from 0.5 mg per Ay in seawater to 5 mg per Ay in coke breeze, fresh water, and sea mud. As with any anode, the connection must be constructed so as to be moisture proof, water tight and have no more than .001 ohms of resistance. Advantages of mixed metal oxide anodes:

(1) Lightweight and unbreakable

(2) Negligible consumption rate

(3) Inert to acid generation

(4) Dimensionally stable

(5) High current density output

(6) Cost effective

g. Polymer Conductive Anodes. In 1982, a new anode material was test marketed. The material provides a small amount of current in restricted spaces such as internal pipe surfaces, heat exchangers, utility ducts, and areas shielded from conventional groundbed current. The material resembles electrical cable but actually consists of a stranded copper conductor with an extruded, conductive polyethylene jacket. This concept is used in underground concentric power cables as a conductive shield around the ground wires. The

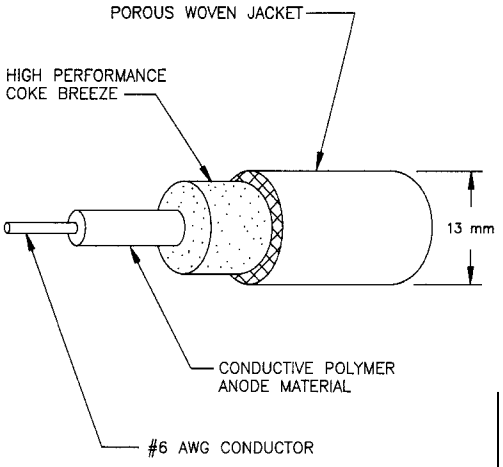

Figure 2-14

polymer contains carbon granules which discharge the current, leaving behind a polymer matrix. The anode should be backfilled in carbonaceous coke breeze for maximum life. This material is shown in figure 2-14. Some manufacturers offer an optional plastic mesh, to separate the anode from the cathode in restricted spaces, preventing electrical shorting between the anode and cathode. Currently, the material is available in four different diameters and the current output ranges from 3 to 9 milliamperes per linear foot.

2-10. Rectifier units

Many sources of direct current (D.C.) power are available for use with impressed current systems and are as follows:

(1) Transformer rectifier

(2) Solar photovoltaic cells

(3) Thermoelectric generators

(4) Turbine generator units

(5) Engine generator units

(6) Wind powered generators

Transformer rectifiers (Figure 2-15) are the most frequently used power source for impressed current anode systems. The unit consists of a step-down transformer, to reduce alternating current to an acceptable level, and a rectifying element to convert the alternating current (A.C.) to usable direct current (D.C.). Output terminals and a whole host of options and accessories complete the final assembly of the unit. There are almost unlimited combinations of rectifier features and types, depending on the requirements of the project. These "options" are summarized in table 2-8.

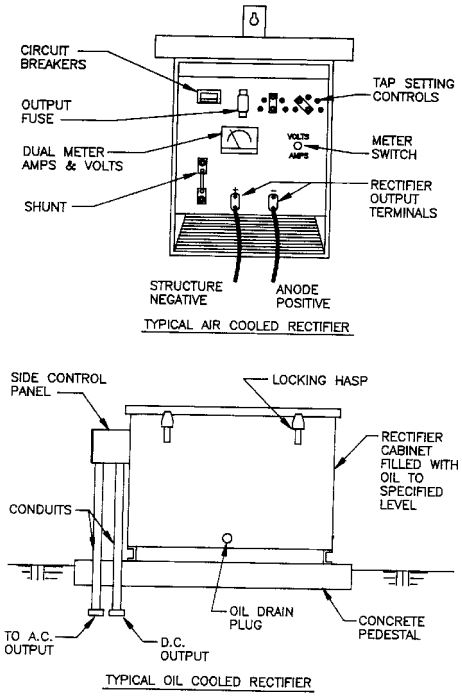

Figure 2-15

Table 2-8 Rectifier Options and Features	
1. Enclosure Type	Slide out racks Swing out cabinet Utility Custom Pole mount Wall mount Pad mount Photovoltaic (solar panel)
2. Cooling Type	Air cooled Oil cooled Explosion proof Submersible Fan cooled Forced oil cooling
3. Control Type	Standard control Current regulated Voltage regulated Automatic potential control Solid state control (no taps) IR drop free
4. Rectifying element	Selenium bridge Selenium center tap Silicon bridge Silicon center tap
5. Circuit Type	Center type, single phase Bridge, single phase Three phase wye Three phase bridge Multiple output circuit
6. A.C. Input	115 volts 230 volts, single or 3 phase 460 volts, single or 3 phase 115/230 volts, 3 phase 230/460 volts, 3 phase 115/460 volts
7. D.C. Volts	Specify maximum D.C. output in volts
8. D.C. Amperes	Specify maximum D.C. output in amperes

9. Options	A.C. and D.C. lightning arrestors A.C. arrestor only Communications filter Efficiency fliter (choke) Meter switches Pilot light D.C. failure light D.C. fuse Painted cabinet Hot dipped galvanized cabinet Anodized aluminum cabinat Stainless steel cabinet Cabinet gauge - 16,14,12,11 Cabinet legs Cabinet side door Slide out racks High ambient operation Special taps Coolant - oil cooled units Non-standard access knockouts A.C. frequency - other than 60Hz Elasped time meter Convenience outlet

a. Rectifier Selection. The rectifier selected for a specific impressed current cathodic protection application must be matched to both the electrical requirements and the environmental conditions at the site. Rectifiers are available in many electrical types and specifically designed for use in impressed current cathodic protection systems in many environments. Figure 2-16 is a circuit diagram for a typical Single-phase full-wave bridge type rectifier showing the components found in most standard rectifiers of this type. The diagram also shows an external switch and circuit protection device which is mandatory for all DOD rectifier installations.

(1) Transformer. The transformer reduces the incoming alternating current voltage to the alternating current voltage required for the operation of the rectifying component. In most impressed current cathodic protection rectifiers, the voltage output from the secondary windings goes through a system of connecting bars or "taps". Two sets of taps are normally present, one for coarse adjustments and one for fine adjustments. By manipulation of these taps, the voltage should be adjustable to vary the rectifier voltage from zero, through at least 20 equal steps, to its maximum capacity.

(2) Rectifying elements. The alternating current from the secondary windings of the transformer element is converted to direct current by the rectifying elements or "stacks". The stack is an

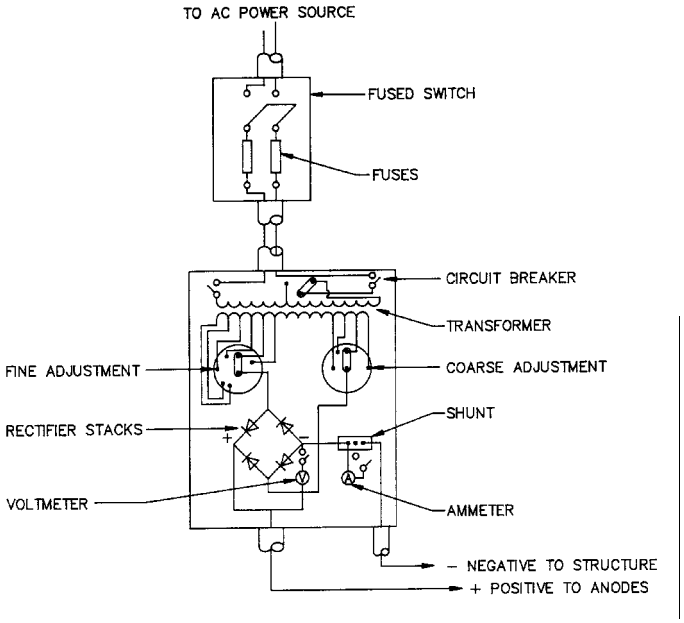

Figure 2-16

assembly of plates or diodes and may be in one of several configurations. The most common rectifying elements are selenium plate stacks and silicon diodes. Each has advantages and disadvantages. The most common configurations of rectifying elements are the single-phase bridge, single-phase center tap, three-phase bridge, and three-phase wye. These arrangements are described in detail in paragraph 2-10b. The rectifying elements allow current to flow in one direction only and produce a pulsating direct current. The rectifying elements do allow a small amount of alternating current to pass. This "ripple" is undesirable and should be held to low levels. Rectifiers are not 100 percent efficient in converting alternating current to direct current. This is due to the presence of alternating current and to inherent losses in the rectifying elements which result in heating of the stacks. Silicon elements are more efficient than selenium elements at high output voltages but are more susceptible to failure due to voltage overloads or surges. The efficiency of a rectifying element is calculated by the following equation:

$$\text{EQUATION: Efficiency (\%)} = \frac{\text{DC output power}}{\text{AC input power}} \times 100$$

Typical efficiencies of single-phase rectifying elements are in the order of 60 to 75 percent but can be increased by filtering the output or by using a three-phase circuit.

(3) Overload Protection. Overload protection in the form of either circuit breakers, fuses, or both should be used on all impressed current rectifiers. In addition to protecting the circuits from overloads, circuit breakers provide a convenient power switch for the unit. Circuit breakers are most commonly used on the alternating current input to the rectifiers and fuses are most commonly used on the direct current outputs. In addition to circuit breakers and fuses, the rectifier should be furnished with lightning arrestors on both the AC input and DC output in order to prevent damage from lightning strikes or other short duration power surges. The respective firing voltages of the lightning arrestors should be higher than the AC input and DC output voltage. Due to their susceptibility to damage from voltage surges, silicon diodes shall also be protected by selenium surge cells or resistors and by current limiting fuses against over-current surges. A high speed rectifier fuse should be installed in one leg of the AC secondary and one in the DC negative output leg for protection from electrical power surges, lightning strikes, etc.

(4) Meters. In order to conveniently measure the output current and potential, the rectifier should be furnished with meters for reading these values. The meter should not be continuously operating but should be switched into the circuit as required. This not only protects the meter from electrical damage from surges but, when the meter is read, it moves from zero to the indicated reading. Frozen meter movements are easily detected in this manner. Often, one meter and a two position switch are used to measure both potential and current. Current is usually measured using an external current shunt. Output voltage and current can also be conveniently measured by the use of portable meters used across the rectifier output and the current shunt. Rectifier meter readings should be frequently verified with portable meters.

b. Standard rectifier types.

(1) Single-Phase Bridge. The circuit for this type of rectifier is shown in figure 2-18. This type of rectifier is the most commonly used type of rectifier up to an output power of about 1,000 W. Above 1,000 W, the extra cost of three-phase types is often justified by the increased electrical efficiency of the three-phase units. The rectifying unit consists of four elements. If any one of the rectifying elements fails or changes resistance, the other elements usually fail. Current passes through pairs of the rectifying elements through the external load (structure and anode circuit). The active pair of elements alternates as the polarity of the alternating current reverses while the other pair blocks the flow of current.

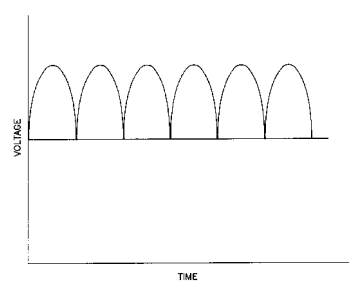

Figure 2-17

The result is full-wave rectified current as shown in figure 2-17.

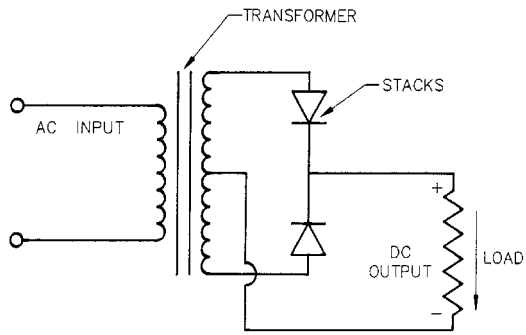

Figure 2-18

(2) Single-phase center tap. The circuit of a single-phase center tap rectifier is shown in figure 2-18. This type of rectifier has only two rectifying elements but produces full-wave rectified output. Since only one-half of the transformer output is applied to the load, the transformer required is considerably heavier and more costly than in single-phase bridge type units. This type of unit is also less sensitive to adjustment than the single-phase bridge type and is electrically more efficient.

(3) Three-phase bridge. The circuit for a three-phase bridge rectifier is shown in figure 2-19. The circuit operates like three combined single-phase bridge circuits that share a pair of diodes with one of the other three bridges. There are three secondary windings in the transformer that produce out-of-phase alternating current supplied to each pair of rectifying elements. This out-of-phase relationship produces a direct current output with less alternating current "ripple" than the single-phase type, only 4.5 percent. Due to the reduction in alternating current ripple, three-phase bridge rectifiers are more electrically efficient than the single-phase types, and the extra initial cost of the unit is often justified by savings in supplied power, particularly for units of over 1,000 W capacity.

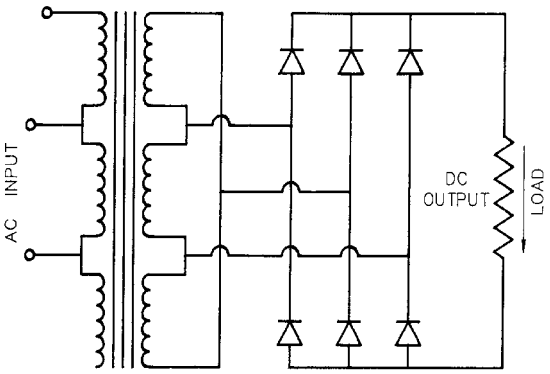

Figure 2-19

(4) Three-phase wye. The circuit for a three-phase wye rectifier is shown in figure 2-20. This type of rectifier supplies half-wave rectified current as shown in figure 2-21. The power to the rectifier unit is supplied by three separate windings on a transformer, but only three rectifying elements, each in series with the output, are provided. This type of rectifier unit is practical only for systems requiring low output voltages.

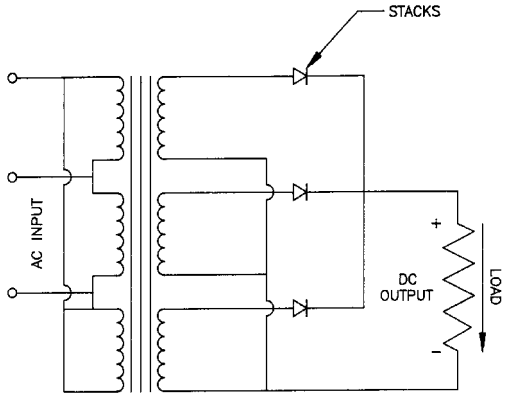

Figure 2-20

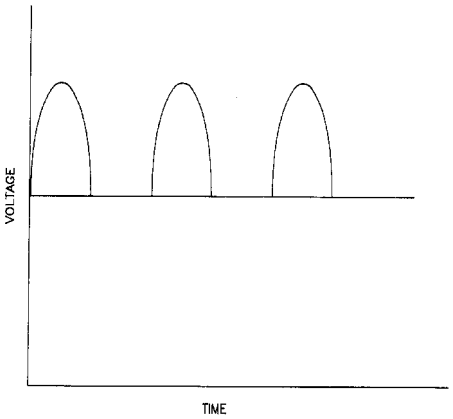

Figure 2-21

(5) Special rectifier types. Several special types of rectifiers, specifically designed for use in cathodic protection systems have been developed for special applications. Some special rectifiers provide automatic control of current to maintain a constant structure-to-electrolyte potential, others provide a constant current over varying external circuit resistances, or other features desirable in specific circumstances.

(a) A constant current rectifier is depicted by a block diagram in figure 2-22. A direct current input signal to the power amplifier is supplied from an adjustable resistor in the output circuit. The power amplifier uses this "feedback" signal to adjust the voltage supplied to the stack so that a constant input signal and, therefore, a constant output current are supplied. The power amplifier may either be of an electronic (silicon controlled rectifier) or saturable reactor type.

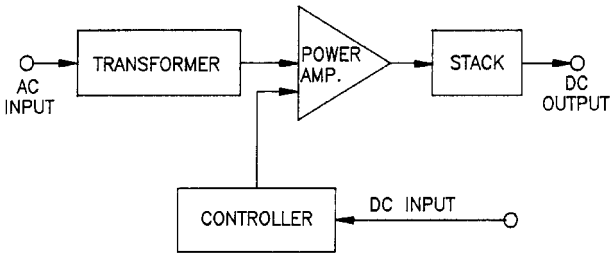

Figure 2-22

(b) An automatic potential control type is shown by a block diagram in figure 2-23. This type of unit uses the potential between the structure and a reference electrode to control the output current of the unit. As in the constant current type of rectifier, the power amplifier can be of the electronic or saturable reactor type. These rectifiers are commonly used where the current requirement or circuit resistance varies greatly with time such as in the case of structure in an area with high periodic tidal currents or a water storage tank where the water level changes considerably.

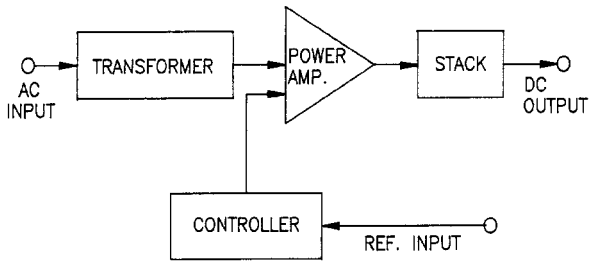

Figure 2-23

(c) Automatic control - IR drop free. The problems experienced in the water tank cathodic protection industry led, in the late 1970's, to the development of the IR Drop Free Rectifier Controller (Figure 2-24). This unit eliminates the IR Drop error, by taking the potential measurement with the current equal to zero. This is done by interrupting the current output from the rectifier unit. The reading taken immediately after the anode current is interrupted, called an "instant-off" reading, is commonly used in evaluating the performance of cathodic protection systems, and is recognized and defined in several NACE standards, including RP0388-88 "Impressed Current Cathodic Protection of Internal Surfaces of Steel Water Storage Tanks". This system requires one reference electrode installed at the wall of the tank, and a reliable automatic rectifier/controller. Several types of these units are available today. Several standardized rectifiers have been developed for commercial applications such as natural gas and electrical distribution system protection. The use of a standardized unit allows for economy of production and reduction in overall cost of the unit as well as the installation and maintenance of the unit. Where a large number of similar capacity units are to be used, the

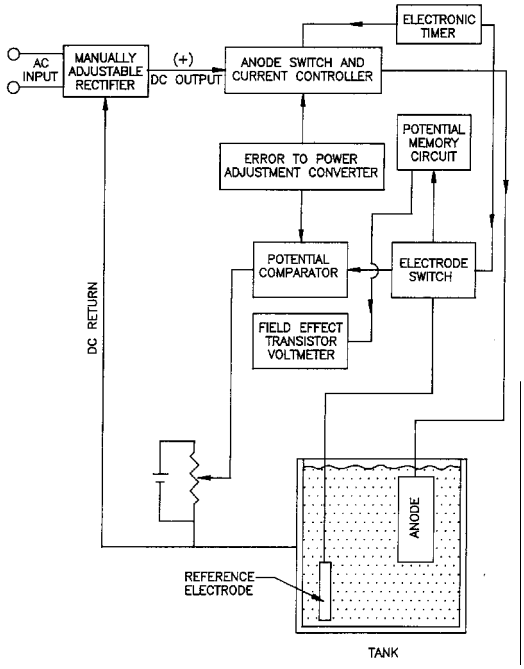

Figure 2-24

selection of a standardized type of rectifier should be considered.

(d) Air cooled versus oil immersed. Rectifiers can be supplied as either entirely air cooled, entirely oil immersed or with the stacks only oil immersed. Air-cooled units are lowest in cost and easiest to install and repair. However, oil-cooled units should be specified where corrosive or dirty atmospheric conditions are encountered or where explosive gasses may be present. The controls should not be immersed in the oil. Air-cooled units require more frequent maintenance to clean the air screens and other components and are also susceptible to damage by insects and other pests. Older oil-cooled units were supplied with oils containing polychlorinated biphenyls (PCBs) which have been determined to be carcinogenic and are no longer supplied with new units. Units containing PCBs should be treated according to current policy regarding PCBs.

(e) Explosion-proof rectifiers. Rectifiers and other system components such as switch and circuit breakers are available in explosion-proof enclosures conforming to Electrical Safety Standards for Class I Group D hazardous conditions that may be encountered in fuel or natural gas storage or distribution systems. Such enclosures should be specified wherever explosive hazards may exist.

2-11. Cable

One component that is a vital part of any cathodic protection system involves a metallic return path to complete the circuit. All systems use special cable to accomplish this function. Conductors typically used for underground service are made of solid or stranded copper, rated at 600 volts, with a variety of insulation materials designed for the type of electrical and chemical exposure to be encountered. Conductors are rated on their ampacity under certain temperature and service conditions. Insulation values also vary depending on wet or dry conditions. The following data is general in nature, covering the most common types, and specification data should be obtained directly from manufacturers pertaining to their products. On an impressed current cathodic protection system, a defect in the insulation exposing the conductors to the electrolyte will cause corrosion and eventual failure of the cable at the point of the defect. Table 2-9 lists the cable insulation types normally used for ICCP systems.

Table 2-9
Wire and Cable Insulation Designations

Designation	Insulation	Thickness (inches)	Cable Range	Specification
HMWPE	High Molecular Weight Polyethylene	0.110	#8 - #2	D-1248, Type 1
		0.125	#1 - 4/0	Class C, Cat. 5
PVF/HMWPE	Polyvinylidene HMWPE Jacket	(0.020") .085	#8 - #2	ASTM D257
		(0.065")		
ECTFE/HMWPE	Ethylene Chlorotri-Fluoroethylene HMWPE Jacket	(0.065")		

2-12. Backfill

Special carbonaceous backfill is used to surround most impressed current anodes in soil to reduce the groundbed resistance and extend the anode life. The only exception applies to anodes used in photovoltaic

power supply systems, where magnesium anode backfill is used due to the high back EMF voltage encountered with carbonaceous backfill. Coke breeze is conductive and transfers current from the anode to the interface of native soil. Some types pass the current more efficiently by more electronic conductance and others are less efficient and current passes electrolytically. The first type is metallurgical coke breeze, derived as a waste by-product of coking (heating) coal, associated with steel production. Like anodes, the composition and particle size of coke may greatly enhance the life of an anode and should be considered at the design stage.

a. Most often the particle size measures 0.375" (3/8) and smaller. The smaller the particle size, the greater the compaction and thereby the conductivity. The shape of the particles is irregular, which somewhat limits the degree of compaction. Metallurgical coke should not exceed 50 ohm-cm when measured using ASTM G-58 Soil Box Test Method, temperature corrected. The carbon, iron, copper, sulfur content and weight per cubic foot are important values to analyze prior to installation. Refer to table 2-10.

Table 2-10
Coke Breeze Composition

Type	Mesh* Size	Bulk Density (lb./cu.ft.)	Porosity (%)	Carbon (lb./cu.ft.)
Metallurgical Petroleum, calcined	3/16"	45	48.0	32.51
Delayed Fluid	48 x 200	48	59.5	47.76
	+4 x 16	54	56.7	49.93
	48 x 200	70	44.0	64.73
	48 x 200	74	40.8	68.43

* Defined as size passed through, versus that size in which 90% is retained on a U.S. Sieve screen

b. The second type of carbonaceous backfill is known as "calcined petroleum coke". Calcined petroleum coke consists of finely screened particles of coke that is typically derived as a waste by-product of crude oil refining. It is predominantly round carbon granules and is much more conductive than metallurgical grades of coke. The resistance should be less than 2 ohms, using ASTM G-58 Soil Box Test Method, temperature corrected. Since resistance values are low, high current density is less prone to gas generation, the incidence of gas blocking in deep anode groundbeds using a 92% carbon content coke is rare. Some grades incorporate a surfactant, similar to detergent, to reduce water tension and promote compaction in deep groundbeds.

2-13 Cable connections and splices

Most connections to structures are made with an exothermic welding process which thermally bonds the conductor to the structure. Other methods may change the temper of the conductors, thus becoming brittle, and damaging the insulating properties of the cable insulation. Exothermic welding (see Figure 2-3) uses a graphite mold to contain the mixture of copper alloy and magnesium starter powder. After igniting the powder with a flint gun, the powder becomes molten, and drops on the cable and structure. The remaining slag on the connection is removed by striking the weld with a hammer after cooling. Special attention should be given to coating any attachment or cable splice to prevent bimetallic corrosion attack in wet or buried conditions. The coating should be solvent free to prevent deterioration of the insulation. Structures that contain certain types of flammable substances may require the use of grounding clamps to make the cable attachment. Attaching the cables together may involve exothermic welding, high compression crimpets, or split bolts. Split bolts may loosen with age and are generally used only for magnesium anode header cable splices. Figure 2-25 shows the three methods. There are many methods available for moisture proofing

cable splices:

(1) Hand wrapping

(2) Epoxy mold encapsulation (Figure 2-26)

(3) Shrink tubing and sleeves

(4) Elastomer/urethane impregnated wrap

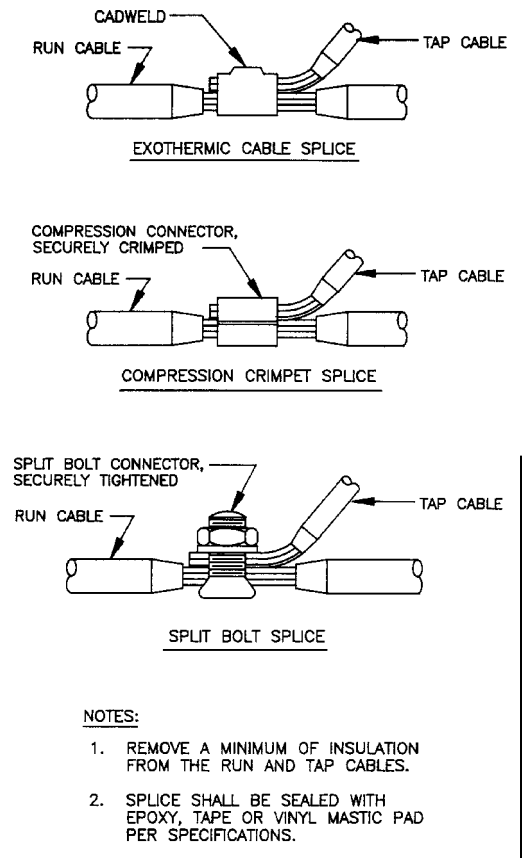

Figure 2-25

a. Hand wrapping has historically been the most reliable method if done properly, although it is also the most expensive, since more labor time is required. The exposed splice area is cleaned with a clean rag, dampened with solvent to remove release oil and human oil on the strands. The area is wrapped with 3 laps of electrical rubber insulating tape extending 2 inches on adjacent insulation, paying special attention to the crease area if wrapping a "Y" connection, as in an anode header cable splice. The entire area is then wrapped with 3 laps of PVC electrical tape to complete the splice.

b. Epoxy molds have been used extensively over the years with some mixed results. Epoxy doesn't bond to the release oils used on wire, permitting moisture to eventually travel into the connection. Since there is no chemical bond to polyethylene, the mold must extend far enough over the adjacent insulation to prevent hygroscopic moisture migration. Epoxy molds should not be disturbed or backfilled for 30 minutes, at 70 degrees F, so that the mold has time to set. Any movement will distort the material and reduce the adhesion. During cold weather, this time should be extended to approximately 3 hours at 32 degrees F.

c. Heat shrinkable tubing of irradiated polyethylene with an effective electrical sealant is used to repair in-line cable splices. This method has proven to be effective and inexpensive. Care must be taken when using a propane torch so as not to melt or distort the cable insulation while shrinking the sleeve.

d. Elastomer sealant kits are a recent development that involves wrapping a pliable strip of sealant around the splice area to moisture proof the connection. An outer wrap of elastic fabric, impregnated with a quick setting, moisture cured urethane, is wrapped around the sealant and sprayed with water to harden the fabric. This forms a hard shell to eliminate cold flow of the sealant and prevents rocks or soil stress from damaging the encapsulation.

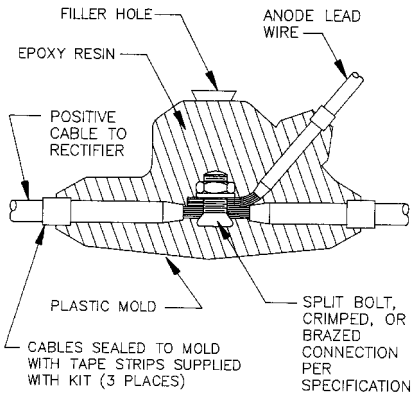

Figure 2-26

2-14 Test station

Test stations should be provided for structures protected by impressed current cathodic protection (ICCP) systems. Test stations of the type indicated in figures 4-20, 4-21, 4-22, 4-23 are typically utilized for ICCP systems. Generally, no test stations terminating galvanic anodes, of the type illustrated in figure 2-2, would be utilized as part of an ICCP system.

2-15 Insulating materials

In implementing ICCP systems, it is desirable to electrically isolate protected structures from unprotected structures, which can be tied into grounding systems, or other massive metallic structures. This is accomplished using the same insulating materials described in paragraph 2-5.

CHAPTER 3

CRITERIA FOR CATHODIC PROTECTION

Section 1. Introduction

3-1. Background

Various methods are available for determining whether the structure to be protected is being effectively protected through the application of cathodic protection. The technical basis for corrosion and cathodic protection is electrochemical. Electrochemical methods of determining the effectiveness of cathodic protection systems are the most widely used criteria for establishing the adequacy of the protection. In addition to electrochemical methods, inspections to determine the actual condition of the structure being protected can be used to determine whether or not effective protection has been achieved in the past. If there is no attack of the protected system in an aggressive environment, then the protective system has been functioning adequately. For buried or submerged systems where access is restricted, the electrochemical criteria are the most widely applied.

3-2. Protection Criteria

The primary organization issuing criteria for evaluation of the effectiveness of cathodic protection installed on various structures is the National Association of Corrosion Engineers (NACE). NACE has issued Technical Standards known as Recommended Practices for corrosion control. Contained in several of these Recommended Practices are electrical criteria to be used to evaluate the effectiveness of cathodic protection systems. The three standards which pertain most to the structures and systems in operation at Army installations are as follows:

Standard Number	Title
RP0169	Recommended Practice for Control of External Corrosion on Underground or Submerged Piping Systems
RP0285	Control of External Corrosion on Metallic Buried, Partially Buried or Submerged Liquid Storage Systems
RP0388	ImpressedCurrent Cathodic Protection of Internal Submerged Surfaces of Water Storage Tanks

For submerged and buried structures, criteria based upon the electrochemical potential of the surfaces of the structure to be protected are the most widely used criteria for determining whether or not the structure is being effectively protected. In making these electrochemical potential measurements, as shown in figure 3-1, a high impedance voltmeter is used to measure the difference in potential between the structure and a reference electrode placed in contact with the electrolyte. For buried structures, the copper/copper sulfate reference electrode is the reference electrode most commonly used for this purpose. For structures submerged in seawater, the silver/silver chloride reference electrode is commonly used. Other reference electrodes can be used when appropriate. Potential readings obtained using any given reference electrode can be related to readings obtained with other reference electrodes (see Table 3-1). In order to assure that the potential readings obtained are properly interpreted, the reference electrode used should always be noted. Readings should be reported as "XX.XX Volts versus a YYY" where YYY is the type of reference electrode used to measure the structure potential. As these potential measurements are most commonly used to measure the potential of buried pipelines, they are commonly called "pipe-to-soil potentials" even though they may refer to the wall of a water storage tank in contact with potable water. The more precise

term for these measurements is "structure-to-electrolyte potential". In order to determine whether or not a given surface is being adequately protected, structure-to-electrolyte potential measurements are taken at various locations surrounding the structure. Based upon a combination of corrosion theory, experimental and laboratory tests, and more importantly, upon actual field experience with a large number of protected structures, criteria for interpreting these structure-to-electrolyte potentials have been developed. Refer to the latest version of the appropraite Recommended Practice for more information on the use of these criteria. Chapter 4 provides details on proper data collection and interpreation for use with these criteria.

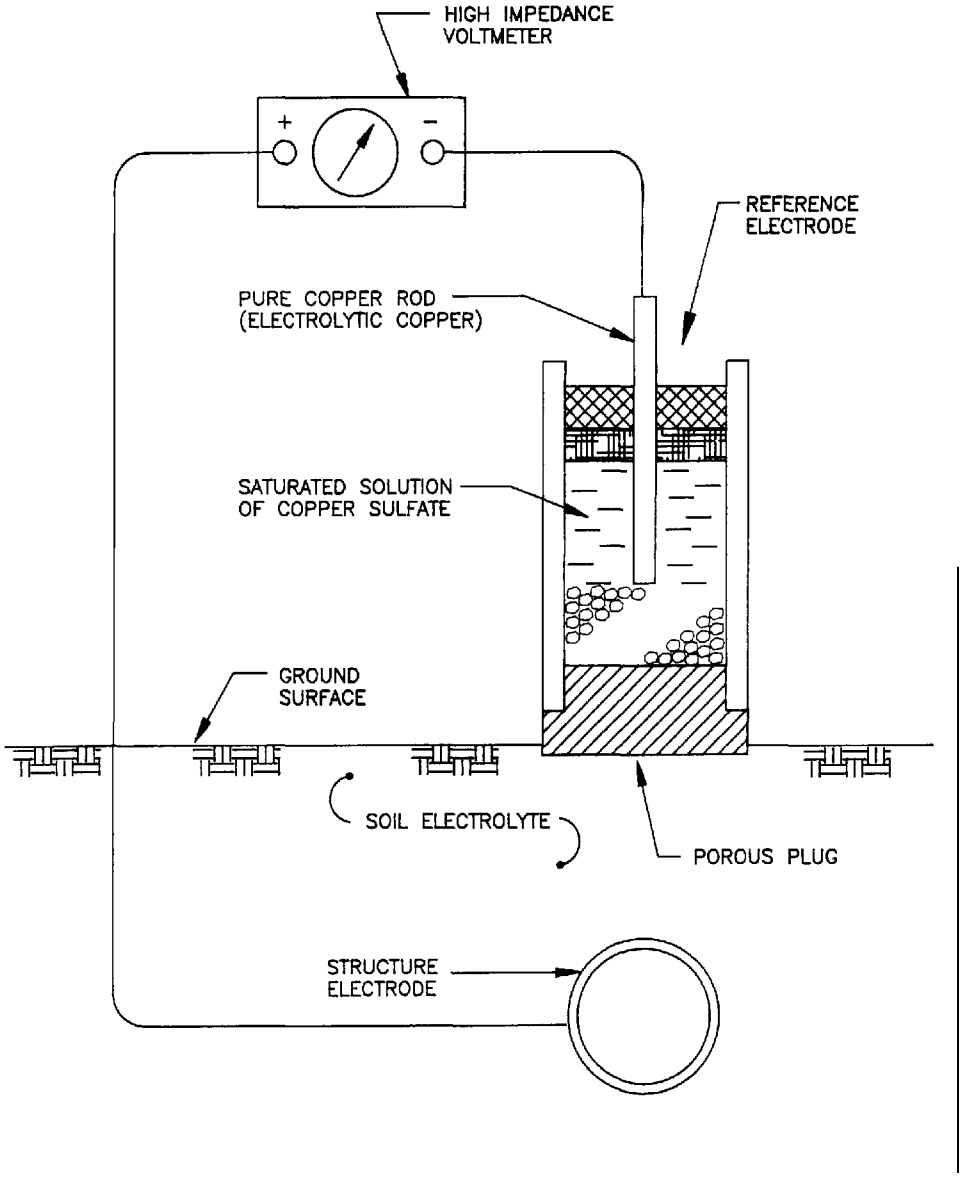

Figure 3-1

Table 3-1 Potential Criteria* for Various Standard Reference Electrodes	
Reference Electrode	Potential Criterion
Copper/Copper Sulfate	-850mV
Saturated Calomel	-780mV
Silver/Silver Chloride	-800mV
*Values are for steel and iron structures	

Section II. Other considerations

3-3. Failure rate analysis

Corrosion damage, as measured by frequency of system failure, usually increases logarithmically with time after the first occurrence of corrosion failure. When effective cathodic protection is applied to a structure which has experienced corrosion damage, the frequency of failures will be significantly reduced. However, due to the presence of existing corrosion damage, the failure rate will not immediately be reduced to zero. Mechanical damage and previously undetected corrosion related damage may still result in failure, but if effective cathodic protection is achieved, corrosion failures should cease after a period of 1 or 2 years. Accurate failure records should be kept for both protected and unprotected systems in order to determine the need for cathodic protection and the effectiveness of installed systems. A typical failure rate analysis is shown in figure 3-2.

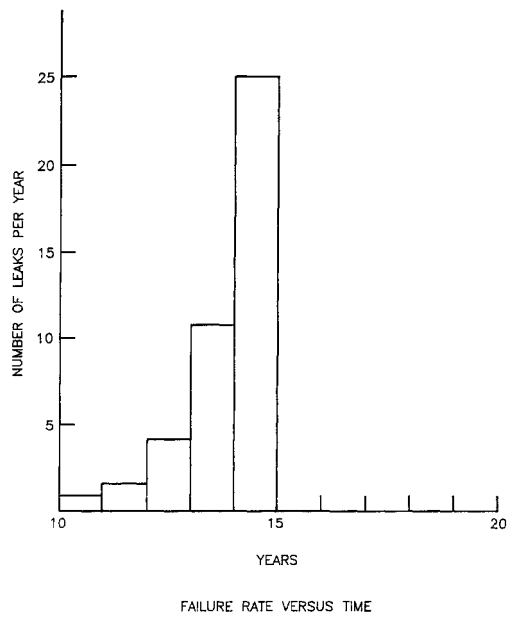

Figure 3-2

3-4. Nondestructive testing of facility

Periodic evaluation of the condition of the protected system can be used to determine the adequacy of the cathodic protection system installed on the structure, or to establish the need for protection.

a. Visual analysis - If the surface of a structure is accessible or is exposed for repairs, alterations, or specifically for the purposes of inspection, visual inspection may be used to evaluate the need for protection or the effectiveness of cathodic protection applied to the structure. Signs of corrosion such as the presence of corrosion products, pitting, cracking, reduction in physical size, or other evidence of deterioration should be noted. A variation of visual inspection is the installation of small metal samples, or coupons, electrically connected to the structure at various critical points on the structure. Periodic removal and evaluation of these samples, including visual observation and weight loss measurements, can be used to infer the corrosion activity affecting the structure being monitored.

3-5. Consequences of underprotection

If the measured potentials of a structure are not as negative as required by one or more of the applicable criteria for cathodic protection, some corrosion of the structure may occur. However, the corrosion of the structure will be reduced in proportion to the amount of current supplied. When only parts of the structure do not reach the desired criteria, those areas will corrode at a rate inversely proportional to the current they receive. When partial protection occurs, corrosion is reduced in those areas receiving partial protection but is not totally stopped. When protective currents are totally interrupted, corrosion will usually return to a normal rate after a short period of time.

3-6. Consequences of overprotection

In addition to being wasteful of anode material or electrical power, excess potentials can cause disbondment of protective coatings and can cause hydrogen embrittlement of certain types of steels, especially high strength steels.

a. Coating disbondment - Excess cathodic protection potentials can result in the generation of hydrogen gas. When the cathodic protection potential reaches the polarized (instant-off) potential of -1.12 V , with respect to a copper/copper sulfate reference electrode, the generation of hydrogen gas will occur. When hydrogen gas is generated, it is often trapped between the coating and the surface and causes blisters and disbonding of the coating. Electrolyte can subsequently fill the gap between the coating and the metal and, as the coating is an electrical insulator, sufficient current will occur. Coating disbondment is a particular problem in water tanks, where potentials should not be more negative than -1.1V. In soil environments when high quality coatings are used, disbondment is seldom encountered at potentials less negative than -1.6 V (current on) or -1.12V polarized (instant-off) potential.

b. Hydrogen embrittlement - The hydrogen produced when cathodic protection currents are excessive can also result in the reduction of the ductility of steel. This is particularly true for high strength steels (in excess of 130,000 pounds per square inch (psi) yield strength).

CHAPTER 4

TEST EQUIPMENT AND FIELD MEASUREMENTS

Section I. General information

4-1. Basic approach

The proper operation and maintenance of any cathodic protection system requires that certain electrical measurements be made in the field. These measurements serve two purposes:

a. They tell whether the system is functioning as it was designed to function and whether it is providing adequate protection.

b. They disclose both sudden and long term changes in electrical flow through the system in order to furnish clues to the physical state of anodes, operating condition of rectifiers, and changes in the electrical characteristics of the protected and nearby structures.

Section II. Types of measurements

The basic types of electrical measurements made are measurements of potential or voltage (volts), current (amps), resistance (ohms), and resistivity (ohm-cm).

4-2. Potential measurements

Measurements of potential are made to determine the effectiveness of the cathodic protection system. Three types of measurements are made: Direct measurement of applied voltage (across the output terminals of a rectifier), structure-to-electrolyte potential measurements, and structure-to-structure potential measurements. Structure-to-electrolyte potentials are often unknown to operating personnel. An understanding of the electrical principles involved is necessary to make sure that the measurements are accurate and furnish a true picture of conditions as they actually exist. Structure-to-soil potential of a buried pipeline is determined by measuring the voltage with a standard copper-copper sulfate half cell. The measured potential is said to be "referred to a copper-copper sulfate half cell". (Other types of half cells are available, however, in actual practice, they are almost never used.) Figure 4-1 illustrates this measurement.

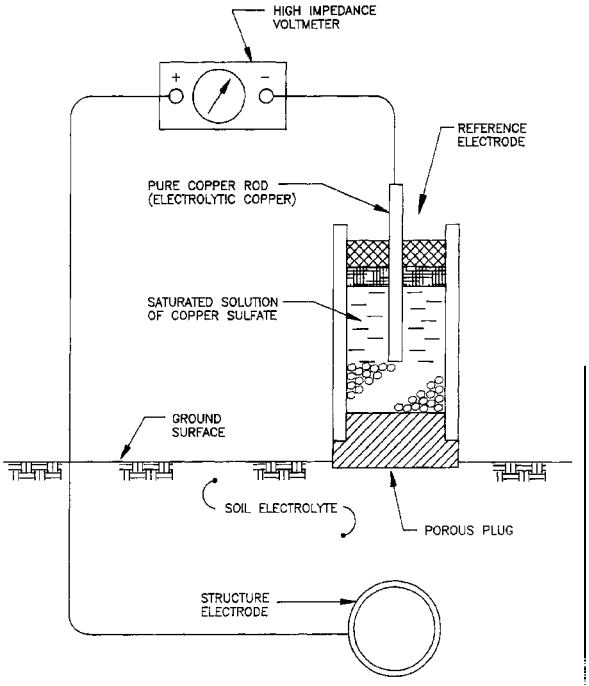

Figure 4-1

4-3. Current measurements

The measurement of current output is used to determine the operating condition of anodes and rectifiers and to make sure that sufficient current is being applied to the protected structure. Figure 4-2a shows the method of measuring galvanic anode

current output using a milliammeter placed in series with the anode wire and the structure wire. Figure 4-2b shows the method of measuring galvanic anode current output using a millivolt meter placed in parallel with a calibrated shunt. Figure 4-3 depicts the method of measuring rectifier current using an ammeter in series with the D.C. wiring entering the rectifier. This measurement can be made by opening either the positive (anode) lead or the negative (structure) lead. Figure 4-4 illustrates the measurement of the current output of the rectifier by measuring the voltage drop across the panel shunt, using a millivoltmeter.

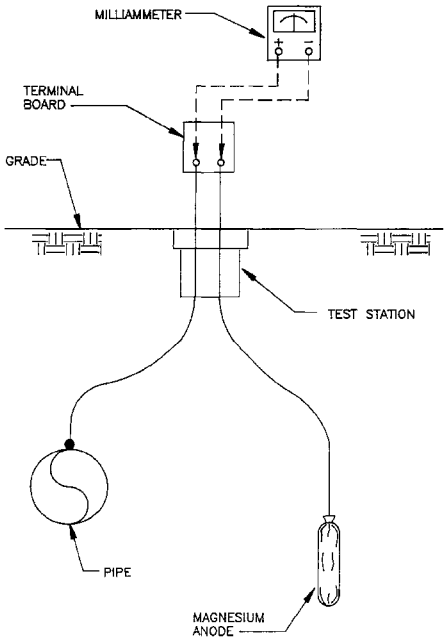

Figure 4-2a

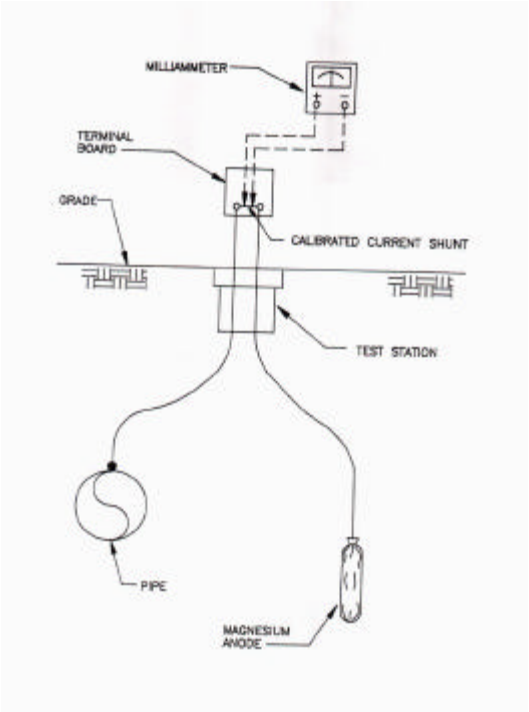

Figure 4-2b

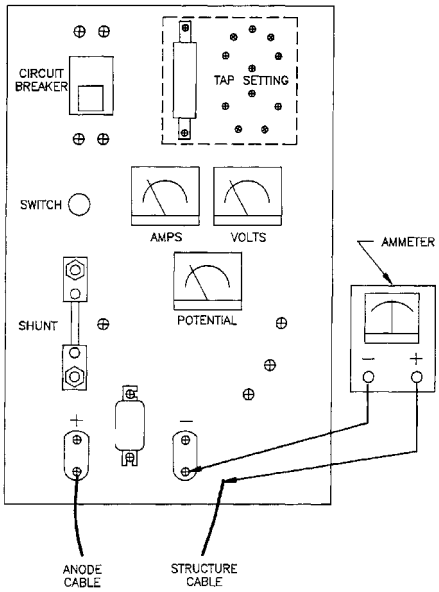

Figure 4-3

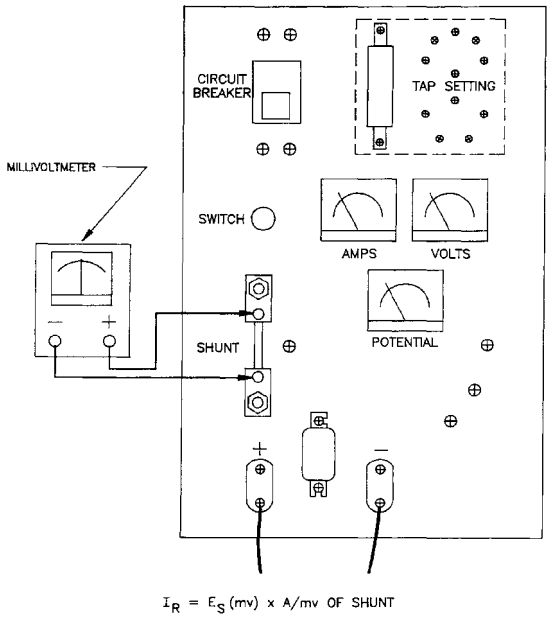

Figure 4-4

4-4. Resistance and resistivity measurements

The ability of soil or water to conduct electricity is closely related to the rate at which buried or immersed structures will corrode. The lower the resistance to current flow the higher the rate of corrosion. The practical measure of the ability of a material to resist the flow of electricity is known as resistivity. Resistivity is defined as the resistance in ohms between opposite faces of a l-centimeter cube of material.

a. Soil resistivity is found by measuring the current flow through a specified section of earth, determining the voltage drop across all or part of the earth under test and using these measured values to calculate the resistivity by formula. Figure 4-5 shows the basic circuit used for this determination. The resistivity (P) is calculated from the formula:

$$P = \frac{191.5\ AE}{I}$$

where: P = resistivity in ohm-centimeters
A = pin spacing in feet
E = voltage drop between pins in volts
I = current flow in amperes

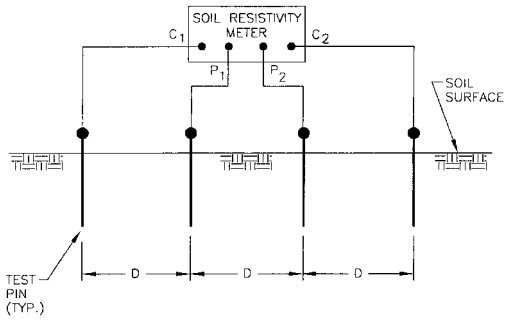

(4) PIN SOIL RESISTIVITY MEASUREMENT

Figure 4-5

This calculation will give the average soil resistivity down to a depth about equal to the pin spacing. By changing the pin spacing, the resistivity to other depths can be determined.

b. Polarization and galvanic effects between the electrodes may cause errors in the calculated resistivity when only one DC measurement is made. These effects may be eliminated by reversing the DC leads and averaging the results, or by using AC measuring equipment. Commercial earth resistivity meters use AC for this reason.

c. Soil box resistivity of environment. Resistivity of a sample of soil or water may be measured by a four-terminal soil box as shown in figure 4-6. A direct current source is connected to the current terminals, and a voltmeter is connected to the potential terminals. Measured current is passed through the sample and the resulting voltage drop is read across the potential pins. Box dimensions are such that no multiplying factor is required to determine the resistivity. Potential change in millivolts, divided by current milliamperes, gives resistance in ohms, which for the soil box is numerically equal to resistivity in ohm-centimeters. The equation is:

$$P = \frac{R\,(WD)}{L}$$

W, D, L in centimeters
R = resistance
P = resistivity
P1, P2 = potential connections
C1, C2 = current connections

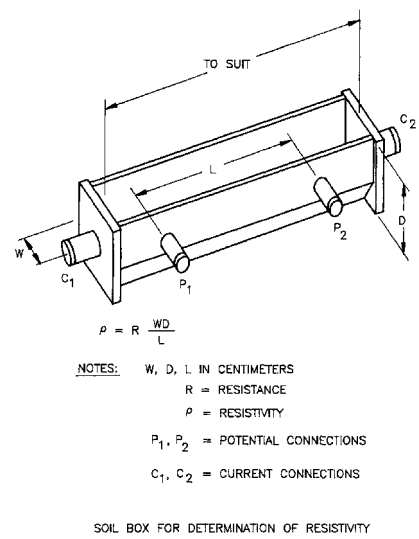

Figure 4-6

(1) The measurement should be made as quickly as possible after current is turned on to keep polarization of soil box electrodes as low as possible. The soil box can be used with a four-terminal alternating current soil resistivity meter to eliminate polarization effects.

(2) Resistivity readings taken at the site are generally preferred over soil box measurements. Soil removed from the site and tamped into a soil box may take on different characteristics of compaction, moisture, and so on. However, where field measurements are not possible or practical, the soil box may be used. For determining water resistivity, the soil box is most practical. Also, because water is relatively homogeneous, soil box readings for water samples are generally very accurate.

d. Water resistivity is usually determined by calculation from its inverse characteristic, conductivity. Conductivity is the ability of a material to conduct electricity and is numerically equal to the reciprocal of the resistivity. The basic unit of conductivity is mhos per centimeter, but most water analyses report conductivity in millionths of mhos, (or micromhos) per centimeter.

e. The calculation of resistivity from a known value of conductivity is a simple one.

For example: Assume a water with a reported conductivity of 200 micromhos/cm (.000200 mho/cm).

$$Rw = 1/C = 1/0.0002 = 5{,}000$$

Where:
Rw = Resistivity (ohm/cm)
C = Conductivity (mho/cm)

Section III. Types of surveys

4-5. Pipe-to-soil potential surveys

a. Corrosion detection. Pipe-to-soil readings may be used at various stages in the corrosion evaluation process. They are used to determine the corrosiveness of the environment, since potential measurements, coupled with other types of measurements, are indicative of the corrosion activity taking place on a structure. This is accomplished by taking "native" or "as-found" potential measurements before any cathodic protection current has been applied. These data will indicate the electrical characteristics exhibited by the pipe or structure in its natural state. Thus, any corrosion proceeding will be indicated by specific patterns of pipe-to-soil potentials at various points along the structure. Figure 4-7 shows a typical pipe-to-soil potential profile on a pipe which is experiencing corrosion activity. By taking profiles over, and a fixed distance lateral to the pipe being studied, the corrosion mechanism which is affecting the pipe can be determined, provided there are no other unusual factors affecting the situation. In general, anodic areas (areas of active corrosion) are at the locations where the over-the-pipe potentials are more negative than the cathodic areas. In cases of interference from other protected structures, or bi-metallic action, other potential patterns will be observed. For the purposes of distinguishing the type of corrosion activity which is present, these general rules can be followed:

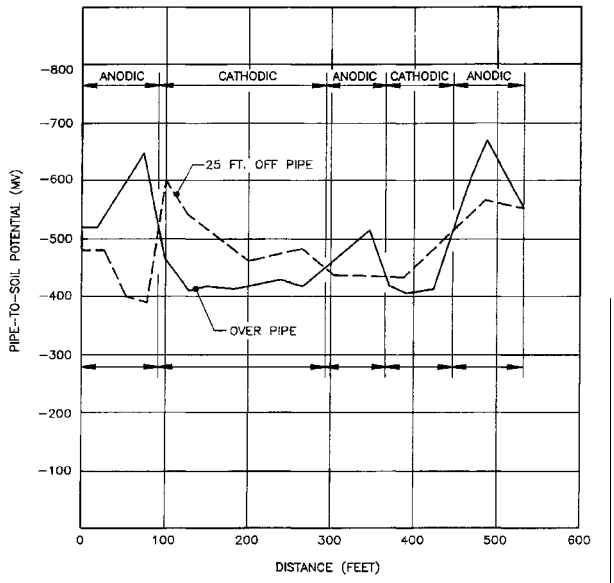

Figure 4-7

(1) Anodic areas exist at locations where the lateral measurements are less negative than the "over-the-pipe" measurements. Conversely, cathodic areas exist at locations where the lateral measurements are more negative than the "over-the-pipe" measurements. This condition always holds, irrespective of whether the corrosion activity is a result of electrolytic or galvanic action.

(2) When anodic areas coincide with areas of high negative potential the corrosion activity is one of "straight-forward" galvanic action (this does not include bi-metallic activity). In a straight-forward galvanic situation, the more negative the potential, the more anodic the area.

(3) When anodic areas coincide with areas of low negative potentials (or in severe cases positive potentials), the corrosion activity is one of either electrolytic action or bi-metallic coupling. In an electrolytic or bi-metallic situation, the less negative (or more positive) the potential, the more anodic the area.

(4) It has been seen, from the study of basic corrosion theory, that corrosion takes place at the anodic areas on the structure. This is due to the flow of current from these anodic areas to the cathodic areas. The severity of the corrosion is determined by the potential difference between the two areas, the ratio of the areas, and the circuit resistance of the current path. Thus, information relative to the degree of corrosion taking place, as well as the locations of corrosion activity, can be determined by a survey of this type. It should be noted, however, that several factors have to be taken into consideration before a valid interpretation of this type of survey can be made. Some of these factors are:

(a) Age of the pipe (or structure).

(b) Type of coating.

(c) Size of the pipe (or structure).

(d) The presence of laterals, valves, and other structures which may influence the readings.

(e) Location or existence of insulating fittings or other deliberate or inadvertent discontinuities in the piping.

(f) The existence of outside sources of stray D.C. current or adjacent protected structures.

(g) Soil resistivities along the route of the pipe.

A pipe-to-soil potential survey is normally used in conjunction with other types of corrosion surveys to gain data necessary to decide whether or not cathodic protection is called for and how severe the corrosion situation is. These surveys are:

(a) Line current survey - measurement of electrical current flowing on the pipeline.

(b) Measurement of the electrical resistivity of the environment.

(c) Determination of the alkalinity or acidity of the environment.

(d) Determination of conditions suitable for anaerobic bacterial corrosion.

b. Effectiveness of cathodic protection. Pipe-to-soil potential surveys are also used after installation of cathodic protection systems, to verify that protection criteria are met at all points along the structure. These measurements are taken at regular intervals along the structure to be measured.

4-6. Tank-to-water potential surveys

a. "Native" potential surveys. These surveys are not generally used to detect corrosion occurring at points on a water tank interior, but serve as a baseline to assist in evaluating cathodic protection system performance. For example, on bare or poorly coated structures, it may be difficult to attain a certain energized potential level, and protection may have to be verified by analyzing polarization effects as described in later paragraphs.

b. Energized Potential Surveys. These surveys are used to determine the potential levels achieved at various locations around the circumference of the tank due to operation of the cathodic protection system. This usually involves taking a potential measurement at each location with the system energized and then de-energized. The de-energized or "instant-off" reading can be compared to the "native" potential to determine the amount of cathodic polarization which has occurred during the course of operation of the system. A sufficient number of measurements must be taken to establish protection at all locations.

4-7. Underground tank-to-soil potential surveys

a. "Native" potential surveys. Just as the case for water storage tanks, these surveys are used to obtain baseline data against which energized potential values can be compared to determine the effectiveness of the cathodic protection system. Measurements are taken at selected locations (typically at 8-10 locations around the tank) prior to application of cathodic protection.

b. Energized potential surveys. As for the water storage tanks, these surveys are performed once the cathodic protection system is energized. Potential measurements are recorded at each location where the "native" potentials were measured, both with the system energized and de-energized, so that the "instant-off" potential can be compared to the "native" potential at each location.

4-8. Soil resistivity surveys

The soil resistivity measurements can be used to indicate areas of potential corrosion activity. The lower the soil resistivity, the more current will flow from the anodic areas to the cathodic areas, and the resulting corrosion rate will be higher. In addition to the higher corrosion rate associated with uniformly lower soil resistivity, localized, accelerated corrosion can occur if soil resistivity varies from higher to lower values in a short distance. Soil resistivity readings taken along a pipeline can be plotted as above with resistivity on the vertical axis and distance on the horizontal axis. The low dips will indicate the most corrosive soil where severe corrosion and leaks are likely to occur and the high peaks will indicate the least corrosive soil. There is not always a good correlation between resistivity and severity of corrosion. In some areas with extremely high soil resistivity, normally felt to be non-corrosive, structures have failed due to corrosion caused by variations in water level, chlorides, and other soil components. Therefore, resistivity values by themselves cannot be used as a true indicator of corrosion activity. The soil resistivity measurements do have other uses. The soil resistivity is important information used when designing cathodic protection systems, namely selecting the sizes of galvanic anodes or the location best suited for an impressed current anode groundbed.

4-9. "Short" locating surveys

This type of survey is actually a systematic method of locating shorts on a piping system, whether due to shorted or missing dielectric insulators, or unintentional contacts to foreign structures. The normal technique in locating major contacts, shorted insulators, or open couplings on coated pipeline systems is to apply an audio frequency signal between the coated pipeline and a good earth ground. Measurements over the pipeline are made by walking over the pipeline with an inductor in the form of a coil, a suitable audio receiver and ear phones. A short is identified if a rapid drop in audio is noted, while readings are taken away from the audio generator. This method means that a rather large difference in audio signal level has to be observed. Further differences in audio signal can occur from interference from other pipelines in close proximity to the coated system, all of which can contribute to inaccuracies in locating the electrical contacts or open couplings. An improvement in the method just described can be made with substantially the same equipment and which enables the operator to locate the actual point of contact with a greater degree of accuracy and a considerable saving of time. This method does, however, require that audio energy of from 5 to 10 watts be available to apply to the coated pipe system. This electrical field can be intercepted and measured by placing an inductance coil in the same plane as the pipe. As the coil is moved back and forth at right angles to the pipe, the field is cancelled directly over the pipe and a null effect will be noted as long as a large amount of audio current is flowing in the pipeline. Using this null method, it is possible to follow the pipeline while a relatively large amount of audio current is flowing along it. The new method looks for disturbances in the null rather than maximum signal strength and, therefore, gives a sharper indication of the location of the electrical contact. If the coated pipe is in contact with a foreign system which is grounded, the audio current will leave the pipe at this point and audio current will flow along the foreign system. The same null effect will then be present on the foreign system as on the coated pipe between the audio oscillator and the point of contact. If the traverse is continued beyond the point of the "short", it will be noted that the volume of the audio signal has decreased significantly, and the volume control on the receiver may have to be advanced. About three (3) or four (4) shorted conditions in a piping distribution system, will so deplete the audio signal as to render any further surveying useless, until the detected "shorts" are repaired.

Section IV. Instruments and Equipment

4-10. Measurement principles and requirements

The electrical measuring instruments used in cathodic protection testing are usually just variations of commonly used test instruments. Cathodic protection systems are characterized by relatively low voltages and high current flows which means that the system, as a whole, has a low resistance. Under those conditions, the insertion of an electrical instrument into the system can alter it enough to change the electrical measurement itself. For example, assume a sacrificial anode has a potential, with respect to the protected structure, of 1.5 volts and a total cell resistance of 2 ohms. Ohm's law indicates:

$$I = E/R = 1.5/2 = 0.75 \text{ ampere}$$

If an ammeter having a resistance of even 1 ohm is inserted into the system, the resistance seen by the cell is increased a full 50 percent. Again, applying Ohm's law:

$$I = E/R = 1.5/3 = 0.50 \text{ ampere}$$

Therefore, while the actual current flow from the structure to the anode is 0.75 ampere, simply placing the meter in the circuit has changed the circuit and reduced the current flow enough to make the meter read only two-thirds of the actual current flow. It is apparent then, that an ideal ammeter would have no resistance. Conversely, the nature of voltmeters and voltage measurements is such that the ideal voltmeter would have an infinite resistance. The instruments in use today are primarily solid state, with very low or zero apparent resistance on the current ranges, and extremely high input impedance (usually 10 megohms) on the voltage ranges.

4-11. Ammeters

The term "ammeter" includes all current measuring meters used in cathodic protection, including microammeters and milliammeters. The ammeter, as used in the field, is a voltmeter with a calibrated resistor, known as a shunt, assembled in one unit. Electrically, the unit is as shown in figure 4-8 where Rc is the internal resistance of the meter movement and Rsh is the resistance of the shunt. When measuring a current that is greater than the capacity of an ammeter, an external shunt and a high-resistance voltmeter should be used. The voltmeter leads should be connected to the shunt to measure the voltage drop caused by current flow through the shunt.

4-12. Voltmeters

The early voltmeter consisted of a galvanometer connected in series with a resistor as shown in figure 4-9. The galvanometer measures the current flowing through the meter circuit. As long as the resistance of the meter circuit (Rc + Rs) was known and the current was determined by the meter, the voltage across the meter terminals could be calculated using Ohm's law (E =IR). Other voltmeters used more recently were potentiometer-voltmeters which compared an internal source voltage to the voltage being measured, using a galvanometer to determine the point of exact balance (zero current) and a

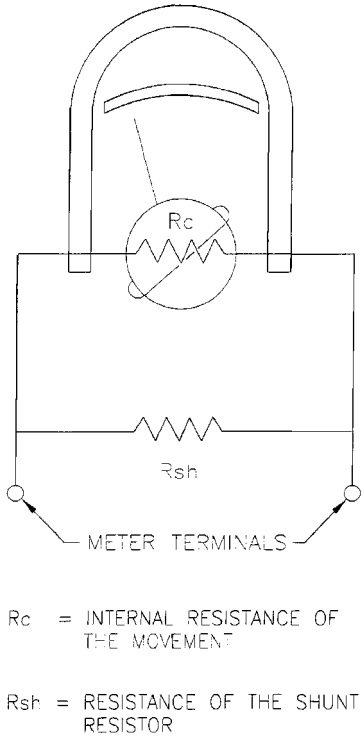

Figure 4-8

voltmeter to measure the balancing voltage. The circuit diagram for this meter is shown in figure 4-10. Figure 4-11 illustrates typical high impedance solid state digital voltmeters used today by most corrosion engineers.

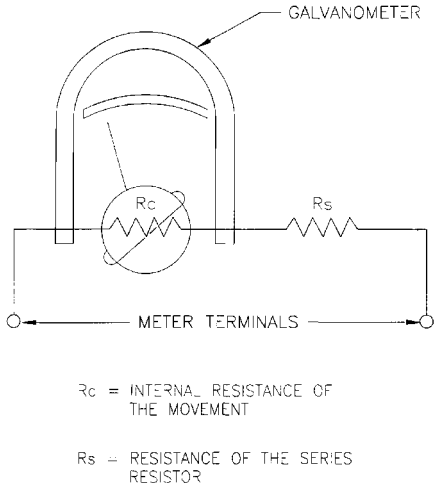

Figure 4-9

4-13. Earth resistivity meter

The earth resistivity meter is a device for determining soil resistivity directly without complicated calculations. The instrument uses the rule discussed in paragraph 4-4a. and reads either in ohms or in a fraction (one-tenth, one-hundredth, etc.) of the actual value.

a .

The most commonly used earth resistivity meter is shown in figure 4-12. This is an AC instrument using an oscillator circuit and transformer to convert battery supplied DC to AC. This instrument passes an AC from terminals C1 and C2 through the earth.

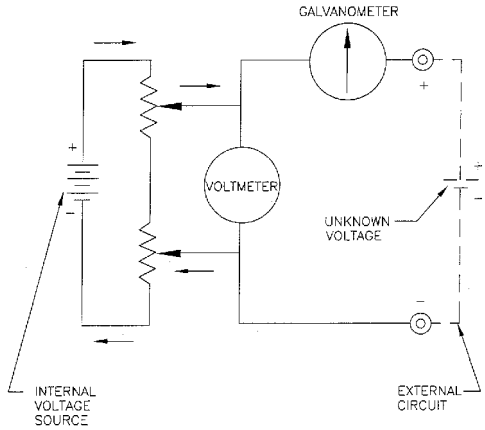

Figure 4-10

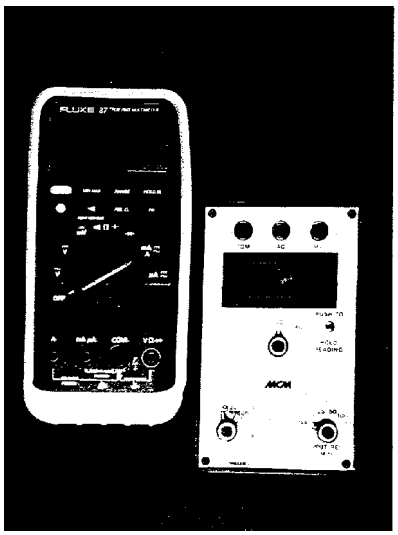

Figure 4-11

b. The potential or IR (current times resistance) drop is measured between terminals P1 and P2. The potentiometer is calibrated to read directly in ohms, and use of the formula shown in paragraph 4-4a. will give the soil resistivity in ohm-centimeters.

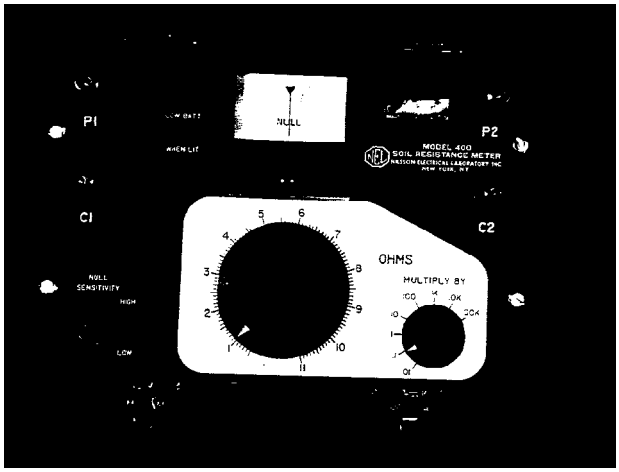

Figure 4-12

4-14. Pipe and cable locators

Pipe and cable locators are electronic instruments which can locate buried metallic structures. Two systems are used, inductive and conductive, both of which use a transmitter and receiver combination.

a. Inductive type. In the inductive system (illustrated in Figure 4-13), the operator moves both the transmitter and receiver over the surface of the ground. The transmitter radiates energy (similar to a radio transmitter) into the ground, and the receiver detects disturbances in the pattern of energy caused by metallic structures in the soil.

Figure 4-13

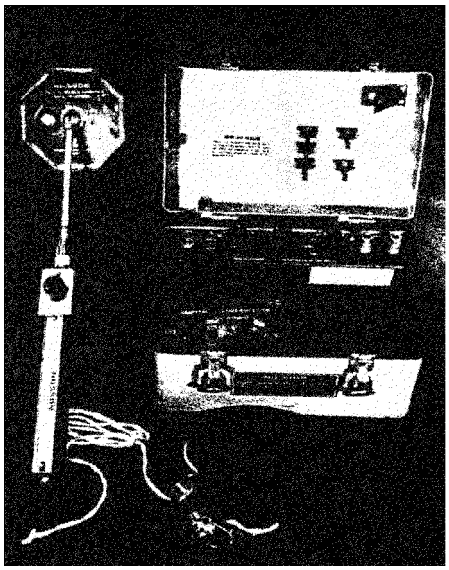
Figure 4-14

b. Conductive type. In the conductive system (illustrated in Figure 4-14), the transmitter is connected to the structure being traced, and the receiver alone is moved over the ground surface. In this situation, the receiver picks up the signal being transmitted through the structure itself.

c. Inductive operation is used where only one structure is being traced or where no part of the structure is available for electrical connection to the transmitter. Conductive operation is used where several structures are buried and it is necessary to trace the location of one specific structure. For example, if it is necessary to locate a water main in an isolated area, and no other buried structures are near, inductive operation should be used. If it is necessary to trace the location of a gas main in an area where water lines, communication cables, and even petroleum oils and lubricants (POL) lines are also located, it is better to use conductive operation to avoid picking up the wrong pipe where lines cross or run together.

d. If the systems are electrically connected, either deliberately as a cathodic protection measure or accidentally where they cross, or are connected to the same appliance, even conductive operation will not allow one system to be distinguished from the other.

4-15. Reference cells

The standard reference electrode for cathodic protection work is the copper-copper sulfate half cell.

a. There are several types of copper-copper sulfate half cells in use, differing in construction details only. The most common type is shown in figure 4-15. The copper electrode is immersed in the copper sulfate electrolyte and the electrical connection is made by clipping on to the threaded portion of the copper rod.

b. To reduce evaporation of the electrolyte solution, the porous plug of the cell is covered with a removable rubber cap when the cell is not in use.

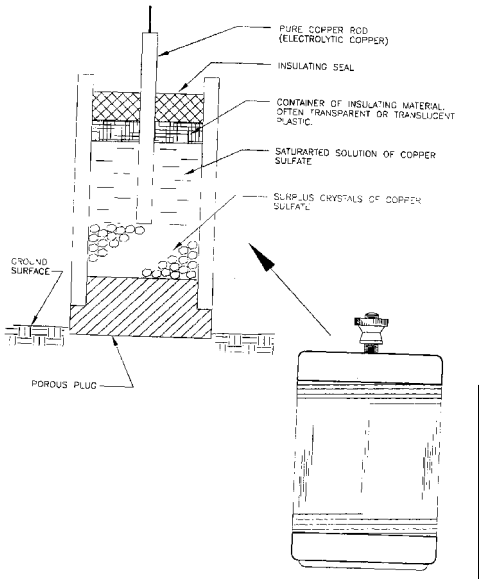

Figure 4-15

Section V. Field testing procedures

4-16. General

Field measurements of potential, current, and resistivity provide the information needed to determine the actual operating condition of a cathodic protection system or to determine if cathodic protection is needed on an unprotected system. Measurement of the rectifier output (both voltage and current) is a familiar procedure. However, the actual techniques of measuring structure-to-electrolyte and anode-to-electrolyte potentials and anode-to-structure currents, using test stations and soil resistivities are not so familiar.

4-17. Structure-to-electrolyte potentials

The structure-to-electrolyte potential is one of the most important measurements made in cathodic protection. The basic arrangement of components is shown in figure 4-1. The positive terminal of a voltmeter is connected to the structure and the negative terminal to the electrode of a copper-copper sulfate reference electrode. The potential is indicated by the voltmeter. This potential value will tell the operator whether the structure is adequately protected at the point of test. Criteria for adequate protection are detailed in chapter 3. Any sudden changes in potential indicate either some outside influence (such as stray current) or a change or failure in the cathodic protection system.

a. It is important to make sure that good contact is obtained between the components of the circuit. Any high resistance connection will cause erroneous readings to be taken. The operator must be certain that the porous plug of the reference electrode is in contact with moist earth (or water in a tank), and that a solid metal-to-metal contact is made between the structure and the test lead to the voltmeter. With soil electrolytes, it may be necessary to scrape down to moist earth or even to dampen the soil with water. Test prods or clips should be wiggled on the metal surface to penetrate any dirt or oxide coatings. In survey work, it is desirable that structure-to-soil readings be taken with the reference electrode directly over the structure to be tested.

b. Connection to buried structures being tested is sometimes difficult. A list of possible points of electrical contact are:

(1) Cathodic protection test stations

(2) Water or fuel hydrants

(3) Exposed service entrances

(4) Meter installations

(5) Valve installations

c. It is also important to be sure that the electrical contact is properly made to the structure. Two common causes of trouble are making contact to the pipeline on the wrong side of an insulated bushing or union or to a valve stem which is insulated from the valve or body by packing or sealing materials.

d. Sometimes it is necessary to make contact with a buried structure at a point where there is no exposed place of connection. If it can be absolutely determined that the structure is bare, contact may be made by probing down with a steel bar. Under no circumstances should coating be damaged by steel bar probing. Electrical contact with exposed structures such as tanks, sheet piling, or exposed pipelines poses no difficulties, but good metal-to-metal contact must be assured.

e. Where two structure wires are available, always use the wire that is not carrying current.

f. When testing underground storage tanks, connection should be made at several locations to verify the continuity between the components of the storage system (e.g. tanks, fill risers, product supply & return lines, vent lines, etc.). To verify continuity, place a reference electrode in a stationary position, and measure the potential between it and the various components listed above. If the potentials on each component are identical, electrical continuity is indicated. Note: Some storage tanks are intentionally electrically isolated from the piping connected to them. For these tanks, a test of each system component must be made separately. Connection to the tank in this situation must be made by connecting to a test wire which is connected to the tank, or if this does not exist, the connection must be made to the interior of the tank by lowering a probe into the fill box and contacting the floor of the tank.

g. When measuring potentials on the interior of an above ground water storage tank, the connection to the water tank can be made at any location convenient to where the test instrument is located. For example, if the tester is working at the manway in the roof of the tank, the connection to the structure can be made to any metallic component of the tank which is physically connected (e.g. welded) to the tank, such as a hatchway bracket, a ladder, or the like. To make a reliable connection, a file should be used to remove a small area of paint, so that the test wire can be clipped onto bright shiny metal. After testing is complete, the paint <u>must</u> be repaired with a material compatible with the original coating.

4-18. Anode-to-electrolyte potentials

The anode-to-electrolyte potential provides an indication of which lead wire is attached to the anode. Also, by moving the half cell reference electrode, the location of the buried anode may be pinpointed. An abnormally low anode-to-electrolyte potential may indicate a severed lead wire or a depleted anode.

a. The measurement of anode-to-electrolyte potential is usually possible only at cathodic protection test stations. This measurement is not necessary where the anode can be physically inspected, as in a water tank or along a wharf.

b. This measurement is made with exactly the same electrical connections as for measuring structure-to-electrolyte potential. The negative terminal of the voltmeter is connected to the reference electrode and the positive terminal to the anode under test. When measuring at a test station, connect the positive meter lead to the appropriate terminal to measure structure or anode potential.

4-19. Anode-to-structure current

The ability of a cathodic protection system to do its job is directly related to the amount of current which passes from the anode to the structure. If the current flow decreases or stops, the amount of protection decreases or stops in direct proportion. A record of anode-to-structure current gives an indication of the level of protection provided to the system by the anodes under test.

a. This measurement is made by inserting an ammeter into the conductor between the anode and the protected structure. In a sacrificial anode system, this requires physically breaking into the anode-to-structure connecting lead (see Figure 4-2a for this measurement). In an impressed current system, the electrical connections are similar, except that the meter shunt is usually permanently connected into the circuit and it is only necessary to connect a millivoltmeter across the shunt (see Figure 4-4).

b. As in all DC measurements, it is necessary to observe the correct polarity and start at the highest range of the instrument in order to prevent overloading and damage to the meter.

4-20. Test stations

Cathodic protection test stations are simply leads which are brought to the surface of the ground or to some other easily accessible place so that electrical measurements can be made conveniently. There are two basic types of stations, above-grade and surface (flush mounted). Since the use of the test stations sometimes requires making a physical disconnection of the anode from the structure, it is extremely important to make sure that the connection is properly restored at the completion of the testing. Where shorting lugs are used, be sure that the nuts or screws holding the lugs in place are firmly snugged down and that a good electrical connection is made. Where galvanic anodes are involved, test leads should be terminated on terminals. Figure 4-16 illustrates a typical surface (flush mounted) anode test station. Various other types of test stations encountered are shown in figures 4-17 through 4-23.

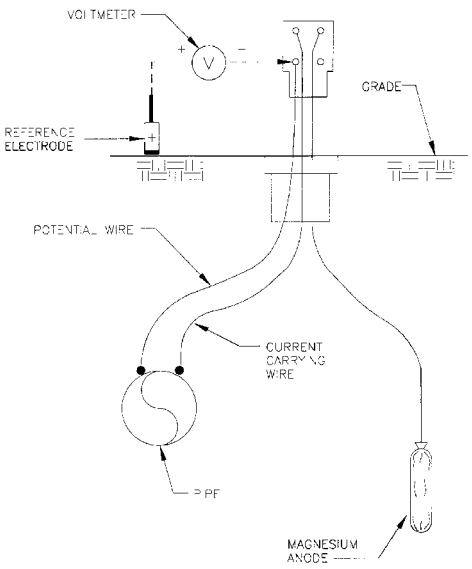

Figure 4-16

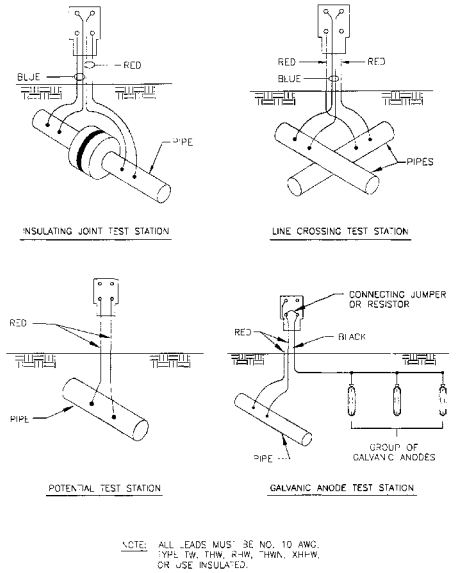

Figure 4-17

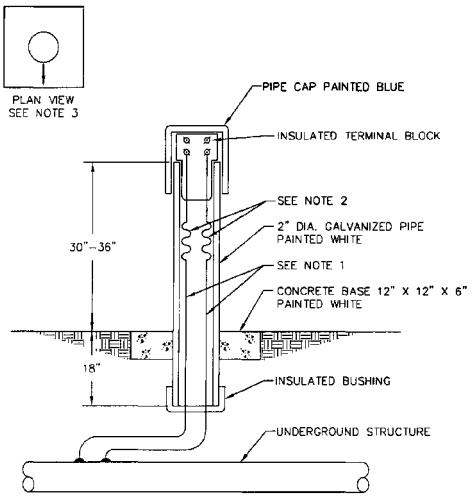

NOTES:

1. PROVIDE TWO TEST LEADS UNLESS OTHERWISE INDICATED.
2. LEAVE SUFFICIENT SLACK IN LEADS TO ALLOW REMOVAL OF THE TERMINAL BLOCK.
3. INSCRIBE AN ARROW IN CONCRETE BASE POINTING IN THE DIRECTION OF BURIED STRUCTURE.

Figure 4-18

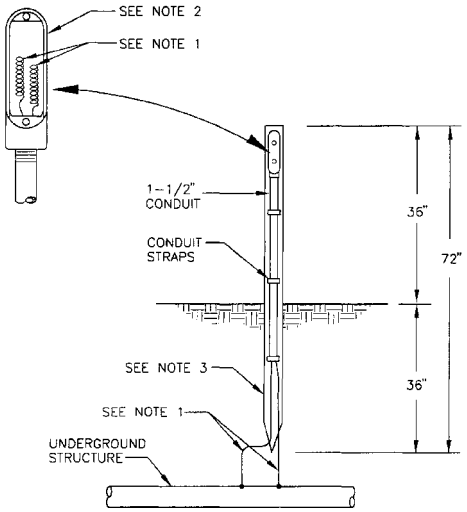

NOTES:

1. PROVIDE TWO TEST LEADS, COLOR CODED RED.
2. TEST BOX MUST BE COMPLETE WITH GASKET AND COVER.
3. WOOD POST MUST BE 4" X 4" X 6' LONG, TREATED.

Figure 4-19

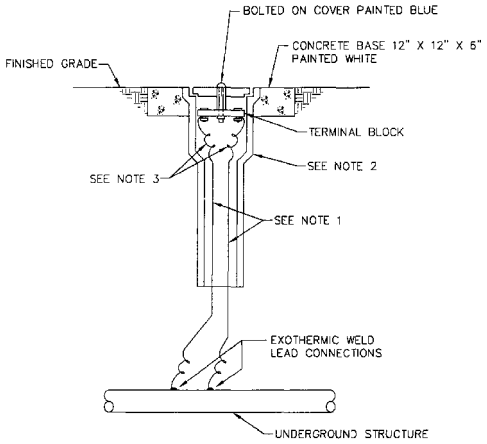

NOTES:

1. PROVIDE TWO TEST LEADS, COLOR CODED RED.
2. CURB BOX MUST BE A STANDARD PRODUCT AND MAY BE MADE OF CAST IRON OR PLASTIC. THE BOX MUST BE COMPLETE WITH A TERMINAL BOARD ATTACHED TO COVER AND READY TO RECEIVE THE TEST LEADS.
3. LEAVE SUFFICIENT SLACK IN LEADS TO ALLOW REMOVAL OF THE COVER FOR TESTING.

Figure 4-20

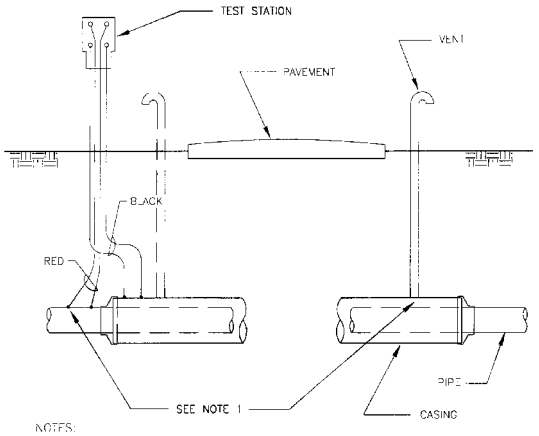

NOTES:

1. IF THE CASING HAS TWO VENTS ABOVEGROUND, THE CASING LEADS MAY BE OMITTED. IF ONLY ONE VENT IS PROVIDED, BOTH LEADS MUST BE PROVIDED AND CONNECTED TO THE UNVENTED END. IF NO VENTS ARE PROVIDED, CONNECT THE BLACK CASING LEADS TO THE FAR END OF CASING. IN ANY CASE, RED LEADS MUST BE INSTALLED ON THE CARRIER PIPE.
2. ALL LEADS MUST BE NO. 12 AWG, TYPE TW, THW, RHW, THWN, XHHW, OR USE INSULATED.

Figure 4-21

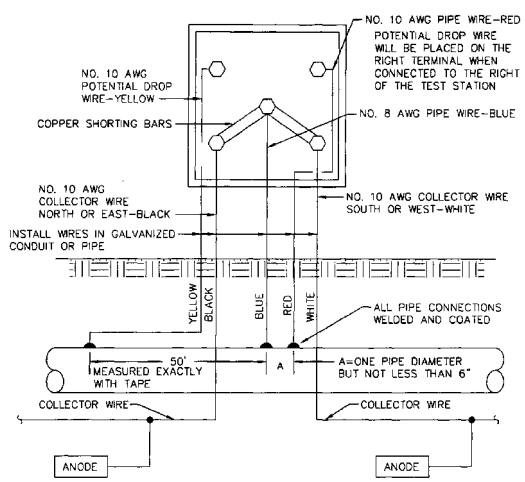

Figure 4-22

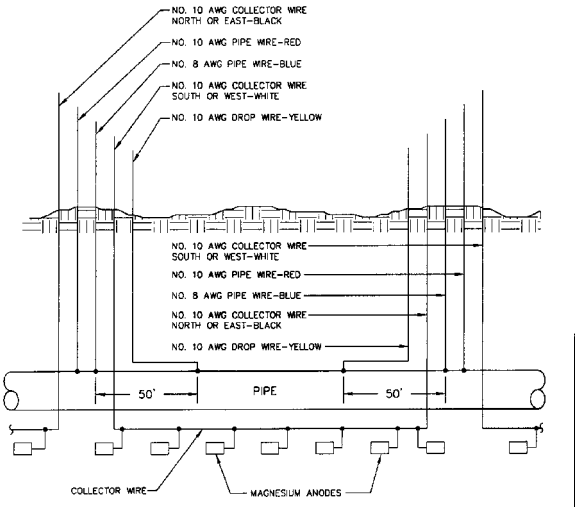

Figure 4-23

4-21. Soil resistivity

Figure 4-5 shows how the instrument is connected in the field to soil probes or pins. The soil resistance instrument reads directly in ohms. The soil resistivity is calculated from the formula:

P =191.5AE/I (see paragraph 4-4)

To measure soil resistivity to various depths, the pin spacing is varied to obtain the resistivity to the depth equal to the pin spacing. In practice, test harnesses are used whereby the spacing between the pins for the various depth measurements are pre-measured, so that numerous sets of soil resistivity data can be taken without the need to manually measure out the pin spacings. Figure 4-24 shows such a system. Measurements are made to the various depths along the route of a pipeline, or at points throughout a distribution network. When taking these readings, it should be noted that the existence of underground metallic structures will influence the measurements. Always set the pins in a straight line, remote from, or perpendicular to underground metallic structures. Record the resistances and depths in a table, and calculate each value using the formula. If the resistance value for a depth is greater than for shallower depths, there is an error in the measurement, and the test should be repeated. The measured resistance value prior to calculating the resistivity should <u>always</u> decrease with depth. It is possible, however, for the calculated resistivity to be higher for the greater depths.

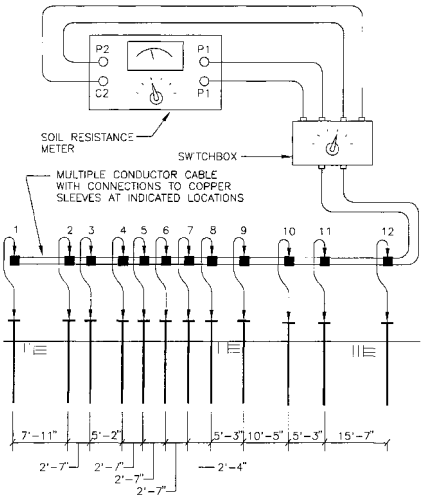

Figure 4-24

4-22. Electrical continuity of structures

For existing structures, the electrical continuity of the structure must be evaluated in order to design an effective cathodic protection system for the structure. If the structure is not electrically continuous then either continuity must be achieved by the installation of continuity bonds or the structure must be protected using independent cathodic protection systems for each electrically isolated section of the structure. Continuity may be evaluated using several methods.

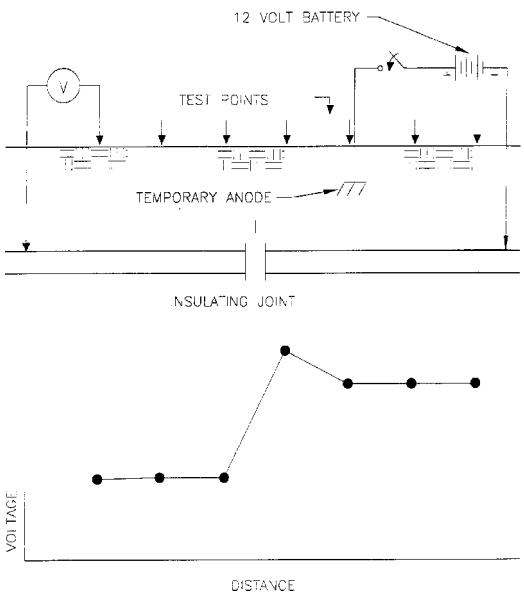

Figure 4-25

a. Method 1. The simplest method used to locate insulating or high resistance joints is by making structure-to-electrolyte potential measurements over the protected structure. As shown in figure 4-25, all potential measurements past the insulating joint are actually average potentials of a larger and larger section of the pipe section to which the meter is connected. This method is subject to the influence of other structures in the area and variations in environment along the structure and often is inconclusive.

b. Method 2. A more reliable method of continuity testing is illustrated in figure 4-26. In this method, a current is applied to the structure and the potential drop along the structure is measured. High resistance joints are easily located using this method.

c. Method 3. A third method of continuity testing involves the use of an audio frequency pipe locator. At a high resistance or open circuit joint, the pipe locator signals vary as shown in figure 4-27 if a low frequency (audio frequency) is used.

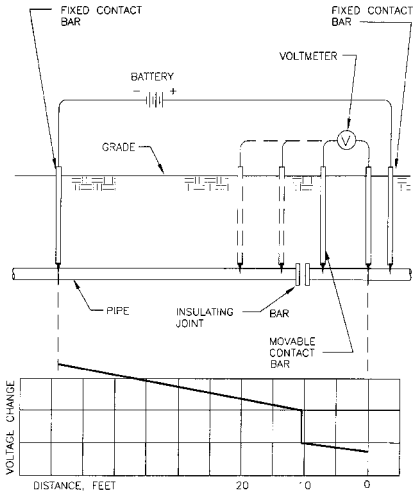

Figure 4-26

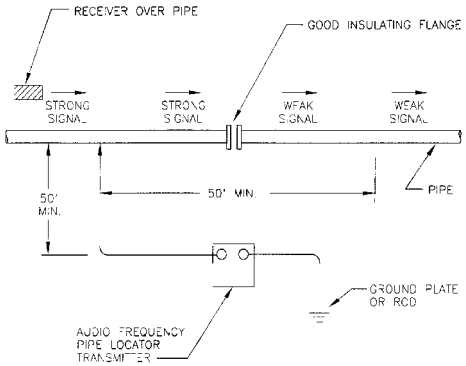

CONTINUITY TESTING – PIPE LOCATOR METHOD

Figure 4-27

4-23. Electrical isolation

Insulating joints are occasionally used to isolate sections of structures so that the protection of each section can be handled separately or so that a cathodically protected structure can be isolated from a structure without cathodic protection.

a. Buried structures. For buried structures, direct measurement of the insulation resistance of a joint is difficult to determine because the conductivity of the soil effectively bypasses the joint. Buried insulating flanges should always be equipped with test stations for testing of the joint. Connections for testing insulating joints are shown in figure 4-28. At the two-wire test station, a test current of several amperes is applied. If the measured potential on the supposedly isolated section does not change, or if it changes to a more positive value when the test current is applied, the insulating flange is effective. Special instruments have also been specifically designed to perform the test of insulation at two-wire test stations. As previously shown, an audio frequency pipe locator can also be used to test buried insulating connections.

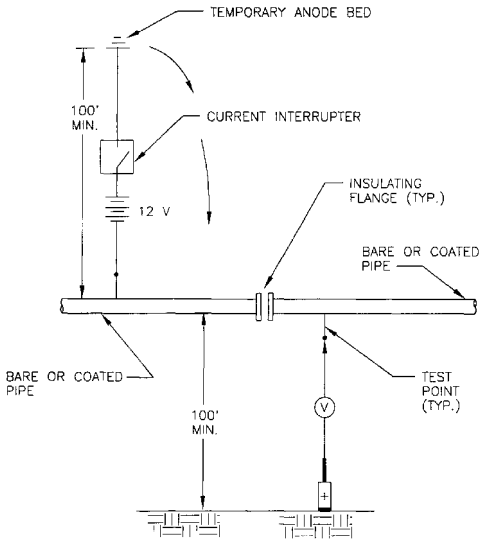

Figure 4-28

b. Aboveground structures. For aboveground insulating fittings, more direct methods can be used to test the effectiveness of the insulation. If there is an appreciable potential difference (over 100mV) between the isolated sections, the insulation is effective. A flange insulation tester (instrument) that uses high frequency skin effect current is preferred if available. Figure 4-29 illustrates such an instrument.

Figure 4-29

4-24. Electrical resistance between structures

It is often necessary to determine the electrical resistance between two buried structures, across an insulating joint (between two sections of buried structure separated by an insulating joint) or between a casing and pipe. These measurements, referred to as "internal resistance", often give values less than 1 ohm, or when dealing with bare pipes and cables, sometimes less than one-tenth of an ohm. Therefore, measurements should be taken so that they do not include lead wire connection or instrument resistances. Generally, two test leads are recommended at each location for ease of measuring internal resistance (two on either side of an insulating joint, two on the casing and two on the pipe, or two on each buried structure). Measured current is applied through one pair and resulting voltage change measured across the other pair. If test leads are not available, other means of contact such as probe bars must be used. Here, an understanding of test lead and contact resistance is particularly important. For example, if it is necessary to measure resistance between a pipe line and casing and test leads are not available at the location; bars are used. One bar is pushed through

the soil to contact the casing, and another to contact the pipe. A battery and ammeter are connected between the two bars so that when the circuit is completed, current flows from the battery through the ammeter to the probe bar. It then flows to the pipe, and from the pipe to the soil or point of contact between casing and carrier pipe. It next enters the casing, travels along the other probe bar, the lead wire, and back to the battery (Figure 4-30a). Flowing current encounters resistance all along its circuit. Of interest is the current's behavior as it flows from casing to pipeline. The pipe may or may not be in electrical contact with the casing. If it is, there is very little resistance for the current to overcome, because metal surfaces touching are a low-resistance path (low voltage required for high current flow). If the pipe is not touching the inside of the casing and the annular space is clean and dry, it is necessary for the test battery current to leave the casing outer surface and flow into earth. It passes through the soil until reaching the pipe surface where it enters through "holidays" in the coating. Less battery current flows along the path, and more voltage is required to move that which does. Resistance is higher here than in the previous case. If no current passes through the above mentioned circuit when the test current circuit is completed, a bad connection somewhere in the test set-up is probably the cause. It is most likely that probe bars are not making good electrical contact with the casing or pipe. This is fairly simple to correct. However, another inaccuracy still exists, because the voltmeter leads are connected to the wrong place in the circuit. These wires contact the two probe bars. Test current from the battery also passes through these bars on its way into the casing and out the carrier pipe. Because of this, probe bar-to-pipe contact resistances (of both the casing and carrier pipes) are included in the circuit between the two leads connected to the voltmeter. Substantial resistance is often encountered in probe bar-to-pipe contact and is part of the total computed pipe-to-casing resistance. This added resistance can greatly alter the voltage reading and, therefore, change the measured resistance. For example, a typical pipe-to-probe bar point resistance is 0.25 ohms, so that the two bars together can add 0.50 ohms. With well-coated lines and casing-to-pipe resistance of two or more ohms, this additional value does not have as much effect as poorly coated or bare structures and casing-to-pipe resistances of only a few tenths of an ohm. In the latter situation, total resistance is often more than doubled. Probe bar contact resistance can be excluded from resistance measurement by using four probe bars. The voltmeter test leads are removed from the two contact bars used to supply the test current, two additional probes are installed (one contacting the pipe, the other contacting the casing, as shown in figure 4-30b). These are used only for voltmeter connections. When measured test current is passed between casing and pipe, the true change in pipe-to-casing voltage is found. Contact resistance through which test current flows is no longer included between the two voltmeter leads. Therefore, it is no longer included in total computed pipe-to-casing resistance. This calculated resistance is now the correct pipe-to-casing value. If one test lead was available on each of the carrier pipes and casings, contact resistance would probably be less, because a brazed or soldered connection has replaced the probe bar point. However, the possibility of a high-resistant connection always exists and if the measured resistance is less than one ohm, any contact can easily add appreciable error. So it is always desirable to use two connections on each structure when determining resistance. These same considerations are valid for measuring any internal resistance, such as between two buried structures or across an insulating flange. In these cases, as for the casing, the result is also often less than one ohm and, with bare pipes and cables, sometimes less than one-tenth of an ohm. Two contacts on each structure or two contacts on each side of the insulating flange would be used. Measured current would again be applied through one pair of contacts, and resulting voltage change would be measured across the other pair. In these resistance determinations, one is concerned with change in voltage produced by current supplied from the test battery. That is, voltage is read with and without test current flowing. The difference between these two readings is

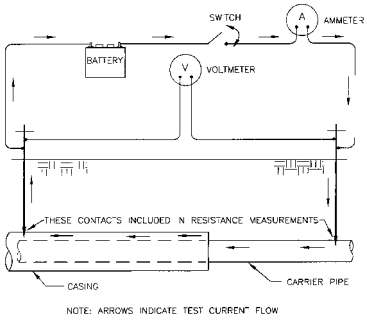

Figure 4-30a

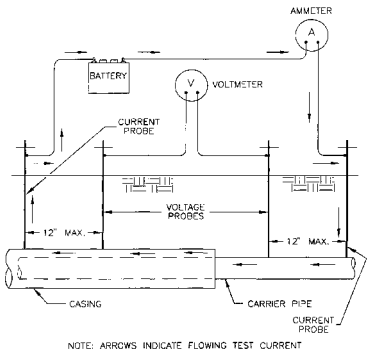

Figure 4-30b

the voltage change between pipe and casing, between two buried structures, or across an insulating flange produced by measured test current. This change, divided by test current, gives resistance. Resistance between a pipeline and casing, between two buried structures, or across an insulating flange measures opposition encountered by electrical current leaving the surface of one structure, passing through earth or water, and entering the surface of another. The greatest percentage of this resistance is found at the structure-to-electrolyte interface. Even if the structures are uncoated, deposits which build up on these surfaces are often poor conductors and act as thin coatings, increasing the resistance between the structure and the soil.

4-25. Coating conductance tests

Coatings can both reduce corrosion of structures and reduce cathodic protection current requirements. In the design of cathodic protection systems, the condition of protective coatings is an important factor. For buried structures, the condition of the coating can be determined by electrical testing. The effective electrical resistance of the coating is determined by these tests. Instead of reporting the measurements as coating resistance, they are converted to conductivity per unit area, or conductance. The greater the conductance, the poorer the coating. Coating conductance is measured by two methods: the short line method, and the long line method.

a. Short line method. The short line method is used when an isolated section of pipeline is available for testing. The test setup is shown in figure 4-31. In the short line method, the test current is applied, then interrupted. A test current of 2 to 10 amperes is required. The difference between the applied and interrupted current (which is zero) is ▲I. The change in structure-to-electrolyte potentials at the two test points (▲E1 and ▲E2), which occur when the current is applied, then interrupted, are measured. If the ratio ▲E1/ ▲E2 is greater than 1.6, a correction factor from table 4-1 is applied by multiplying ▲E2 by the correction factor. Coating conductance (µmhos/ft) is then calculated using the following formula:

EQUATION: ▲I x 106/[(▲E1 + ▲E2)/2] x L

Where: ▲E1 = pipe-to-electrolyte potential at Test Point 1 with current on -pipe-to- electrolyte potential with current off (volts)

▲E2 = pipe-to-electrolyte potential at Test Point 2 with current on - pipe-to-electrolyte potential with current off (volts)

L = length of test section (feet)

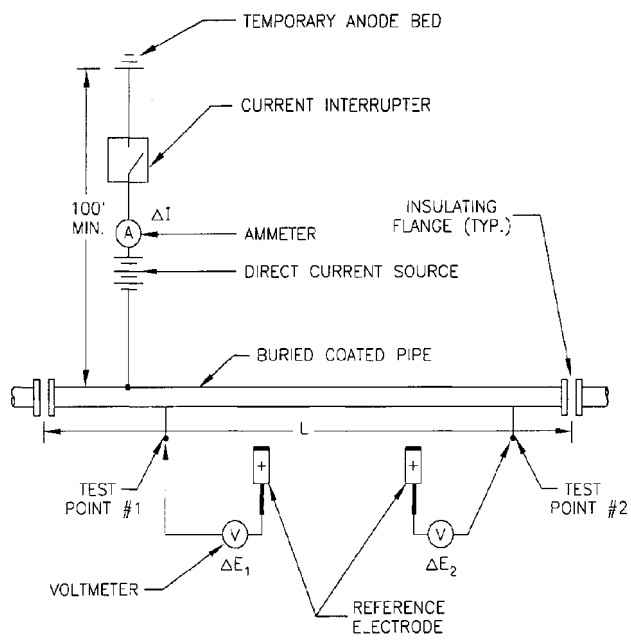

COATING CONDUCTANCE – SHORT LINE METHOD

Figure 4-31

Table 4-1 Short Line Coating Conductance Correction Factors							
▵E1/▵E2	Factor	▵E1/▵E2	Factor	▵E1/▵E2	Factor	▵E1/▵E2	Factor
1.1	1.032	1.6	1.193	2.1	1.345	2.6	1.492
1.2	1.066	1.7	1.224	2.2	1.375	2.7	1.520
1.3	1.099	1.8	1.254	2.3	1.404	2.8	1.548
1.4	1.130	1.9	1.286	2.4	1.433	2.9	1.576
1.5	1.163	2.0	1.315	2.5	1.461	3.0	1.604

b. Long line method. The long line method is used when a section of structure cannot be effectively isolated or when the ration ▴ E1/▴ E2 in the short line method exceeds 3.0. The test setup for the long line method is shown in figure 4-32. In the long line method, the test current is applied and the current flowing through the pipe is determined at the two IR drop test points. The structure-to-electrolyte potential at the two IR drop test points is measured with the current on. The test current is interrupted and the change in voltage, in millivolts, at the two IR drop test points (▴ EMv1 and ▴ EMv2) as well as the change in potential at the two potential test points (▴ E1 and ▴ E2) and additional test points are measured. The currents I1 and I2 are calculated by multiplying the millivolt readings by the reciprocal of the structure resistance between the two contact points. As in the short line method, if ▴ E1/ ▴ E2 is greater than 1.6, ▴ E2 should be multiplied by the correction factor found in table 4-1. If the ratio is greater than 3, the test section should be shortened. The coating conductance (umhos/ft.) is then calculated using the following formula:

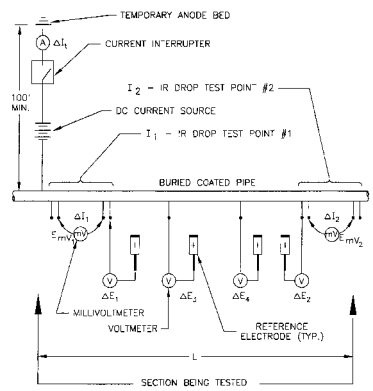

Figure 4-32

EQUATION: $[(\blacktriangle I1 - \blacktriangle I2) \times 10^6]/(\blacktriangle Eavg \times L)$

4-26. Interference tests

Cathodic protection sometimes causes undesirable effects on structures not connected to the protection system. This occurs because some current is picked up by these "foreign" structures at one point, and in attempting to return to the source and complete the circuit, is discharged at another point. Corrosion occurs at the current discharge point. Current can cause corrosion damage by passing between two structures or across high-resistance joints in the same structure. Sources of Interference Currents:

Constant Current - These sources have essentially constant direct current output, such as cathodic protection rectifiers and thermoelectric generators.

Fluctuating Current - These sources have a fluctuating direct current output such as direct current electrified railway systems, coal mine haulage systems and pumps, welding machines, direct current power systems, and telluric currents.

a. Interference from cathodic protection rectifiers.

(1) A cathodic protection rectifier system can cause stray current interference. A structure or group of structures not electrically connected to a structure which is protected by a rectifier system can collect current from the electrolyte. Since there is no metallic return path, current will flow on the affected structure and discharge to the electrolyte in order to return to its source.

(2) Testing requires cooperation by the owners of the structures involved. Such cooperation is best effected by a corrosion coordinating committee; all companies operating underground or underwater structures, and particularly those under cathodic protection, should be members of such a committee. A list of most existing committees may be obtained from the National Association of Corrosion Engineers, P.O. Box 218340 Houston, TX. 77218-8340. Interference tests must be made on all structures adjacent to a cathodic protection system to determine effects and to allow design of mitigation measures.

(3) Cathodic interference can be detected by measuring structure-to-soil potentials and current flow (IR drop) with cathodic protection current on and off. Structure-to-soil potentials give indications only when measured in an area of current discharge or pick-up. Current flow (IR drop) readings show the relationship between pick-up and discharge areas (illustrated in Figure 4-33).

(4) Pipe-to-soil potential and current flow are measured at many locations with the cathodic protection rectifier turned on and with the system turned off. The algebraic difference between the "on" and "off" reading gives the interference effect of the cathodic protection rectifier. The location showing greatest pipe-to-soil potential change in the positive ("unprotected") direction is called the "critical" or "control" point. This is often at the point where the protected and unprotected pipes cross. Mitigation can usually be accomplished by installing an electrical bond between the unprotected structure (at the location of maximum discharge) and the protected structure. The method of calculating bond resistance (to get proper current drainage) is in paragraph 5-35.

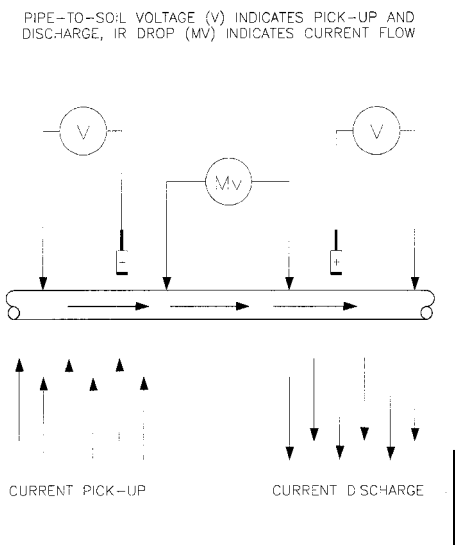

Figure 4-33

(5) Another method of interference testing is to use an experimental drainage bond between structures. Proper drainage can be determined by trial-and-error, using a variable resistor to alter drainage current. Required drainage current can also be computed from test data. The form shown in figure 4-34 is useful for this.

(6) When conducting current requirement tests or initially energizing impressed current cathodic protection, all companies owning underground structures in the area should be notified and coordination tests made with those interested. Current drainage requirements for each structure, from tests at various anode locations, can be determined.

b. Interference from variable (Fluctuating) sources. While interference testing determines effects of steady stray currents, another type of stray current survey analyzes fluctuating stray currents. Such analysis is specialized and requires study to master all techniques.

(1) All the basic measurements can be used in studying fluctuating stray currents. Perhaps the most informative are measurements similar to those used in interference testing; structure-to-electrolyte potentials and IR drops along structure or electrolyte. Methods of analysis, however, are different and specialized equipment is used. The major concern in performing a stray current survey is to find out the degree of damage and determine the source of the currents.

INTERFERENCE TESTS

Structure _____

Date _____ Rectifier Location _____ Rectifier Output _____ Volts _____ Amps

Test for Determination of Exposure:

Location of Tests: _____

A. Structure to $CuCuSO_4$ - Rectifier On (volts) _____

B. Structure to $CuSuSo_4$ - Rectifier Off (volts) _____

C. Voltage Between Structures - Rectifier On (volts) _____

D. Voltage Between Structures - Rectifier Off (volts) _____

Test for Determination of Required Drainage Current: (Using experimental drainage bond between structures).

E. Current drainage through test drain with rectifier operating (amperes) _____

F. Structure to $CuCuSO_4$ with test drain connected and rectifier operating (volts) _____

_____

G. Voltage between structures with test drain connected and rectifier operating (volts) _____

_____

H. Voltage between structures with test drain connected and rectifier not operating (volts) _____

_____

I. Volts reduced (F-A) _____

J. Volts reduction per ampere $\frac{I}{(A-E)}$ ____ _____

K. REQUIRED DRAINAGE CURRENT in Amperes $\frac{(A-E)}{J}$ ____ _____

Figure 4-34

(2) Fluctuating or periodic changes in structure-to- electrolyte voltage values and unusual or fluctuating currents are indicative of stray currents. Stray currents may affect structures just as cathodic protection does. Structures may be protected or damaged by stray currents, depending on whether current is flowing to or from the structure.

(3) In order to determine the pick-up and discharge points in fluctuating stray current areas, correlation curves are plotted (see Figure 4-35). Values of structure-to-electrolyte potential (calculated from IR drop) are plotted against current flow along the structure (Graphs "A" through "E"). In addition, current flow at different locations on the same structures are calculated (Graphs "A-C" and "C-E"). One method of finding these points is through the current measurements. The current is measured at two points simultaneously, sufficient readings being made to cover the range of variation of the current. These results are averaged by plotting the values read at the first point against those simultaneously read at the second point and a straight line is drawn through the points. If the line currents at the two points are equal, that is, if there is no net gain or loss of current between them, the straight line will make a 45 degree angle with either axis. Deviation in the slope of the line from the 45 degree angle is a measure of the current discharge or collection. By leap-frogging the first measuring circuit ahead of the second and repeating the correlation measurements, the loss or gain in the next section is determined in the same manner, and so on throughout the section of line being investigated. The section showing the greatest loss of current is taken as the area of maximum exposure. Outside of the necessity of taking simultaneous readings due to the fluctuating current, this method is the same as conventional line current measurements. Where foreign structures are nearby, structure-to-electrolyte potentials versus voltage between structures are correlated (Graph "F"). For each group, at least 20 to 30 readings are required to provide good correlation. Radio communications may be required, because readings must be simultaneous. X-Y recorders can also be used to advantage to record and plot these readings at the same time. The most effective way to use a recording voltmeter ("X-Y recorder") is to select a location where corrosion has been experienced or an area where stray currents are suspected. The meter range selected should be high enough to make sure that voltages to be recorded remain on the chart and yet be sensitive enough to indicate small voltage variations. The meter should be sheltered from weather and located where it will be free from shock and excessive vibrations. Reliable connections are important and should not be tampered with during recordings. Before the recording starts, the meter should be checked for accuracy by comparing the reading indicated by X-Y recorder with that indicated by another voltmeter. The indicator arm should be adjusted to zero on the chart, and the date and

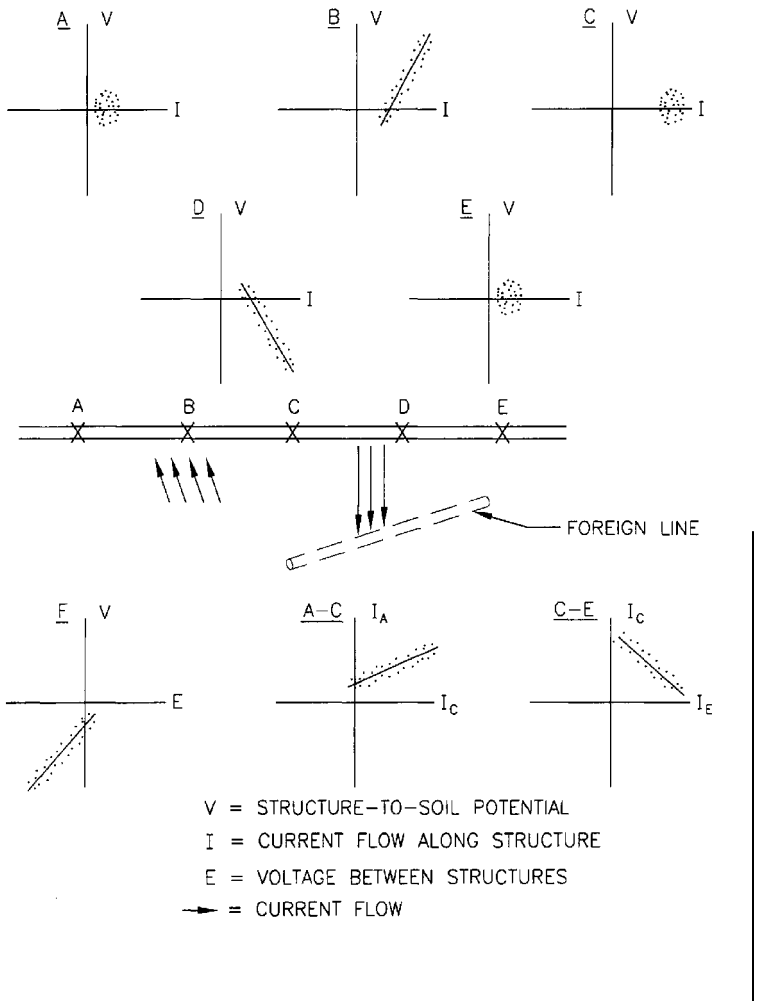

Figure 4-35

time should be recorded on the chart. The instrument should be turned on to make sure it is recording properly. No special attention is required other than an occasional check to make sure that the instrument is performing satisfactorily. Charts for recording voltmeters should show the voltage range used, dates and times installed and removed, location of test, and any other pertinent data.

c. Detection of interference currents. During corrosion control surveys, personnel should be alert for electrical or physical observations which could indicate interference from a neighboring source:

(1) Structure-to-soil potential changes on the affected structure caused by the foreign direct current source.

(2) Changes in the line current magnitude or direction caused by the foreign direct current source.

(3) Localized pitting in areas near to or immediately adjacent to a foreign structure.

(4) Breakdown of protective coatings in a localized area near an anode bed or near any other source of stray direct current.

d. Interference is resolved when the correlation of maximum current discharge has been changed to a correlation which shows that zero current discharge is being achieved in the exposure area by the corrective measures taken. These corrective measures are generally accomplished by metallic bonding. However, it should be understood that interference problems are individual in nature and the solution should be mutually satisfactory to the parties involved.

4-27. Potential measurements of facilities under pavement.

It has been discovered that past methods of measuring structure-to-electrolyte potentials of metallic facilities (pipelines, tanks, metallic sheath cables, etc.) under pavement, using a reference electrode in contact with the pavement, can result in appreciable error. The most effective way of getting accurate measurements is to install a permanent pavement insert with a removable plug that will allow insertion of a reference electrode. These inserts allow insertion of a reference electrode through the pavement. These inserts should be installed in the pavement at points where metallic facilities cross and at least every 100 feet along the route of metallic pipelines or cables. Figure 4-36 shows a typical installation of a 1-5/8-inch plastic pavement insert with a 3/4- inch removable cadmium-plated plug. A copper-copper sulfate reference electrode that will easily fit through the hole in the pavement insert is commercially available. The hole beneath the pavement insert should be filled with sand to within 4 inches of the top of the pavement insert to allow the 5-3/4-inch long and 3/8- inch diameter reference electrode to make contact with the sand. If measurements must be taken immediately after adding sand, a small amount of water should be poured into the hole before taking potential measurements. For future measurements, the sand will absorb enough moisture from the surrounding media so that accurate measurements can be made without adding water. A potentiometer-voltmeter circuit or a voltmeter having at least 10 megohm internal impedance should be used for these measurements.

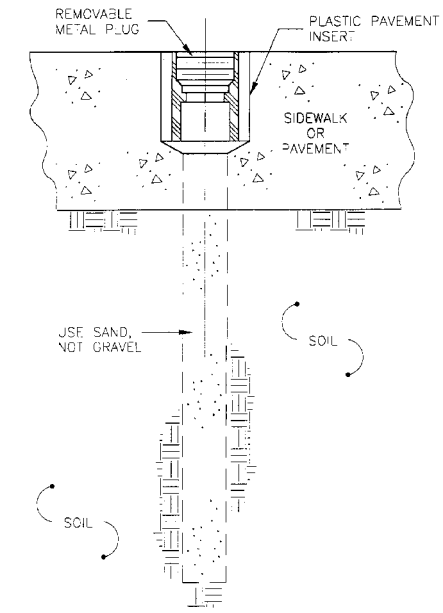

DRILL A HOLE 1-5/8 INCHES IN DIAMETER. JUST HAMMER INSERT IN UNTIL FLUSH WITH PAVING. SEALING SHOULD NOT BE NECESSARY.

Figure 4-36

Section IV. State-of-the-art equipment developments

4-28. Elimination of IR drop

Potentials measured between a pipe and a reference electrode with a DC voltmeter indicate the effectiveness of a cathodic protection system. These potentials represent levels of chemical activity at the soil/pipe interface. However, if the cathodic protection system is operating while a potential is being measured, an error called IR drop is present which clouds the data. New corrosion control instruments are available to pipeline operators. These measurement systems can, with a high degree of accuracy, simply and reliably produce error-free cathodic protection effectiveness measurements.

a. IR Drop. Current flow in any resistor causes the voltage decrease called IR drop. IR drop occurs whether the resistor is metallic, or electrolytic. Figure 4-37 schematically shows the measurement of IR drop in an electrical circuit. A voltmeter placed in parallel with a resistor indicates the IR drop caused by the current flowing through the resistor. Figure 4-38 diagrams a cathodic protection system with the current flow shown and the voltmeter connections that would be necessary to measure IR drop in various parts of the circuit. Figure 4-39 gives a schematic representation of the locations where electrical resistance can be found in a circuit established to take pipeline potentials. A cathodic protection system can have both metallic and electrolytic IR drop if protection current flows between the anode and the structure during potential measurements. Figure 4-40 shows the effect of IR drop. A potential becomes more positive, indicating less protection, when the reference half-cell is moved toward the protected structure, and more negative, suggesting more protection, as the reference half-cell is moved away from the cathodically protected structure. IR drop in an active cathodic protection environment always causes potentials to show more protection than actually exists.

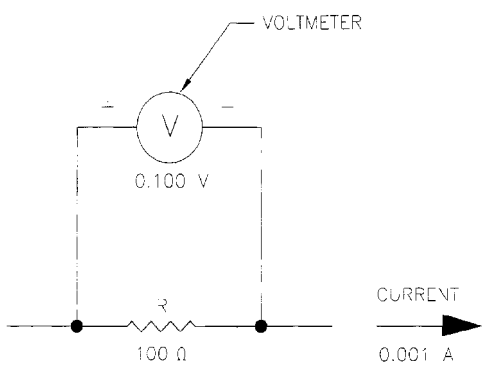

Figure 4-37

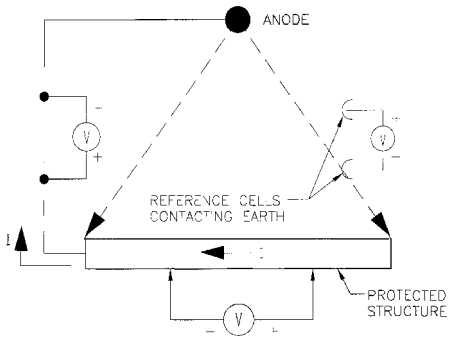

Figure 4-38

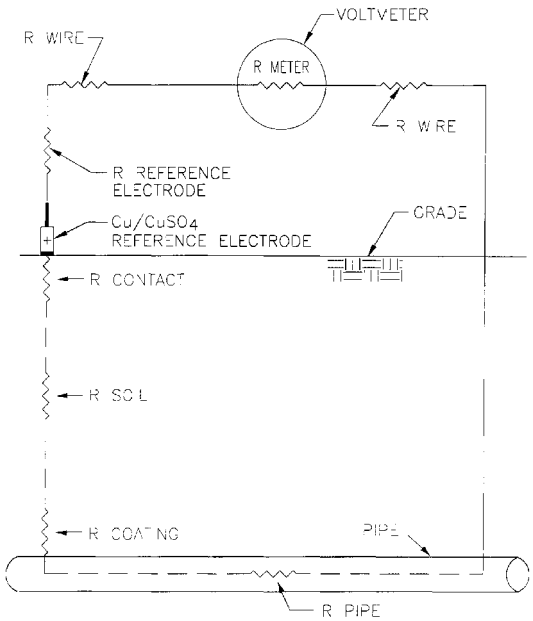

Figure 4-39

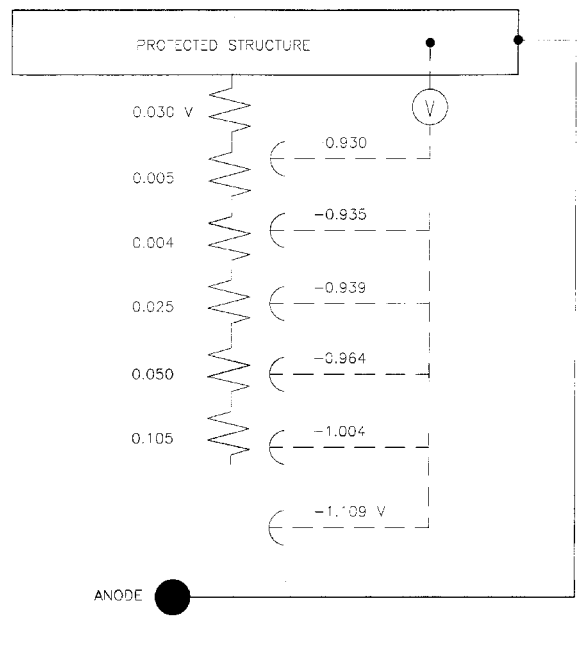

Figure 4-40

b. IR drop corrections. Table 4-2 summarizes the procedures used to correct the IR drop. The most accepted is the instant-off reading, where cathodic protection current is interrupted at the moment of potential measurement. IR drop disappears as soon as current flow is zero. Cathodic protection current produces a polarization film, so the time between the interruption of current and the actual potential measurement should be very short since depolarization may occur quickly. Figure 4-41 shows a typical variation of potential with time using the interruption technique. Until now, the most reliable instrument for collecting data to make an instant-off potential interpretation has been a strip chart recorder. If multiple current sources affect the area to be tested, synchronous interruption is necessary. Corrosion control is required by Federal law for natural gas transmission and distribution pipe. Part 192, Title 49, Code of Federal Regulations, relates to "Transportation of Natural and Other Gas by Pipeline; Minimum Federal Safety Standards". Appendix D of this law is titled "Criteria for Cathodic Protection and Determination of Measurements". Section 2 of this Appendix, "Interpretation of Voltage Measurement", states, "IR drop must be considered".

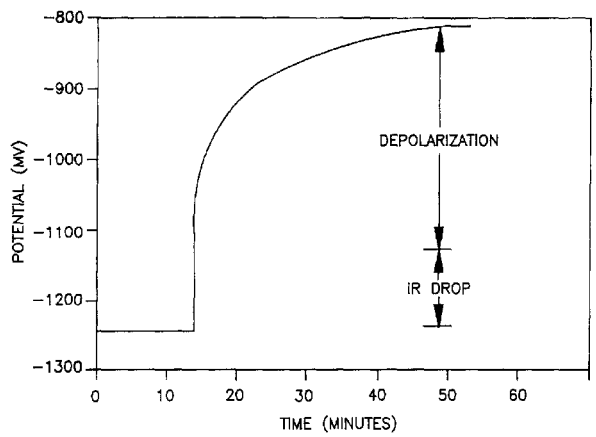

Figure 4-41

Table 4-2 Summary of IR Drop Correction Techniques			
Method	Procedure	Advantage	Disadvantage
Ignore	None	Easy	Incorrect if IR Drop is significant
Remote Earth	Measure far from protected structure	Apparently easy	Protection criterion must change with situation
Extrapolation	1. Measure EMP variation with position 2. Extrapolate with zero distance	Better correction	1. Time consuming 2. Extrapolation equation
Reference cell placement	Install cell as close as possible to structure	Better correction	1. Design and installation is required 2. Not suitable for long structures
Interruption	Interrupt current at moment of measurement potential	Best correction	1. Current interruption can be very inconvenient 2. Equipment required for rapid interruption

c. Waveform analyzer/pulse generator development. During 1981, Battelle Columbus Laboratories, working under contract to the Gas Research Institute, concluded that if IR drop is present when measuring pipe-to-soil corrosion control potentials, incorrect assessment of cathodic protection levels on buried gas pipe could result. Research during 1982 looked for ways to determine true protection. The concept of the Waveform Analyzer evolved from this research. An early approach considered the DC output of an AC rectifier. For every second of 60 Hertz input, there are regular intervals when the DC output current is zero. Theoretically, if a cathodic protection potential could be measured at the instant when DC current is zero, then the potential would be free of IR drop. Figure 4-42a shows the measuring arrangement, and figure 4-42b shows the oscilloscope waveform of DC potential which would result under ideal conditions. The Waveform Analyzer is a microprocessor based hand-held voltmeter which uses a complex computer algorithm to measure the ON and OFF (IR drop free) pipe-to-soil potentials in impressed current cathodic protection systems. In order for the WFA to accurately calculate the OFF potential, a Pulse Generator must be installed in each rectifier or current source affecting the location where the pipe-to-soil measurement is being made. The Pulse Generator interrupts the output of the rectifier in which it is installed on a precise timing cycle. This interruption generates the precisely timed zero current pulse which is required by the WFA to accurately calculate the OFF potential. Pulse Generators are low in cost and are designed to be permanently installed in the rectifiers. Pulse Generators do not require any synchronization; they are installed in the rectifier, turned on and left operating permanently. The WFA uses a complex algorithm or set of computer instructions to calculate the ON and OFF P/S potential. The algorithm consists of the following steps:

(1) The WFA captures a digital picture of the P/S potential waveform by recording thousands of voltage readings on the waveform.

(2) Digital signal processing techniques are then used to filter out any induced AC or 60 cycle noise in the waveform.

(3) The ON potential readings are calculated.

(4) The IR drop contribution from the pulse generator having the greatest influence on the reading is determined by analyzing the zero current pulses from the other pulse generators.

(5) Once the total IR drop contribution is known, the OFF potential reading is calculated by subtracting the IR drop from the ON value. It should be noted that the WFA algorithm includes the IR drop contribution from rectifiers having the largest IR drop. To date, in extensive field testing conducted on numerous cross country pipeline, tank farms, and industrial facilities, no location has been found where more than five rectifiers were influencing the reading.

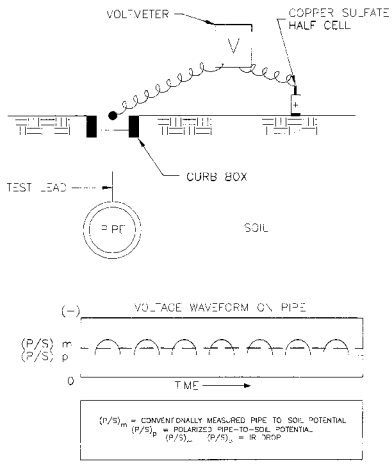

Figure 4-42a

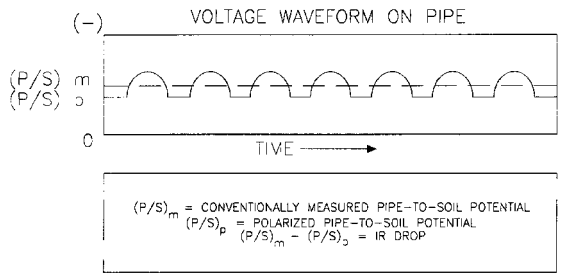

Figure 4-42b

4-29. Computerized data loggers

Computer technology provides the corrosion engineer and manager with the most powerful tools at their disposal. More data can be collected, more accurately, and more economically, than ever before. Data communication, analysis and management have been dramatically impacted by computer systems. Alternative solutions to problems can be examined much more quickly, enhancing both engineering and management judgements. Test methods and equipment have changed significantly. Some of the first computer support systems were for close interval surveys (CIS) on underground pipelines, which were followed shortly thereafter by application of similar techniques to offshore pipelines and structures.

a. Close interval surveys. CIS surveys on underground pipelines are extremely valuable for locating areas of coating damage and areas of probable corrosion damage. Other problem areas related to interference, current attenuation, foreign contacts and electrical shielding are also detected. Types of surveys include:

(1) Continuous potential profiles

(2) On/instant-off potential profiles

(3) Surface potential surveys

Figure 4-43

(4) Side drain surveys

(5) Geomagnetic earth current compensation

Figure 4-43 illustrates equipment used for this type of survey.

b. Other applications. Other field computer applications for corrosion control testing include:

(1) Stray current testing

(2) E-log-I testing

(3) Polarized potential analysis

(4) IR drop compensation

(5) Shorted casing investigation

(6) Analysis of foreign line crossings

(7) Rectifier and bond monitoring

(8) Test station surveys

(9) Ultrasonic testing

CHAPTER 5

OPERATION AND MAINTENANCE OF CATHODIC PROTECTION SYSTEMS

Section I. Introduction

5-1. General

In order to provide the increased structural lifetime and reliability intended, cathodic protection systems must be monitored and maintained. Economic analysis, made at the time when cathodic protection was selected as a means of corrosion control, should have included the cost of periodic monitoring and maintenance.

5-2. Required periodic monitoring and maintenance

Although cathodic protection systems often have design lives in excess of twenty (20) years, the effectiveness of cathodic protection systems usually changes with time. The consumption of both sacrificial and impressed current anodes can result in decreased anode output which results in inadequate protection. Deterioration of cable insulation or connections can result in increased circuit resistance with similar effects. Rectifier output may be reduced by aging of the diode stacks, or may be completely interrupted by electrical failure. The corrosion environment may change if there is a change in drainage patterns or the area around an anode is paved, reducing local soil moisture content. Construction of additional structures or modification to existing structures in the area may result in interference.

5-3. Design data required for system maintenance

In order for a cathodic protection system to be effectively monitored and maintained, the parameters used in the design of the system and the "as-built" configuration of the system must be known.

a. Drawings. "As-built" drawings of the cathodic protection system and the structure being protected should be available as should drawings of other structures in the area which might cause interference problems. The cathodic protection system drawings should include, as a minimum, the location and configuration of all test stations, the location and type of all anodes and rectifiers, and the location of all connections and insulating flanges. These drawings should be periodically updated to show any changes made to the cathodic protection system, the structure being protected, or nearby structures.

b. System data. The following system design parameters should be recorded and kept with the system drawings in order to properly monitor and maintain the cathodic protection system.

(1) Design Potentials. The desired potentials used in the design of the cathodic protection system should be indicated. In some cases, different criteria may be used to establish minimum protective potentials at different locations on the same structure.

(2) Current output. The design current outputs of the rectifiers or galvanic anodes in the system should be recorded. This data is most important in the initial system check-out but may also be used to evaluate discrepancies in structure-to-electrolyte potential readings.

(3) System settings and potential readings. The initial system settings and potential readings should be recorded. Potential readings taken both at the time of initial system adjustment and during periodic monitoring should be recorded in order to detect trends in the readings. Changes in potential readings are often more important than the actual values themselves in determining the cause of improper system operation.

(4) Rectifier instructions. In order that all rectifiers in the system can be properly maintained, adjusted, and repaired, instructions for the rectifiers must be retained. An original copy should be retained in the maintenance files and a copy should be kept within the rectifier enclosure for field reference.

Section II. Galvanic anode systems

5-4. General

The operation and maintenance of galvanic anode cathodic protection systems should include visual inspections whenever possible, the measurement of current and potential for buried systems and water storage tanks, and the replacement of anodes and adjustment of anode output.

5-5. Visual inspections

Visual inspection may be made of both the protected structures and of the galvanic anodes. Inspection of the protected structure tells if corrosion is occurring, and if corrosion control methods are effective. Inspection of galvanic anodes tells whether the anodes are, in fact, sacrificing themselves to protect the structure and if the anodes need to be replaced.

a. Structures. Structures should be inspected for damage to coatings and for corrosion damage. The Natural Gas Pipeline Act (40 CFR, Parts 190-195) contains recommended procedures for inspection of gas lines. Usually, only structures such as the interiors of hot water tanks, chillers, and heat exchangers may be scheduled for visual inspection. Underground structures should be inspected as the opportunity arises. Inspection reports must be maintained in a permanent file. Buried pipelines and tanks must be inspected by the corrosion engineer when excavations are made for repairs, extension, or the installation of other facilities. Excavations for the specific purpose of examining buried structures are seldom justified. When inspecting structures, one should look at both the type and extent of corrosion and the condition of any coating which may be present. The surface of the uncoated structure should be cleaned down to bare metal by using a wire brush, scraper, or chipping tool on selected spots. The appearance of the clean metal should be reported, as well as the depth and extent of any pits or grooves which may be noted. If it is necessary to remove the applied coating of wrapped pipe for inspection purposes, the coating should be properly repaired before the backfill is replaced.

b. Visual inspection of cast iron structures.

(1) Graphitization

(a) Need to remove

(2) Breaks

(a) Origin of break

(b) Porosity

(c) Wall thinning

(d) Other defects

(e) Load concentration

(f) Corrosion

(g) Graphitization

c. Anodes. Galvanic anodes used in hot water tanks, water storage tanks, and mechanical equipment such as water chillers, heat exchangers, and evaporative condensers should be visually inspected whenever the equipment is down for repairs or inspection. If necessary, replacement of galvanic anodes should be made during the down period. A record of the inspection report should be kept in the corrosion engineer's file. Buried galvanic anodes cannot be visually inspected.

5-6. Electrical measurements

Since the components of buried galvanic anode systems cannot be visually inspected on a routine basis, the operator and engineer must rely on electrical measurements to indicate the condition of the system. Chapter 4, paragraphs 4-17, 4-18, 4-19 describe the methods for taking field measurements. The routine measurements to be made are: structure-to-soil (electrolyte) potential, anode-to-soil potential, and anode-to-structure current.

5-7. Frequency of measurements

It is desirable to take a series of electrical measurements on a newly installed buried galvanic anode system to determine the initial level of cathodic protection. After the initial series, measurements should be made after six months and one year of operation. This will enable the corrosion engineer to identify deficiencies and program corrective action. After the first year of operation, measurements should be made at least annually, unless condition indicate more frequent testing.

5-8. Structure-to-soil potential

The primary measurement to be made is that of structure-to-soil potential since this determines the adequacy of protection. Figure 4-1 shows the basic arrangement for making the measurement. The following spacing of potential measurements must be used initially and annually.

a. In congested areas, structure-to-soil potentials must be measured at service risers and at points over the main farthest from the anodes.

b. Potential measurements over long pipelines must be made over the main at points farthest from the anodes. The maximum interval between potential measurements should be 500 feet. The measuring and recording of structure-to-soil potentials can be used to determine the level of protection and the trend of changes in protection. Gradual changes in potential are indicative of anode depletion, changes in soil resistivity, or coating degredation. Sudden changes indicate broken leads, interference, shorted insulation, or changes in piping.

5-9. Anode-to-soil potential

The measurement of anode-to-soil potential serves as a check of lead continuity, anode condition, and location (peak potential occurs directly over anode). Where test stations are provided, the measurement should be made at the same time as that of structure-to-soil potential.

5-10. Structure-to-anode current

The rate of anode metal loss is directly dependent on the rate of current flow between the structure and the anode. This current flow is measured to give an indication of proper anode operation and to allow calculation of anode life. Where test stations are provided, the measurement should be made at the same time as that of structure-to-soil potential.

5-11. Galvanic anode replacement

It may be cheaper and easier to install new anodes than to troubleshoot and repair damage. Breaks in long

collector wires may be located with cable and pipe locators. When structure-to-earth potentials are too low because of depleted anodes, new anodes should be added to provide continuous protection of the structure.

5-12. Waterside installations for tanks and equipment

Galvanic anodes are routinely used for protection of the waterside of mechanical equipment such as condensers, hot water tanks, evaporative condenser plants, fire truck tanks, or other water carrying equipment. Although anodes are available in many shapes and sizes, generally they can be grouped as blocks, rods, or ribbons. The general pattern of metal loss is such that rod-shaped anodes may "neck down" near the point of attachment or suspension and a large part of the anode may fall off. For this reason, long slender anodes usually have an iron core which, being itself protected by the anode material, does not corrode, and holds the pieces of anode together, both physically and electrically, until all of the anode material is sacrificed. Block-type anodes, on the other hand, can be bolted in place. Figure 5-1 shows a typical block-type anode installation for protecting a condenser head. Note that the stud is insulated from the anode and electrical connection is made through a resistance washer. Washers are available in 1/4, 1/2 and 1 ohm resistances. When replacing those anodes, use a washer with the same resistance as originally installed. Figure 5-2 shows a method of installing sacrificial anodes in hot water tanks. Domestic hot water tanks usually use vertical rods or sectionalized anodes. The sectionalized anodes are made of magnesium sections on flexible wire. The wire can be bent to allow installation of long anodes where headroom is low. Generally, equipment type anodes should be replaced with similar items. Do not change anode material or anode shape without getting the corrosion engineer's approval. Different anode materials establish different cell potentials and levels of protection. Changes in anode shape change the physical area protected.

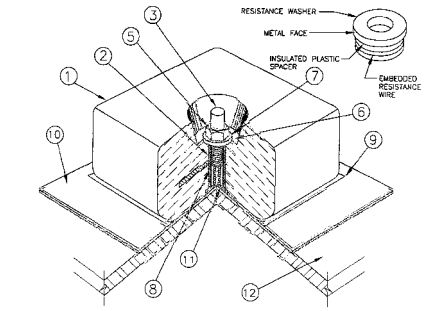

1 & 2. 15-POUND MAGNESIUM ANODE, APPROXIMATELY 8" X 8" X 4", HAVING TWO 1-29/32" X 3/4" PIPE CORE CAST IN CENTER WITH A 1/8" DIAMETER CROSS BAR WELDED TO CORE AND EMBEDDED IN ANODE.

3. PLASTIC STUD PROTECTOR, 1/2", 13 THREADS PER INCH.

4. 1/2" STAINLESS STEEL STUD, EXTENDING 3-5/8" ABOVE SURFACE.

5. 1/2", 13 THREAD FLEX-LOCK NUT.

6. RUBBER GASKET FOR PLASTIC STUD PROTECTOR.

7. RESISTANCE WASHER.

8. RUBBER TUBING, 2" LONG X 1/2" I.D., 1/16" WALL THICKNESS.

9. GASKET SEALER COMPOUND.

10. 1/16" SHEET RUBBER, 10" X 10" WITH 1/2" HOLE AT CENTER.

11. TYPE 304 STAINLESS STEEL STUD ATTACHMENT, TO STEEL-FILLET WELD USING TYPE 310 STAINLESS STEEL ELECTRODE AT 70-105 AMP. TO CAST IRON-DRILL AND TAP IN CAST IRON SURFACE. (NOTE: EXTRA STUD LENGTH REQUIRED FOR TAPPING.)

12. PROTECTED SURFACE.

Figure 5-1

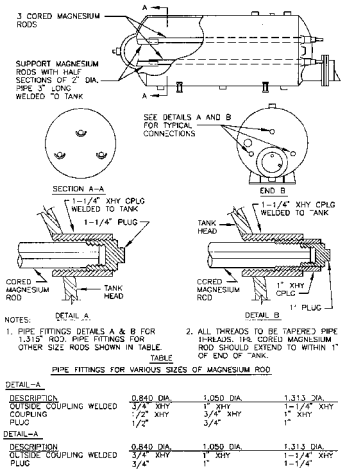

Figure 5-2

5-13. Underground anodes

Installing and replacing anodes in soil includes excavation, placing and backfilling, restoring the electrical connection to the test station or structure, and testing and adjusting the output.

a. Anode installation. Anodes are normally installed in holes augered near to the structure to be protected. Since current output is largely determined by soil resistivity it is desirable to make each hole as deep as possible in an attempt to reach permanent moisture. Whenever possible, anodes should be installed at a lower elevation than the protected structure so that, should the ground water level go down, the anode will remain in conductive moist soil even though the soil around the structure has dried out (see Figures 5-3 and 5-5). In case rock is met, the anode may be placed horizontally above the rock (see Figure 5-4). The anode should be installed at least as deep as the bottom of the structure and a sufficient distance away to give current throwing power (the distance along the pipe that protection is achieved). Anodes attached to coated pipe should be installed at least 2 feet away from the pipe. Anodes installed on a bare structure should be installed at least 5 feet away.

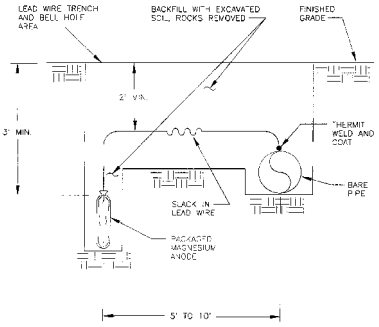

Figure 5-3

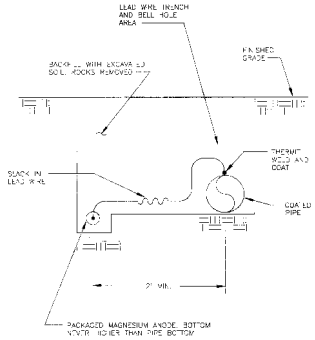

Figure 5-4

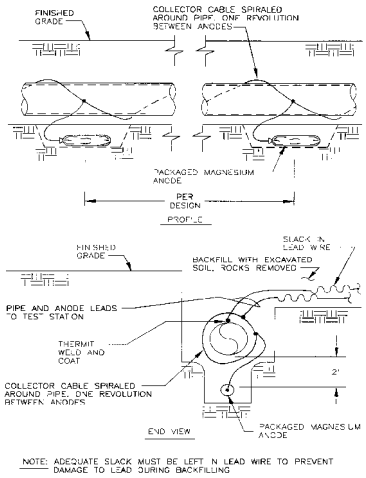

Figure 5-5

(1) To simplify installation and reduce costs, prepackaged anode units have been developed. The anodes are prepackaged in standard anode backfill and must always be used for galvanic systems installed in soil. The backfill serves as a good conductor to allow electricity to flow between the anode and the soil. Installations using galvanic anodes should maintain adequate bench stock of the most appropriate size for the local soil resistivity. Anode installation requires placement of the prepackaged unit in the hole. An additional advantage of the prepackaged unit is that the anode may be installed horizontally and will still be properly centered in the chemical backfill. Horizontal installation may be needed over rock or where only a thin layer of low-resistivity soil is available. Magnesium anodes must be carried as a standby level item where bench stock will not be maintained because of the consumption rate.

(2) Prepackaged anodes are normally shipped in an outer plastic-lined paper bag containing one or more anodes depending on weight. The outer plastic-lined paper bag must be completely removed and discarded before installation of the anode. Only one anode should be installed in an augered hole. The anode should be lowered into the augered hole by grasping the neck of the cloth bag or using a fabric or rope sling. The anode lead wire must never be used to lower the anode into the hole. The hole must be backfilled in 6-inch layers and each layer must be well tamped around the anode. Care must be exercised not to strike

the anode or lead with the tamper. If immediate testing is desired, water may be added only after backfilling and tamping has been completed to a point which completely covers the anode. Approximately 5 gallons of water may be poured into the hole. After the water has dissipated, backfilling and tamping may be completed to the top of the hole.

(3) It is good corrosion control practice to install a magnesium anode in the open hole that has been excavated for repair of a leak if potentials show the level of cathodic protection is below recommended criteria. Installation should be at the maximum distance from the pipe that the hole will allow.

b. Adjusting anode output. When magnesium anodes are installed in a low resistivity electrolyte, the current output may be too high. This excess current may adversely affect structures constructed of metals such as aluminum, zinc, or lead and will cause the anodes to be used up too quickly. If it is necessary to limit the anode current output, a resistor must be installed in the lead between the anode and the structure to prevent the excess current. The actual current needed should be determined by the corrosion engineer. The best way to adjust anode current is by trial, using a piece of nichrome wire as the resistor. Using a movable clip, determine the exact length of nichrome wire needed to properly limit the current, and permanently install that much nichrome wire in the anode structure circuit between the anode lead and the pipe lead. The nichrome wire may be carefully coiled on a pencil and the coil placed inside the test station after removing the pencil. If bare nichrome wire is used, care must be taken not to short the turns of the coils to each other or to the test station.

5-14. Installing test stations

Test stations are necessary for measuring cathodic protection system performance. It is desirable to install all of the anodes on a collector wire through a test station. If this is not possible, one of every ten anodes should be connected to the pipe through a test station. Figures 4-17 through 4-23 show details of typical test stations and anode installations. The overall plan of test stations should be determined by the corrosion engineer. The two types of test stations used are discussed in paragraph 4-20.

a. Above grade stations may be made from a pipe or a weatherproof terminal box and a short piece of electrical conduit fastened to an upright steel or wood post as shown in figures 4-18 and 4-19. The post should extend into the ground 2 or 3 feet or more to give adequate protection against damage from moving equipment. It may also be desirable to extend the post above the box and paint it a conspicuous color so that it is visible at all times.

b. Flush mounted stations may use test boxes as shown in figure 4-20.

5-15. Protection of anode lead wires

a. Prior to any excavation work in an area, all underground wires should be located and staked out, to avoid damage.

b. Plastic warning tape must be installed in the ditch above the anode lead wires. The warning tape should be located 6 to 8 inches below the surface. The warning tape replaces the wooden board as a protective warning for direct buried lead wires.

5-16. Welding and splicing electric conductors

Since cathodic protection systems are electrical, it is important that the current be allowed to flow where it is needed without unnecessary loss or restriction. The two usual causes of loss and restriction are high-resistance connections and poorly insulated connections. Connections to the structure will be exothermic welded or brazed and then insulated from the electrolyte. Conductor splicing should be avoided where possible. Permanent conductor splices should be accomplished by exothermic welding or crimped pressure connection with proper compression tools.

a. The simplest and best method of attaching leads to structures and getting a good electrical connection is the exothermic welding process such as Thermit™ welding. Exothermic welding is a means of permanently fastening copper conductors to steel or iron structures or to another copper conductor. Powdered copper oxide and aluminum are burned to produce heat and molten copper. The molten copper flows over the conductor and the structure, permanently welding them together. The equipment is light and portable, and no outside source of heat or power is needed. The exothermic welder must be of the proper size for the pipe and wire size encountered. Figure 5-6 shows a sectionalized view of an exothermic welding apparatus. Underground splices usually can be adequately insulated by three wraps of insulating electrical tape.

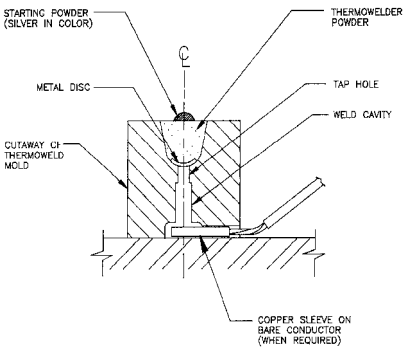

Figure 5-6

b. The completed exothermic weld and exposed copper wire must be coated with an exothermic weld cap filled with mastic (see Figure 5-7). The cap must not be installed until after the weld has cooled sufficiently to prevent the mastic from melting or burning.

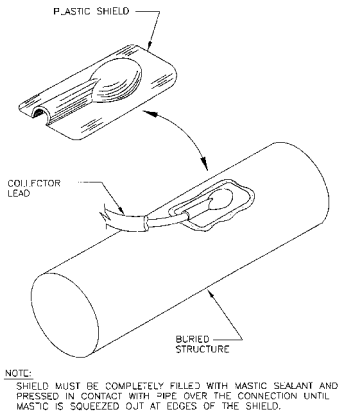

Figure 5-7

Section III. Impressed current system

5-17. General

The operation and maintenance of impressed current cathodic protection (ICCP) systems includes placing the system in service initially and then performing routine inspections including visual checks, rectifier inspection, electrical measurements, and correcting deficiencies found during inspection. These duties will be performed by the corrosion control engineer and the cathodic protection technician.

5-18. Placing the system in service

In order to get the best performance from an impressed current system, it should be checked and adjusted in the following manner at the time it is first placed in service:

a. Underground piping systems

(1) Prior to energizing the rectifier, determine structure-to-soil potentials at all service line risers, all perimeter points, at locations closest to groundbed and at points every 1,000 feet where risers do not exist. Determine structure-to-soil potentials on all metallic piping systems that are not included in the protected system and are within 500 feet of the groundbed. Record the locations and the test data for future reference.

(2) Set the rectifier voltage to the lowest taps. Visually check to assure that the anode conductor is connected to the positive terminal and that the structure conductor is connected to the negative terminal. Then energize the rectifier.

(3) Increase current output by changing the rectifier taps one step at a time to reach design current. WARNING! After each increase, measure structure-to-earth potential over the structure closest to

the groundbed to assure that the potential increases in the negative direction, and that the potential does not exceed the maximum limit (see Paragraph 3-18).

(4) Repeat structure-to-soil potentials at points designated in (1), above.

(5) Adjust the rectifier output to obtain a minimum recommended protected potential at perimeter points of the system to assure adequate protection (not to exceed criteria limits at any point on the system).

(6) Repeat structure-to-soil potentials at all points designated in (1), above, after the rectifier has operated for 30 days. Polarization will have occurred during the 30-day operating period. The rectifier should be readjusted if needed to get complete protection of the structure.

(7) Conduct cathodic interference tests and install required interference bonds as described in paragraph 5-35. Interference bonds may reduce the effective protection of the structure. To assure adequate protection, tests at perimeter points should be repeated after interference bonds are installed. Any necessary rectifier adjustments should be made.

(8) Record all data for future reference.

(9) Identify all areas that are not receiving adequate protection, and take required ccorrective action.

b. Underground tank systems.

(1) Prior to energizing the rectifier, determine tank-to-soil potentials at perimeter points on the tanks and at, a minimum of two points over the tank centerline. These are baseline or "native" potential measurements. Figure 5-8 depicts typical locations for measurements on a group of underground storage tanks. Some systems have incorporated the installation of permanent reference electrodes adjacent to the tanks (Figure 5-9). A measurement should be made on each of these reference electrodes.

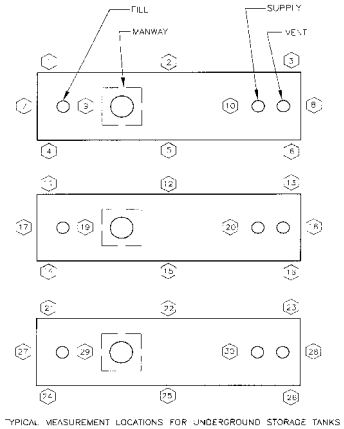

Figure 5-8

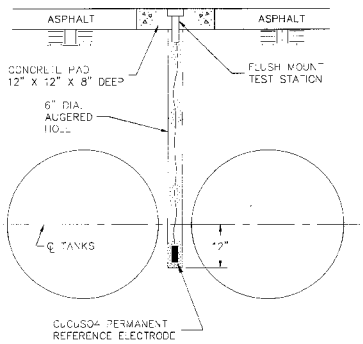

Figure 5-9

(2) Adjust the rectifier to the lowest taps, visually check to assure that the anode conductor is connected to the positive terminal and that the structure conductor is connected to the negative terminal, and then energize the rectifier.

(3) Increase current output by changing the rectifier taps one step at a time to reach design current. Measure structure-to-earth potential at each location where baseline or "native" potential

measurements were taken. WARNING: In order to verify that all components of the system are receiving the benefits of cathodic protection, electrical continuity must be tested, utilizing the procedure outlined in (4), below.

(4) Verify electrical continuity of all components of the storage system, by inserting a current timer-interrupter (Figure 5-10) in series with the rectifier positive terminal, cyclically applying the current to the anode system (Turn rectifier off while connecting interrupter). See figure 5-11 for hook-up of interrupter. While current is cyclically applied to the anode system, measure potentials between a stationary reference electrode, and each of the components of the storage tank system. Figure 5-12 shows typical measurement locations. Other methods for testing continuity involve resistance measurements, which are one of the basic tools of nearly every type of corrosion control survey. The standard four-wire voltmeter-ammeter hook-up is used for this measurement with two leads on each structure. Resistance equals ▲E/I in accordance with Ohm's Law. If separate connections are not used, the lead resistance will be included in the calculated resistance between points and introduce erroneous data. The following paragraph should be included in all maintenance, repair, or construction contracts and must be adhered to when work is done by the civil engineering forces: "All non-isolating underground metallic pipe joints, other than screwed or welded, must be bonded using a No. 4 AWG polyethylene sheath copper conductor. The conductor must be attached to the pipe by the thermit welding process. The area of the weld must be coated with the same material as used to protect the pipe or a heavy overall coating of coal tar enamel or epoxy resin mixture suitable for this use". Properly coating the area where the wire is attached to the pipe is a "must" to prevent corrosion caused by the dissimilar metals of the wire conductors and the pipe.

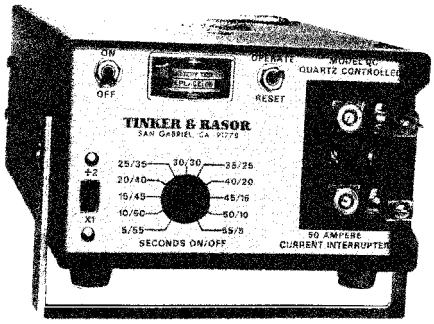

Figure 5-10

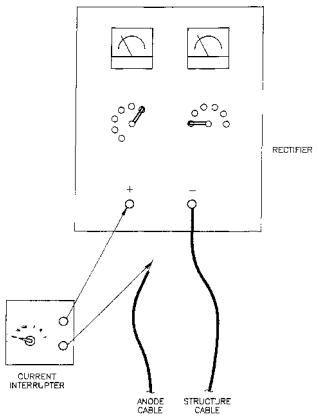

Figure 5-11

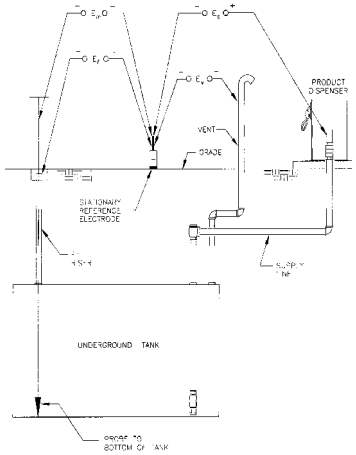

Figure 5-12

(5) If any discontinuity is indicated (no potential shift or shift of opposite polarity), the system must be shut down and not operated until the necessary continuity bonding is performed.

(6) After any needed repairs are made and it has been verified that the storage tank system is electrically tied together, turn the rectifier on and take a set of "energized" potential measurements at all locations where "native" potential measurements were taken.

(7) Operate the system for 30 days and repeat the measurements. After taking "energized" potential measurements, place the reference electrode at each location and turn the rectifier off briefly, just long enough to measure an "instant-off" potential and re-energize the rectifier. This allows measurement of the extent of cathodic polarization which has been achieved by the operation of the system.

(8) If any of the "instant-off" potential measurements exceed the potential limits discussed in paragraph 3-18a, the rectifier output should be decreased. If, on the other hand, the "instant-off" potential is less than 100 mV more negative than the "native" potential at one or more points, the rectifier output should be increased.

(9) The rectifier output should be adjusted until the "instant-off" potentials are uniformly 100 mV more negative than the "native" potentials. If uniform potential levels are not encountered, more anodes may need to be installed to improve current distribution characteristics. Voltage measurements on pipelines are to be made with the reference electrode located on the electrolyte surface as close as practicable to the pipeline. Such measurements on all other structures are to be made with the reference electrode positioned as close as feasible to the structure surface being investigated. Consideration should be given to voltage (IR) drops other than those across the structure-to-electrolyte boundary, the presence of dissimilar metals, and the influence of other structures for valid interpretation of voltage measurements.

(10) Conduct cathodic interference tests and install required interference bonds as described in paragraph 5-35. Interference bonds may reduce the effective protection of the structures. To assure adequate protection, test representative test points after interference bonds are installed. Any necessary rectifier adjustments should be made.

(11) Record all data for future reference.

(12) Check rectifiers monthly, to see if pre-established parameters of D.C. voltage and current are within specified tolerances.

(13) Test the system again, six (6) months after start-up, to properly balance the system and fine tune any adjustment.

(14) Repeat the basic measurements one year after commissioning, then annually thereafter. Evidence of proper functioning may be voltage and current output, and normal power consumption as well as a check for electrical shorts, ground connections, meter accuracy, efficiency and circuit resistance.

c. Internal surfaces of water storage tanks. Generally, these systems are installed and initially energized and adjusted by outside contractors. The system operating characteristics must be documented and Operation and Maintenance Manuals should be provided by the Contractor. The testing procedures to be used are as follows:

(1) Obtain the following data for each rectifier with the power on:

(a) Potential control setting and meter readings.

(b) Operating current (via shunts) and operating voltages.

(2) With rectifiers still on, measure "on" potentials using the installed permanent reference electrode or submersible copper-copper sulfate reference electrodes, using at least two recording voltmeters.

(3) Turn the rectifier off and obtain depolarization measurements, using the above reference electrodes and recorders.

(4) Obtain resistance measurements between the structure and anodes.

(5) Turn the rectifier on.

5-19. Rectifier inspections

Monthly inspections of cathodic protection rectifiers must be made to make sure that the units are operating as intended for their specific purpose. The inspections should include measurements of current and voltage output and a check of components for damage or deterioration. Oil-immersed rectifiers require the following additional inspection:

a. Make an annual check of the oil condition on a clear, dry day.

(1) Shut off the rectifier.

(2) Open the drain cock located at the bottom of the oil reservoir and slowly drain oil into a clean glass vessel. If water is visible in the vessel, continue to slowly drain the liquid until the water is extracted from the reservoir.

(3) Check the level of the oil inside the rectifier case. If oil must be added to maintain the proper level, use only clean transformer oil taken from a sealed container.

(4) Inspect the oil for clarity. If the oil is cloudy, or has debris in it, it should be replaced with the proper grade of transformer oil.

(5) Check gaskets on rectifier cases once a month. Replace gaskets promptly to avoid contamination of the oil with dust or moisture.

5-20. Output measurements

Figure 5-13

The first step in conducting a rectifier inspection is to record the rectifier number, location, voltage, current and voltage ratings and "as-found" tap settings. Most rectifier assemblies include both a voltmeter and an ammeter for measuring applied voltages and currents. Some meters are permanently connected into the circuit, which allows the voltage and current to be continuously read. Other meters are normally disconnected from the circuit and are energized by pressing a switch or button. When using a "press to read" switch, press and release the switch slowly three to four times before recording the readings. Because these switches are idle for long periods between use, the contacts sometimes do not seal properly and may make a high-resistance connection. Actuating the mechanism carefully several times allows the establishment of good electrical contact. Compare the rectifier output readings with those of the previous inspection. Adjust the voltage, if necessary, to maintain the required current output. Any significant change in current indicates either a component failure in the rectifier or a change in the system or system environment. After reading and recording the rectifier panel readings, use external meters to measure the voltage and current, as discussed in paragraphs 4-2 and 4-3. The AC current can be measured with a clamp-on ammeter (Figure 5-13). Calculate the DC and AC power, using the equations:

P(Power) DC = E(voltage) DC x I(current) DC
PAC = EAC x IAC

The rectifier efficiency percentage (Rect.% Eff.) is then calculated by the equation:

$$\text{Rect. \% Eff.} = \frac{PDC}{PAC} \times 100$$

5-21. Component inspections

Inspection of the individual rectifier components should be made to ensure that all parts are operating properly to maintain protection of the structure.

a. Stack temperature. After turning the unit off, immediately feel the rectifier stacks to determine if they are operating properly. Operating stacks should be warm. Cold stacks indicate they are not operating. In either a full-wave or full-wave bridge rectifier circuit failure, one rectifier stack operating will cause the unit to operate as a half-wave rectifier. This situation can be determined by feel because half of the stacks will be warm and half will be cold.

b. Contact temperatures. Any mechanical connection in a rectifier assembly can become loosened and cause a high-resistance joint. A high-resistance joint heats up, causes oxidation which results in more heating and more oxidation, and so on, until failure. After the unit is turned off, feel the electrical connections for warm or hot joints which are an indication of high contact resistance.

c. Filter inspection. Some rectifiers include DC filters to smooth out the rectified current. These filters generally include a choke and two capacitors. Visually inspect these items and then check for overheating. The capacitors are likely to be fused, and the fuses should be checked.

d. Arc paths. Look over the components for burn marks or arc paths caused by an electric arc jumping from one conductor to another. These arcs may be caused by lightning surges, water entering the unit, or insulation breakdown from age or physical damage.

e. Cleanliness of stacks. The life of a rectifier stack is dependent mostly on the temperature at which it is operated. Proper cooling is essential to achieve satisfactory stack life. Accumulations of dust, dirt, insects, bird nests, and the like in the unit interfere with stack cooling and thus cause premature stack failure. Most units are ventilated through screens with fairly small openings (about one eighth of an inch). Accumulations which interfere with the stacks, or with the passage of air through the screens, should be removed. If it is necessary to clean the stacks, use a soft brush or cloth. Be extremely careful not to scratch or bend the rectifier stack plates.

f. Automatic control circuits. Many rectifiers, particularly on water storage tanks and related equipment, have automatic control circuitry which may periodically malfunction. If the automatic function of the controller is not operating normally, the first step is to switch the rectifier to the "manual" mode, and check for current and voltage output. The unit should not be left in "manual" operation for extended periods of time, as this may result in overprotection and coating damage. If the rectifier is placed in manual operation, it should be adjusted to a low current output. The control unit should be inspected for obvious problems, such as blown fuses, or overheating of components. This would be revealed by burn marks on the printed circuit card inside the controller unit. The circuit card should be replaced and the rectifier/controller re-set to "automatic" operation. The manufacturer's recommendations for restoring operation and re-adjustment of the unit should be consulted.

5-22. Potential measurements

Potential measurements should be repeated at key points throughout a cathodic protection system each year. The location of measurements should be as follows, for the various types of systems:

a. Impressed current systems - piping systems. Take potential measurements at all test stations, distribution risers, crossings with foreign structures and at maximum interval of 500 feet as detailed in paragraph 4-17.

b. Impressed current systems - underground storage tanks. Take potential measurements at all

locations tested when the system was first energized. After taking energized potentials, measure "instant-off" potentials (see Figure 5-9 for typical measurement locations).

c. Impressed current systems - elevated water tanks. Take potential measurements at three depths, at least four equally spaced locations around the bowl, and at every 10 feet down the riser (see Figure 5-14). To accurately assess polarization effects and limit the IR drop error inherent in "energized" potential measurements on water tanks, "instant-off" potentials should be recorded at each location.

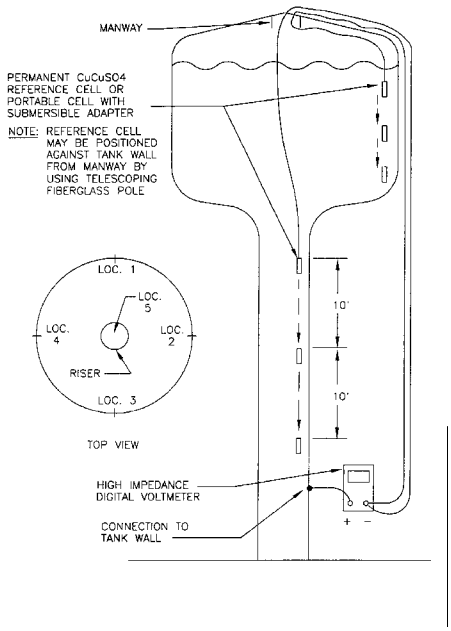

Figure 5-14

5-23. Annual meter tests

Meters in each rectifier unit should be checked for accuracy each year. A portable instrument of known accuracy is used to check the unit rectifier meters by measuring the voltage across the output terminals and comparing the reading with that of the rectifier meter, and by inserting the test ammeter in the output circuit and comparing its reading to that of the rectifier ammeter. The test voltmeter should be at least as sensitive (in ohms per volt) as the rectifier voltmeter being checked. The test ammeter should offer less resistance to the circuit than does the rectifier ammeter.

a. The differences in voltages (or currents) as read by the two meters should not exceed the accuracy limits of the two meters together.

(1) For example: Using a 50 volt voltmeter accurate to 1 percent of full scale to check a 30 volt voltmeter rated as accurate to 2 percent of full scale, the allowable error is:

1 percent of 50 volts = 0.5 volts
2 percent of 30 volts = 0.6 volts
TOTAL = 1.1 volts (allowable error)

(2) If the difference in readings exceeds 1.1 volts (and the test meter is known to be within its rated accuracy) the unit meter should be replaced.

(3) The above method of calculation of allowable accuracy is also used to determine allowable error in ammeters.

b. Because meter accuracies are measured in terms of full-scale readings, always try to use a meter range which will give readings in the upper third or half of the scale. To illustrate, assume a 100 volt voltmeter accurate to 1 percent of full scale (within 1 volt):

	Full Scale	½ Scale	1/10 Scale
Actual Voltage	100 volts	50 volts	10 volts
Measured Voltage	99 volts	49 volts	9 volts
Error	1 percent	2 percent	10 percent

In each instance above, the meter is performing within its rated limits of accuracy. However, at the lower end of the scale, it is reading 10 percent off actual voltage. All rectifiers should have a shunt mounted on the front panel to allow the accuracy of the current output to be checked. The shunt will be marked as to the amps or millivolt rating which should be used in calculating the current. Some readings cannot be made without removing cabinet panels to prevent meter damage. Observe the same safety practices as when inspecting other electrical equipment. The cause of rectifier failure may have left hazardous conditions not usually met in electrical equipment.

5-24. Troubleshooting

If inspection reveals that a unit has failed (or is near failure) the troubleshooting procedure should be followed to locate faulty components and restore the rectifier unit to operation. The simplest means of troubleshooting is to follow the flow of electricity through the rectifier unit, component by component. Figure 5-15 shows the sequence of checking through a rectifier with a voltmeter using nine tests. This same procedure can be used on any rectifier circuit from a single-phase, half-wave unit to a three-phase bridge. Be sure to use AC meters on the AC side of the stacks and DC meters on the DC side of the stacks. Table 5-1 shows the voltage test sequence for troubleshooting a rectifier.

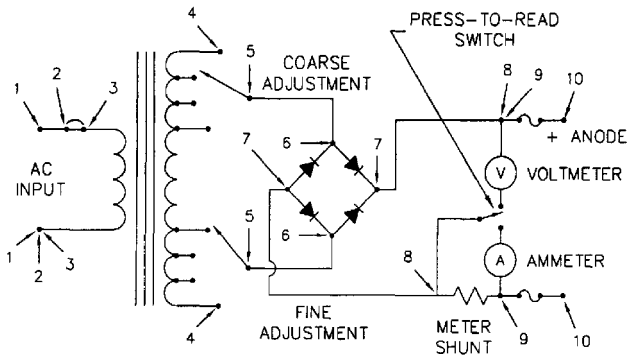

Figure 5-15

a. Before troubleshooting a unit, study the circuit diagram furnished with the manufacturer's instructions that are mounted in the rectifier cabinet. If no circuit diagram is available, it is usually worthwhile to trace out the circuit and develop a diagram. A copy of the circuit diagram should be filed with other record drawings.

b. Voltage test points are not limited to those shown in figure 5-15. Intermediate points can and should be checked in a search for loose connections and broken conductors.

c. Precautions - turn off rectifier by throwing the AC circuit breaker and the outside disconnect switch before touching parts to check for heat buildup on loose connections. Be sure the test meters are properly connected and the range selected is high enough.

Table 5-1
Voltage Sequencefor Rectifier troubleshooting (See Figure 5-17)

Probe Points	Measurement Indicates
1-1	AC voltage from the disconnect switch
2-2	AC voltage to the circuit breaker or fuse
3-3	AC voltage to the transformer primary winding
4-4	AC voltage through the transformer
5-5	AC voltage through the tap adjustment connections
6-6	AC voltage to the rectifier stack
7-7	DC voltage from the rectifier stack
8-8	DC voltage to the metering terminals
9-9	DC voltage to the protective fuse terminals
10-10	DC rectifier voltage output

5-25. Troubleshooting procedures

The following are the troubleshooting procedures to be used for locating the cause of reduced or interrupted rectifier output:

a. If no output voltage is indicated on the rectifier meter, make the following checks and repairs as necessary:

(1) Check the AC circuit breaker, DC fuses, and AC disconnect switch and fuses. If the circuit breaker or fuses are blown, check the reason for the interruption and make the necessary repairs.

(2) Check for evidence of lightning damage or excessive heating in the rectifier cabinet. Also, strange colors indicate heat damage.

(3) Check the DC output voltage with the multimeter connected across the rectifier output terminals. If no voltage is indicated, repair the meter or wiring.

(4) Check the DC fuses, fuse holders, and connections.

(5) Check the disconnect switch for supply voltage, blown fuses, or loose connections using an AC meter. If no disconnect switch has been installed, have one installed.

(6) Request the appropriate electric shop to repair power source trouble if AC voltage is not available to the disconnect switch.

(7) When voltage is available from the disconnect switch but not the rectifier stacks, open the disconnect switch and check for continuity through the AC circuit breaker. Trouble may be in the switch, the wiring, or terminal connections.

(8) Check the AC power supply through the transformer to the rectifier stacks by measuring the AC voltage across the fixed center terminals of the coarse and fine adjustment tap bars (Caution: Do not make this check in an oil-cooled rectifier when terminals are submerged).

(9) Check the rectifier stack for DC output voltage. If there is input voltage but no output voltage and all terminal connections are tight, the stacks may be defective and should be checked for opens or shorts.

b. If the DC voltage is normal at the rectifier output terminals, but no current flow is indicated on the ammeter, make the following checks:

(1) Check for current output with the multimeter. The ammeter may be defective, the current may be too small to register on the meter, or connections and wiring may be defective.

(2) If no current is flowing, there is an open circuit in one of the external DC leads. Look for recent excavations between the rectifier and both the anode bed and the structure.

(3) If the open circuit is in the buried cable to the anode bed, it may be found using a pipeline locator or by making an over-the-cable potential survey with the rectifier set for minimum voltage. The negative terminal of the high resistance voltmeter should be connected to the negative (to structure) DC output of the rectifier while the copper-copper sulfate electrode is moved over the route of the buried cable.

(4) In water storage tanks, the open circuit may be at the negative lead connection to the tank or in the conductor to the anodes. Also, the anodes may be consumed, the conductor may be broken with the anodes lying at the bottom of the tank, or the anodes may be above the low water level. Generally, a visual check will reveal these conditions.

c. If the output voltage is normal and the amperage is noticeably lower, check to determine if some of the anode bed has been lost through excavation or deteriorated connections. Check as in b.(3), above.

d. If the output voltage is normal and the amperage decreases slowly over a long period of time, the anode bed resistance has increased due to gas blockage, dry soil, or depleted anodes. Soak the anodes by flooding the area to restore the electrolyte. If the low current persists, carefully uncover the tops of the anodes (do not damage anode leads or header cable) and backfill the anode with pea gravel from the top of the coke breeze to within 6 inches of the grade level to allow gas dissipation. If the anodes are approaching their design life, the first in the string may be excavated for inspection to determine if the anodes need replacing.

e. If the output voltage is very low, the amperage is very high, and the structure is not protected, the DC circuit is shorted. Check the circuit in the rectifier and at the output terminals.

f. Some rectifier circuits include capacitors, fusing, lightning arrestors, current control rheostats, and noise interference filters. If this equipment fails, it may be necessary to remove it from the circuit until replacement can be made. The capacity of the component must be considered when making a replacement, particularly where evidence of heating is found.

g. The most frequent impressed current system troubles are blown fuses, loose terminals, lightning damage, faulty meters, and open circuit breakers.

5-26. Impressed current anode replacement - underground

a. Impressed current anodes are discussed in chapter 2, paragraph 2-9. The replacement of impressed current anodes in soil is similar to the replacement of galvanic anodes described in paragraph 5-13. Impressed current anodes are usually installed in "groundbeds" rather than individually. The chemical backfill used is coke breeze rather than gypsum and bentonite. See figures 5-16 and 5-17 for examples of proper impressed current anode installation. Care should be taken not to "mix" impressed current anode types, so replace anodes in kind, unless an entire groundbed is being replaced.

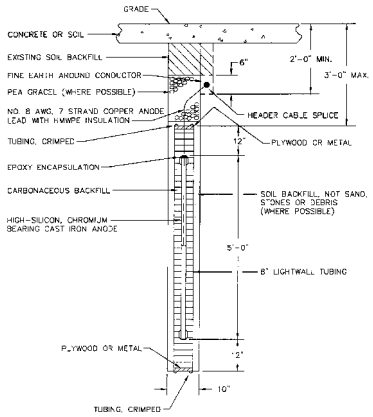

Figure 5-16

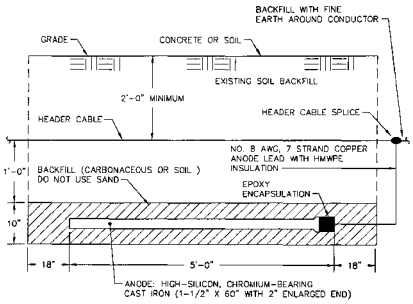

Figure 5-17

b. The lead wire-to-anode connection is the most critical portion of the anode assembly. The anode tends to deteriorate faster on the ends than in the center. If the deterioration exposes the anode lead, an open circuit will result at the lead wire connection. To prevent that from happening, epoxy encapsulation of the lead wire connection should be specified when ordering impressed current anodes. Underground electrical splices must be insulated with an epoxy splice kit (see Figure 2-28). To reduce premature failure of lead wire or wire-to-anode connections, several improvements in materials have been made and have recently become commercially available. One is an insulation for impressed current anode lead wire that is more resistant to chlorine gas generated by the electrochemical reaction at the anode. This insulation is a fluoro-copolymer called Halar™ and is not very resistant to mechanical damage, so it is manufactured with an outer layer of high molecular weight polyethylene (HMWPE). This combination is known as Duralar™ and consists of 20 mils of Halar™ over seven-strand, tin-coated copper conductor with an outer jacket of 80 mils of HMWPE. Another improvement in materials is the manufacture of cast iron anodes with the wire-to-anode connection made in the inside of the center of the anode, as depicted in figure 2-11. This type of anode is less prone to failure at the lead wire-to-anode connection, because the connection is inside the center of the anode tube, away from those areas prone to accelerated corrosion deterioration.

5-27. Anode replacement for water storage tanks

a. Icing conditions. Formation of ice will actually tear the tank anodes from their mountings. It is advisable to remove the tank anodes before the ice cake forms in early winter and reinstall the anodes in the spring when the danger of ice formation has past. Long life "hoop-type" platinized niobium or mixed metal oxide anode systems are now used where ice is a problem. Where mild icing occurs, high-silicon cast iron anodes may be used. Figure 5-18 shows a typical aluminum anode system. Figure 5-19 shows a typical high-silicon cast iron system, and figure 5-20 shows a typical platinized niobium or mixed metal oxide "hoop-type" system. Anodes should only be replaced "in kind" in water tank systems.

b. Aluminum anodes. Aluminum anodes used in water storage tanks are normally designed for a 1-year life, and must be replaced routinely. Aluminum anodes were previously recommended only in the colder climates where ice cakes move up and down with changes in water level.

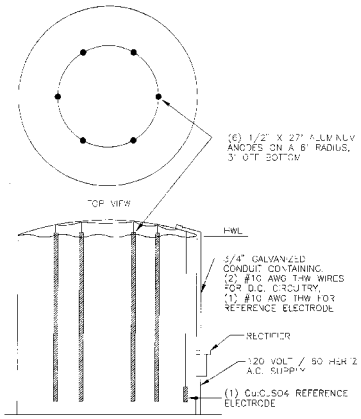

Figure 5-18

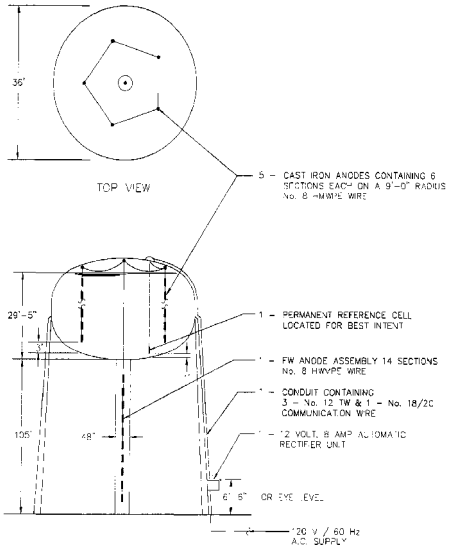

Figure 5-19

c. High silicon cast iron anodes. High silicon cast iron anodes typically last from 5 to 10 years, unless ice damage causes premature failures. The construction of typical anode "strings" for water tanks usually requires the entire string to be replaced, when one or more anode segments have fallen off. It is not possible to make a sufficiently reliable underwater splice which can withstand the weight and the water intrusion into the splice. For these reasons, the entire anode string should be replaced. The original string should be disconnected from the header cable by accessing the connection through the access port in the roof of the tank. The new anode string should then be lowered into the tank through the access hole, and should be spliced into the header cable. A water-proof splice should then be made, using a split-bolt connector, rubber electrical tape and PVC electrical tape.

d. Platinized niobium and mixed-metal oxide wired anodes. These anode systems generally have a service life of 20 years. USACERL has developed "ceramic" anodes which are detailed in ETL 1110-9-0(FR). Generally, the anode itself is not as prone to damage or failure as is the mounting or support assembly. During extremely cold winters, large ice formations can cause the eyerings supporting the anode hoop to be pulled from the tank wall. Repairs to these assemblies can be made while the tank is drained, and the anode system can be re-strung. Check that there are no breaks in the anode wire or cable splices, etc. Check the permanent reference electrode used to control the operation of the automatic controller which maintains the potential, and replace the electrode if it is defective (visually damaged or reading lower than a temporary copper-copper sulfate electrode placed in the tank).

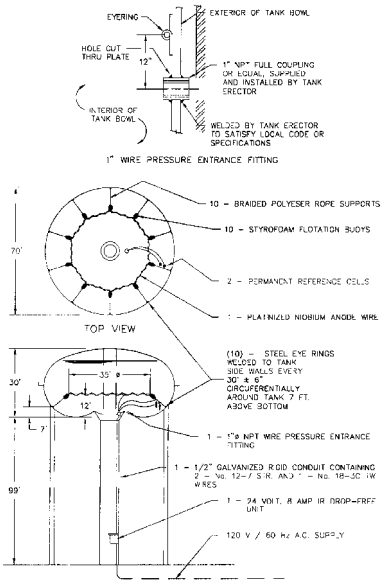

Figure 5-20

5-28. Other system component replacement

In addition to anodes, various other components periodically need to be replaced. These include:

a. Test Stations. Test Stations in heavy traffic areas are prone to damage. Generally, the above grade type test station can be damaged by vehicular traffic, snow plowing operations, etc. These test stations should be replaced with similar type test boxes, conduit, etc. and the wiring should be replaced. Color coding and test box wiring should be maintained like the original. Grade level test stations should be repaired by replacing the terminal board and lid as needed. Re-wire the new parts in similar manner to the existing terminal board.

b. Insulating Materials. Some impressed current cathodic protection systems rely on the protected structures being electrically isolated from other piping systems. All insulating fittings should be maintained in effective operation and should be replaced if defective. Generally, flange insulating kits can be repaired by replacing defective insulating sleeves and washers. The insulating gasket should not be replaced unless absolutely necessary. When repairs to piping are made, and the flange is disassembled, the flange insulating kit, including the insulating gasket, insulating sleeves, and insulating washers must be replaced.

DO NOT FORCE BOLTS INTO THE FLANGE. MAKE SURE THE FLANGES ARE PROPERLY ALIGNED. All insulating sleeves and washers must be in place and in good condition in order for the insulator to be effective.

c. Rectifiers. Rectifiers should be serviced and tested in accordance with the troubleshooting procedures listed in paragraph 5-25. Any component (transformer, rectifier stack, meters) should be replaced with the specified replacement part. These parts are available from the rectifier manufacturer.

5-29. Interference problem testings and control

In areas where interference currents are suspected, appropriate tests should be conducted. All affected parties should be notified before tests are made for the purpose of establishing an interference bond. (Notification should be channeled through Corrosion Control Coordinating Committees, where they exist). Cathodic protection interference occurs when buried or submerged metallic structures pick up or collect current from a cathodic protection system without being electrically connected to the structure that is cathodically protected, or to the cathodic protection system itself. The metallic structure which is not electrically connected to the cathodic protection system is usually called the foreign structure. The foreign structure may, or may not, have its own cathodic protection system. Usually, the foreign structure must be physically located near (0-2,000 feet) the groundbed of the cathodic protection system causing the interference, and either cross or come close to the protected structure. However, the exact point of interference may be located several miles away. The chain of events which normally occurs in interference problems is as follows:

a. Direct current from the groundbed is collected on the foreign structure in the area where it is closest to the groundbed. The magnitude of the length over which the foreign structure will collect the current can vary from several lineal feet to several miles.

b. The area of the foreign structure that is collecting the current is actually under cathodic protection. The structure-to-soil potential measurements will reflect a protected structure.

c. The current that is collected will travel along the foreign structure until it reaches the path of least resistance. The location of the path of least resistance could be only several feet away from the point of collection or it could be several miles away. When the current reaches the path of least resistance, it will leave the foreign structure, travel through the electrolyte (ground), and be collected by the protected structure and returned to the source - the rectifier. Figures 5-21 and 5-22 illustrate two different mechanisms of interference from an impressed current cathodic protection system which could occur. Figure 5-21 depicts "cathodic interference" which results from the large cathodic gradient around the protected pipe, causing current to discharge from the foreign structure. Figure 5-22 illustrates "anodic interference", caused by

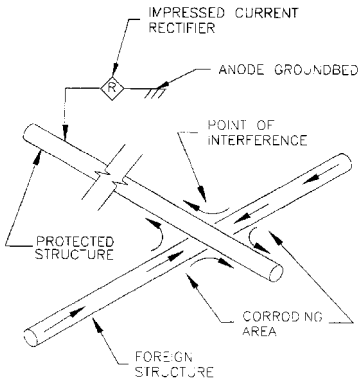

Figure 5-21

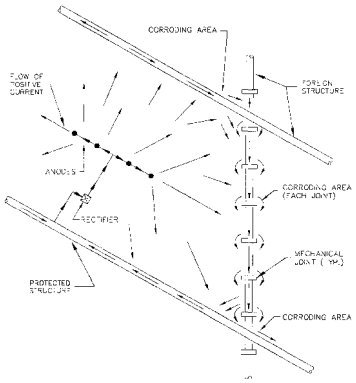

Figure 5-22

current picked up on the foreign structure, which flows along the structure until it reaches a low resistance path back to the protected structure.

d. The area where the current leaves the foreign structure will corrode rapidly. This is the actual point of interference. The structure-to-soil potential measurements at that point will be more positive when the rectifier is operating than it is when the rectifier is not operating. If the foreign structure is not cathodically protected, the potential measurement will be less (more positive) than -.85 volts. If the foreign structure is cathodically protected, the structure-to-soil potential may be above (more negative) than -.85 volts except where the current leaves the structure because of interference. Where the current leaves the structure to enter the electrolyte, the potential will be less than its original (with no cathodic protection). There is always a chance that interference will be caused by impressed current systems. The larger the current output, the more likely that interference will occur. All metallic structures near the groundbed should be checked for current collection. This can be performed by connecting a current interrupter to the rectifier and performing potential measurements on all underground structures. Interference can be expected whenever the potential measurements change as the rectifier cycles on and off. Listed below are several underground structures that are often ignored when installing cathodic protection systems. It is recommended that each of these facilities be checked to determine if interference exists:

(1) Lead covered communication cables

(2) Lead covered electrical cables

(3) Fences

(4) Cast iron piping systems

(5) POL pipelines

(6) Pneumatic tube systems

(7) Non-government owned pipelines

(8) Underground storage tanks

5-30. Interference bonds

An electrical connection may be needed between the foreign structure and the protected structure to alleviate cathodic interference. This electrical connection is called a "bond". There are two types of bonds: A 100 percent bond and a resistance bond. The 100 percent bond allows all of the current that can collect on the foreign line to flow back to the rectifier. The resistance bond only allows a portion of the current to flow through the bond. The purpose of the resistance bond is to limit the amount of current collected on the foreign structure. There are two reasons for limiting the current flow:

a. The current flow should be limited if the potential exceeds the maximum allowable for the metal of which the foreign structure is composed. If the resistance needed to alleviate cathodic interference is not enough to restrict the current collection so that the maximum potential of the foreign structure is not exceeded, the current output of the rectifier causing the interference should be reduced. An alternate method for control of interference could be accomplished by moving the groundbed.

b. The current flow should be limited if the foreign structure is not owned by the government or does not require cathodic protection. The purpose of this limitation is to conserve power consumption and reduce operating costs.

5-31. Structure-to-earth potential survey profile

In the course of conducting a structure potential survey of a long pipeline, it is particularly helpful to plot the survey results in a graph form. A typical survey profile is shown in figure 5-23. As illustrated, the potential measurements, with respect to a copper/copper sulfate electrode, were taken over the route of pipeline T-4 at approximately 50 foot intervals. The plot of potential measurements when coupled with a plan view of the pipeline, sometimes clearly indicates the reason for high or low potentials and possible corrosion areas - "possible" in that other factors such as soil resistivity may also be involved.

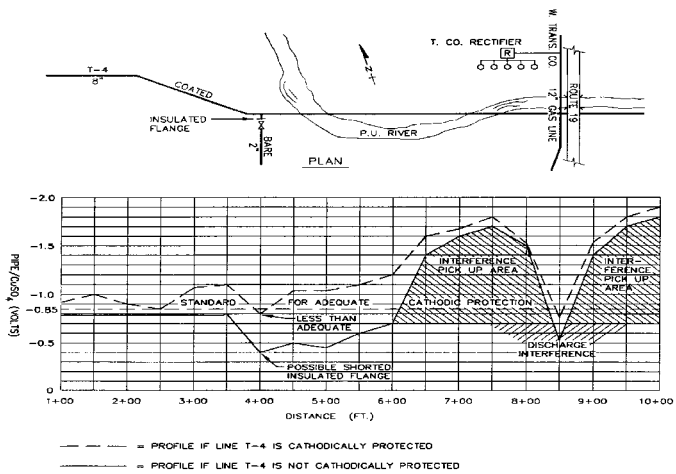

Figure 5-23

a. Following the lower solid graph line (pipeline with no cathodic protection) the potential is at a fairly constant level and dips to -.40 volts at a pipeline side connection at station 4+00. From the plan view, note that an insulated flange is present. The lower potential at that point may indicate shorted insulation or an area of bare piping. The potential again rises and begins to increase sharply becoming cathodically protected from the nearby rectifier as it approaches the "foreign" pipeline (W. Trans. Company). Pipeline T-4 is in a "pick-up" area. At the pipeline crossing (Station 8+50), the potential drops sharply indicating a cathodic interference discharge point. Corrosion could be severe at that point without an interference bond. On the other side of the crossing the potential rises again into another "pick up" area.

b. Following the higher broken graph line (pipeline with cathodic protection) the potentials are raised above that of the unprotected line; however, at the side connection (Station 4+00), a low point (-.80V) is observed. Again, the insulated flange may be shorted and require replacement or additional cathodic protection may be needed. Following the graph, the potential in the interference "discharge" area is below -.85V; that is, -.75V. Current "discharge" or corrosion could be occurring at that point.

c. From the above explanation, much can be learned from plotting such a potential survey profile. Use of this method is highly desirable and, at times, mandatory for understanding potential survey results.

d. Another useful tool for analyzing and pinpointing corrosion interference problems is the measurement of IR (voltage) drop. By measuring the voltage drop between two test points or connections on a pipeline, it is possible to calculate the quantity of current flowing on the structure and its direction of movement. This procedure is used to indicate where current is being picked up or lost on a structure. Figures 5-24 and 5-25 describe the calculation method and provide necessary data.

5-32. Locating the interference point

Pipe Line Current Flow Data
IR-Drop Tables

Current Flow in 1 MV Drop					
Pipe Size	Ohms 1000 Ft.	In 1 Ft.	In 25 Ft.	In 50 Ft.	In 100 Ft.
3/4"	0.1910	5.24	0.210	0.105	0.052
1"	0.1290	7.75	0.310	1.55	0.078
1 1/4"	0.0950	10.50	0.420	0.210	0.105
1 1/2"	0.0790	12.70	0.508	0.254	0.127
2"	0.0570	16.90	0.676	0.338	0.169
2 1/2"	0.0373	26.80	1.07	0.536	0.268
3"	0.0285	35.10	1.40	0.702	0.351
4"	0.0200	50.00	2.00	1.00	0.500
5"	0.0148	67.60	2.70	1.37	0.676
6"	0.0114	87.70	3.51	1.76	0.877
8"	0.0076	132.00	5.26	2.63	1.32
10"	0.0053	189.0	7.55	3.77	1.89
12"	0.00436	229.0	9.16	4.58	2.29
14"	0.00396	253.0	10.1	5.06	2.53
15"	0.00369	271.0	10.8	5.42	2.71
16"	0.00344	291.0	11.6	5.82	2.91
18"	0.00306	327.0	13.1	6.54	3.27
20"	0.00275	364.0	14.6	7.28	3.64
24"	0.00173	578.0	23.2	11.6	5.78
26"	0.00159	631.0	25.2	12.6	6.31
30"	0.00138	725.0	29.1	14.5	7.25
36"	0.00114	877.0	35.0	17.5	8.77

Density of Steel = 489 lbs./ft.3
Resistivity of Steel = 13.44 x 10-6 ohm/cm3
or 0.441 x 10-6 ohm/ft3
Resistance of Pipe (ohms/l.F.)/lbs. ft.
Example 12" Standard 49.6 lb. ft. pipe
Resistance of Pipe = 216 x 10-6/49.6
= 4.36 x 10-6 ohm/L.F.

Current Flow/1 mv drop in 100 ft.=
0.001 volt/4.36 x 10-6 (100) = 2.29 amps

Figure 5-24

PIPE DATA

STANDARD PIPE						EXTRA STRONG		
Pipe Size	External Diameter	Lbs./ Ft.	Wall Thickness	Surface Area sq. ft./ ft.	Micro-Ohms/Ft.	Lbs./Ft.	Wall Thickness	Micro-Ohms/Ft.
3/4"	1.05	1.13	0.113"	0.275	191.00	1.47	0.154	147.00
1"	1.31	1.68	0.133	0.344	129.00	2.17	0.179	100.00
1 1/4"	1.66	2.27	0.140	0.434	95.00	3.00	0.191	72.00
1 1/2"	1.90	2.72	0.145	0.497	79.00	3.63	0.200	60.00
2"	2.37	3.65	0.154	0.622	59.00	5.02	0.218	43.00
2 1/2"	2.87	5.79	0.203	0.753	37.30	7.66	0.276	28.20
3"	3.50	7.57	0.216	0.916	28.50	10.25	0.300	21.10
4"	4.50	10.80	0.237	1.180	20.00	15.00	0.337	14.40
5"	5.56	14.60	0.258	1.450	14.80	20.80	0.375	10.40
6"	6.62	19.00	0.280	1.730	11.40	28.60	0.432	7.60
8"	8.62	28.60	0.322	2.260	7.60	43.40	0.500	4.98
10"	10.75	40.50	0.365	2.810	5.30	54.70	0.500	3.94
12"	12.75	49.60	0.375	3.340	4.36	65.40	0.500	3.30
14"	14.00	54.60	0.375	3.670	3.96	72.00	0.500	3.00
15"	15.00	58.60	0.375	3.920	3.69	77.40	0.500	2.79
16"	16.00	62.60	0.375	4.190	3.44	82.60	0.500	2.61
18"	18.00	70.59	0.375	4.710	3.06	93.40	0.500	2.32
20"	20.00	78.60	0.375	5.240	2.75			
24"	24.00	125.00	0.500	6.280	1.73			
26"	26.00	136.17	0.500	6.800	1.59			
30"	30.00	157.00	0.500	7.850	1.38			
36"	36.00	189.00	0.500	9.430	1.14			

Figure 5-25

Structure-to-soil potential measurements should be made with the interfering rectifier cycled on and off to locate the point of most positive potential shift. Measurements should be made every 50 feet on pipelines to find the area of interference. Measurements should then be made every foot in the area of interference to pinpoint the location where the current is leaving the foreign pipeline (point of most positive potential shift). That point should be marked as the location where the reference electrode should be placed when making further tests.

5-33. Lead wires

If there is not already a test station installed at the crossing between the structures, install one to allow further testing and bonding, if required. Two test lead wires should be connected to the foreign structure, and two wires should be connected to the protected structure. One lead from each structure can then be used to make the bond and the other as a test lead. The location of the test station should be near the point where the two pipelines cross or the point where the two structures are nearest to each other (see figure 5-26). NOTE: If the foreign structure does not belong to the government, permission for the bonding of the test leads should be scheduled with the owner so that the corrosion engineers from that organization can be present during the test. Each engineer should have a copy of the test data and should sign the data sheet as a witness.

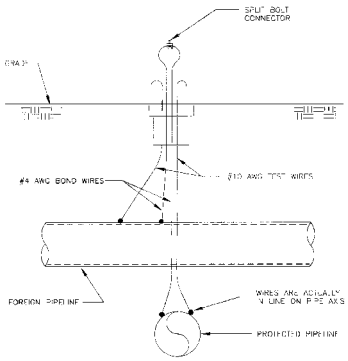

Figure 5-26

5-34. Structure-to-soil potential measurements

With the rectifier installed on the protected line (the one causing the interference) cycled on and off, measure and record the structure-to-soil potential using one of the test leads from the foreign structure and placing the reference electrode directly above the point of interference found in paragraph 5-32. A high impedance digital voltmeter should be used to get the best accuracy. If the foreign pipeline is protected by impressed current, turn the nearest rectifier(s) on the foreign line off, then measure and record the potentials as described above. These tests indicate how the interfering rectifier on the protected line affects the foreign line's native state potential (no cathodic protection), see table 5-2. Interference is corrected when the interfering rectifier does not cause the potential of the foreign line to go more positive than its native state potential, which is the potential measured after the foreign structure is depolarized.

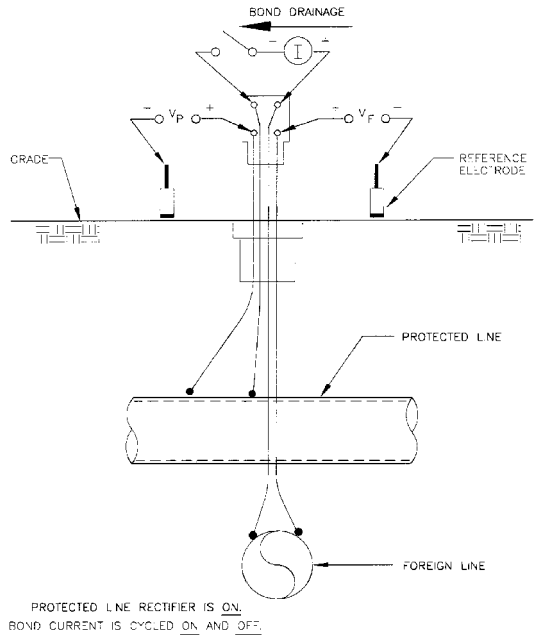

Figure 5-27

5-35. Sizing the resistance bond

The next step in sizing the resistance bond is to determine the effect on the potential of the foreign line at the point of greatest exposure, of draining a measured quantity of current to the protected line. This is shown in figure 5-27. Typical data taken during this phase of the test is shown in table 5-3.

a. Turn the rectifier on the protected structure on.

b. Cycle the bond current "on" and "off". Measure the rectifier current and the potential on each structure with the bond current (current flowing through the bond wire between structures) "on" and "off".

c. Calculate the "coupling" values as shown in tables 5-2 and 5-3.

d. Use the following equations to calculate the amount of bond current required to restore the potential of the foreign structure to its "native" or "natural" potential.

VF = VF(NAT) + RvF(INT) I(INT) - RvF(B) I(B)

where: VF = potential of the foreign line at point of greatest exposure, volts

VF(NAT) = natural potential of foreign line at point of greatest exposure, volts

RvF(INT) = interference "coupling" of foreign line due to protected line's rectifier, volts per ampere

I(INT) = current of protected line's rectifier, ampere

RvF(B) = "coupling" of foreign line due to bond current drainage, volts per ampere

I(B) = bond current drained, amperes

For the potential of the foreign line to be restored to its natural potential, VF = VF(NAT), the equation below becomes:

VF - VF(NAT) = 0 = RvF(INT) I(INT) - RvF(B) I(B) or,

RvF(INT) I(INT) = RvF(B) I(B)

This equation can be solved for the bond current required (I(B)).

$$I(B) = \frac{RvF(INT)\ I(INT)}{RvF(B)}$$

In the examples given in tables 5-2 and 5-3:

$$I(B) = \frac{(.003V/A)\ (10A)}{.15\ V/A} = .20\ A$$

e. Determine the value of resistance needed to allow the above value of bond current to flow. In theory, this resistance can be calculated by determining the resistance and voltage between the structures, and using the equation:

$$R(B) = \frac{[Rm(INT)\ I(INT) + V\ o.c.] - Rs}{I(B)}$$

where: R(B) = bond resistance required, ohms
Rm(INT) = "coupling" between structures due to rectifier on protected structure, volts per ampere
I(INT) = rectifier current, amperes
V o.c. = open-circuit voltage between structures with rectifier off, volts
I(B) = bond current (calculated), amperes
Rs = resistance between the structures, ohms

While using this equation is a theoretically accurate method of obtaining the bond resistance, in practice it has been found to be more efficient to install a variable resistor, and adjust it to obtain the required bond current. Then the resistance is measured, and a fixed resistor is installed.

Table 5-2
Interference Test Data
- Potentials at Point of Greatest Exposure
- Rectifier on Protected Line Cycled On & Off
- Current = 10 Amperes

Potential on Protected Line, mV (Vp)		Potential on Foreign Line, mV (VF)	
ON	OFF	ON	OFF
-920	-750	-760	-790*
Protected “Coupling” on Protected Line		Interference “Coupling” on Foreign Line	
Rvp = [(Vp ON) - Vp (OFF)]/I(INT) = [(-920)-(-750)]/10 = -170mV/A = -0.017V/A		RvF = [(Vp ON) - (Vp OFF)]/I (INT) = [(-760)-(-790)/10 = +30mV/A = +0.003V/A	

* Indicates interference

Table 5-3 **Bond Resistance Test Data** - Potentials at Point of Greatest Exposure - Rectifier on Protected Line On - Current = 10 Amperes - Bond Drainage Between Foreign Line and Protected Line - Current = 1.2 Amperes - Bond Current Cycled On & Off			
Potential on Protected Line, mV (Vp)		Potential on Foreign Line, mV (VF)	
ON	OFF	ON	OFF
-900	-920	-900	-770
“Coupling” Due to Bond Drainage		“Coupling” Due to Bond Drainage	
Rvp(B) = [(Vp ON)(B) - Vp (OFF)(B)]/I(B) = [(-900)-(-920)]/1.2 = +20mV/1.2A = 0.0167V/A		RvF(B) = [(Vp ON)(B) - (Vp OFF)(B)]/I (B) = [(-900)-(-770)/1.2 = -180mV/A = -1.5V/A	

5-36. Alternate method of controlling cathodic interference

Under some conditions, bonds to solve interference problems do not work satisfactorily or are too costly to install. An alternate method to control cathodic interference is to install a galvanic anode or anodes at the point of interference (Figure 5-28). The galvanic anode will serve as a better ground where the collected current can leave the foreign structure and return to the protected structure. The galvanic anodes should be connected to the foreign structure and installed on the side of the foreign structure nearest to the protected structure. The galvanic anodes should be located 15 to 25 feet away from the foreign structure if conditions permit. Probably more than one galvanic anode will be required to provide a design life of 20 years. A combination of soil resistivity and current drain should be used to determine the number and size of galvanic anodes needed.

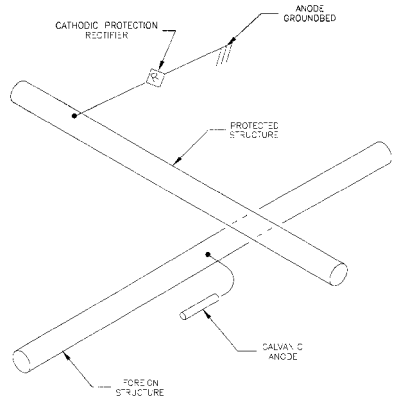

Figure 5-28

5-37. Corrosion coordinating committees

To better accomplish interference and stray current testing, corrosion personnel in various areas of the country have formed organizations known as regional corrosion coordinating committees. The committees are generally composed of utility companies, industrial, and government representatives. These committees serve the purpose of coordinating all the testing activities, providing rectifier installation information to members, and maintaining records of installations. In keeping with this corrosion control practice, installation corrosion personnel are encouraged to participate in such organizations if they exist in their area.

CHAPTER 6

PROTECTIVE COATINGS

Section I. General information

6-1. Importance of good coating systems

Installation of a good protective coating is essential to economically achieve cathodic protection on utility systems. Desirable characteristics of coatings are: effective electrical insulator, effective moisture barrier, good adhesion to pipe surface, ability to resist damage during handling, storage and installation, ability to maintain substantially constant electrical resistivity with time, resistant to disbonding when under cathodic protection and ease of repair.

a. Typical factors to consider when selecting a pipe coating are: type of environment, accessibility of pipeline, operating temperature of pipeline, geographical and physical location, handling and storage and costs.

b. Application: Qualified personnel should keep every phase of the coating operation under surveillance.

(1) Surface preparation, primer application, coating thickness, temperatures, bonding, and other specific requirements should be checked periodically, using suitable test procedures for conformance with specifications.

(2) The use of holiday detectors is recommended to detect faults that would not be observed visually. The holiday detector should be operated in accordance with manufacturer's instructions and at a voltage level appropriate to the electrical characteristics of the coating system.

c. Installation: Joints, fittings, and tie-ins should be coated with a material compatible with the existing coating.

(1) Coating defects should be repaired.

(2) Materials used to repair coatings must be compatible with existing pipe coating.

(3) The ditch bottom should be graded and free of rock or other foreign matter that can damage the coating. Under difficult conditions, consideration should be given to padding the pipe or the ditch bottom.

(4) Pipe should be lowered carefully into the ditch, avoiding coating damage.

(5) Care should be taken when backfilling so that rocks and debris will not strike and damage the pipe coating.

d. Whereas coatings constitute a corrosion control measure, they are not by themselves the answer to corrosion control. Coatings plus cathodic protection provide the most effective means of limiting corrosion. In principle, coatings prevent corrosion by physically separating a metal structure from the electrolyte or corrosive environment. In that respect, coatings directly influence the need for and the effectiveness of cathodic protection systems. Ideally, if a structure could be completely covered with an electrically insulating coating, and remain that way, there would be no current flow and no need for cathodic protection. However, in practice, that does not occur and coatings must be complemented with cathodic protection wherever possible. While it is obvious that a good continuous unbroken coating will reduce corrosion, it is not so apparent that corrosion may be accelerated at the bare or damaged spots (holidays). While the rate of

corrosion depends upon the current density at the surface of the metal, a small electric current leaving the very small area of bare metal at a holiday will create a high current density. This will cause deep pitting and premature structural failure.

6-2. Types of coatings

The number, composition, and types of coatings are great and beyond the scope of this publication; however, broad classification is made according to two general kinds of structures:

a. Buried structures such as pipelines, fuel oil storage tanks, etc., are usually covered with built-up coatings or more recently, "thin-film" polymeric coatings. Common examples of these coatings are hot coal tar reinforced with pipe wrapping impregnated with bituminous binder; and recently, fushion-bonded epoxy and extruded polyethylene coatings. These coatings are resistant to moisture, electrical, and physical damage.

b. Immersed structures such as elevated water storage tank interiors, condenser pans, condensate receiver tanks, etc. are usually painted with coatings having bituminous rubber, epoxy or vinyl bases. These types of coatings are also resistant to moisture, electrical, and physical damage. It is important in these environmentally sensitive times, to use only Volatile Organic Compound (V.O.C.) compliant coatings.

6-3. Coating damage

In addition to the coating holidays described above, damage may occur in other ways, that is, by careless or improper use of corrosion control and cathodic protection techniques.

a. Mechanical Damage. Probe bars for corrosion testing must not be driven into the soil to make contact with coated pipe. Damage that results from excavation of adjacent facilities must be repaired. Installation of test leads, bonding conductors, or anode leads will require coating removal. After leads have been attached, coating must be repaired.

b. Electrical Damage. Electrical damage to a coating may be caused by excessive voltage from a holiday detector or by excessive structure-to-earth potential applied by an impressed current system. The following empirical formula defines the voltage to be applied by the holiday detector:

$$V = KT^{1/2}$$

where: V = peak voltage output (kilovolts)
T = thickness of coating in mils (do not include wrappers)
K = a constant depending on type of coating (1.0 for somastic, 1.25 for coal tar, 1.5 for epoxy or plastic).

The voltage will pinpoint the holidays, but will not further damage the coating. Measuring the holiday detector voltage in the field requires a special high-voltage pulse voltmeter. The above formula will determine the output voltage capacity of the holiday detector needed. To adjust the detector to the proper voltage in the field, the procedure outlined in the manufacturer's instructions should be used.

c. Cathodic Protection Damage. It is possible, under some conditions, to apply excessive amounts of cathodic protection to a coated pipeline and damage the coating. There is a limiting polarization potential, called the "hydrogen over-voltage potential", beyond which free hydrogen will be developed. Gas bubbles will form on and break away from pipe metal exposed at coating defects. A developing hydrogen gas bubble can exert tremendous pressure. When this pressure is created at a coating void, there is a stripping action which can increase the area of exposed metal and result in rapid deterioration of what may have initially been an excellent coating. Polarization potential can be measured at a given location on a coated pipeline by measuring the pipeline-to-earth potential immediately (within the first second or two) after simultaneously interrupting the current output from all cathodic protection current sources affecting that portion of the

pipeline. If, on steel pipelines, this potential is below approximately 1.2 volt (measured between pipe and soil as contacted by a copper-copper sulfate reference electrode), danger of coating damage is slight. If the current-off polarization potential is at or slightly above this figure, free hydrogen may be produced and possible coating damage could be expected. It is possible to cause extensive damage through improper rectifier operation. This results from maintaining excessive structure-to-electrolyte potential. For this reason, it is imperative that the cathodic protection criteria be followed. The following empirical formula specifies the maximum ferrous structure-to-earth potential at all points on a structure which will not cause coating damage:

$E = (125P^{0.3} + 600)$
Where: E = potential in millivolts
P = resistivity in ohm-cm

This will limit the ferrous structure-to-earth potential in the vicinity of the rectifier connection. The table below lists the safe maximum potential limits for specific resistivities as calculated, using the above formula:

P (ohm-cm)	E (volts negative)
2,000	-1.8
3,000	-2.0
5,000	-2.2
10,000	-2.6
15,000	-2.7
20,000	-3.0
30,000	-3.3
40,000	-3.6

Potentials listed are too high for coated aluminum and lead structures and will result in chemical deterioration of the metal. Water storage tank "instant-off" potentials should be limited to -1.2V maximum to prevent coating damage.

d. Miscellaneous Coating Damage. Damage or defects in coatings may also be caused by:

(1) Damage to coating by subsequent construction (probe bars for pole installation, etc.)

(2) Cracks from excessive thermal or mechanical stresses.

(3) Action of chemicals in the earth surrounding a pipeline.

(4) Action of bacteria in the soil surrounding a pipeline.

(5) Flaws in the coating materials as applied.

(6) Failure to properly field-coat joints when extensions or modifications are made to a coated pipeline.

e. Coating Aging. As coatings age, they become less effective as electrical insulators. As the coating loses its insulating properties, it allows current to flow out of the surface of the structure and corrosion to take place under the coating film. For this reason, the amount of current needed to give adequate cathodic protection becomes greater. It is also possible for disbonded areas of coating to actually shield cathodic protection current from reaching the surface of the pipe, resulting in undetected corrosion. It is important that any breaks in a coating be carefully repaired before the structure is placed in service. During the life of the structure, any breaks found in protective coatings must be repaired.

Section II. Coating Protection

6-4. Handling, storage, and construction of coated facilities

The effectiveness of any coating may be impaired through physical damage. Proper storage and handling must be accomplished as follows:

a. Handling. Coated materials will be handled with equipment designed for that purpose at all times. Equipment such as wide canvas or nylon slings, end hooks, padded clamps, and wide padded skids should be used to prevent coating damage (Figure 6-1). Bare cables, chains, metal bars, narrow skids, or unpadded forks should not be permitted to come into contact with any coating.

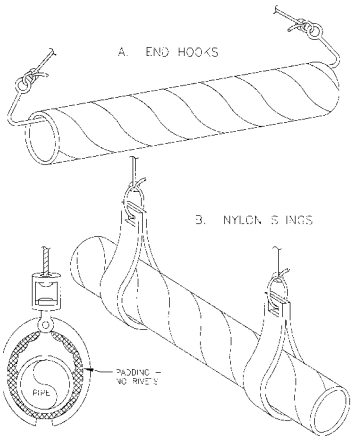

Figure 6-1

b. Storage. Any location where coated structures are stored should be free of rocks, sticks, and other sharp objects that could damage coatings (Figure 6-2). Storage locations should be in an atmospheric environment that would not create coating deterioration or damage. Where possible, coated materials such as pipe should be stored under cover and away from direct sunlight. Proper stacking of stored coated items such as pipe is essential to prevent coating damage.

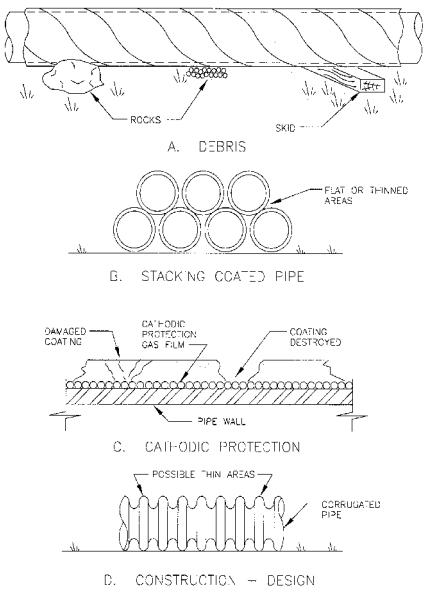

Figure 6-2

c. Construction. During construction, coated pipe requires special handling. Pipe should not be dragged or shifted into position for welding or fitting purposes. Belt slings or padded clamps must be used to move pipe. Prying, wedging, or hammering of coating is not recommended. Ditch bottoms and sides should be clean and free of sharp objects. Under no circumstances should skids or other supporting materials be placed in the ditch to remain after construction. Backfill material should be clean, uniform, and nondetrimental to coatings or structures.

6-5. Inspection

No matter how good a job you do in selecting a coating system, it will not function as intended unless it is properly applied. The application of a coating should be carefully inspected by qualified people to insure that all requirements for coating application have been met. It is not wise to set up a list of specifications and requirements for a coating job and then fail to inspect the job to be sure that specifications are met. In this chapter, inspection is interpreted to concern not only the coating itself, but also the type and condition of the equipment, surface preparation, conditions of application and inspection of the finished job. For those who do not already have a detailed set of requirements for seeking of bids for, preparing contracts concerning and other aspects of getting a coating job, a detailed guide is available from NACE. In the long run, it is far better for all concerned to start with a clear understanding of exactly what is to be done than it is to have a series of disagreements during the course of a job. Even when a job is being done by in-house personnel, it is helpful for all concerned to know what, how and by whom the job is to be done and what performance

level is expected. Furthermore, an inspector should not only be someone who can exercise good judgement, but also should have authority to enforce his or her decisions. It is important to see that all mechanical repairs necessary are done before the surface preparation starts; that is, all welding, tightening or other work should be completed. There is a proper way to do mechanical work, especially welding, which is to be followed by coatings.

a. Coal Tar Enamel. When the coating and wrapping operations have been completed, the surface should be tested with an electrical holiday detector. The detector should emit an adjustable voltage, pulsating signal and shall be operated between 8,000 and 15,000 volts. Coil spring electrodes should be used over the large expanses of pipe surface and suitable brush electrodes for the appurtenances. The holiday detector should be adjusted twice a day (due to dependence upon temperature and relative humidity). The operating voltage should be determined according to the following procedure:

(1) Choose a portion of pipe approximately fifteen inches from a joint (this position represents the maximum coating thickness).

(2) Deliberately puncture the coating and wrapping with an awl or similar tool.

(3) Move the detector across the holiday and adjust the sensitivity such that a positive signal is not received.

(4) Place a strip of the designated wrapping material over the holiday.

(5) Continue moving the detector back and forth across the holiday and slowly increase the voltage until the fault is detected.

After proper adjustment, the holiday detector should be moved along the pipe surface at a rate of 35 to 50 feet per minute. All holidays thereby detected should be appropriately repaired.

b. Polyethylene Plastic Tape. When the coating and wrapping operations have been completed, the surface should be tested with an electrical holiday detector. The detector should emit an adjustable voltage, pulsating signal and shall be operated at approximately 7,500 volts (see Figure 6-3). Coil spring electrodes should be used over the large expanses of pipe surface and suitable brush electrodes for the appurtenances. The holiday detector should be adjusted twice a day (due to dependence upon temperature and relative humidity). The operating voltage should be determined according to the following procedure:

(1) Place four layers of tape on a section of pipe to be coated.

(2) Deliberately puncture the tape with an awl or similar tool.

(3) Move the detector across the holiday and adjust the sensitivity such that a positive signal is not received.

(4) Apply the outerwrap to the taped section.

(5) Continue moving the detector back and forth across the holiday and slowly increase the voltage until the fault is detected.

After proper adjustment, the holiday detector

Figure 6-3

should be moved along the pipe surface at a rate of 35 to 50 feet per minute. All holidays thereby detected should be appropriately marked and immediately repaired.

c. Thin-Film Coatings. For thin coatings such as epoxies, vinyls, etc., that do not exceed 30 mils, use a holiday detector, which consists of a sponge, power pack and bell (Figure 6-4). The unit is grounded to the vessel being checked. The bell rings when the moistened sponge makes contact with the metal through a pin-hole. Where specifications call for a pin-hole free coating, the entire surface should be checked with this instrument.

Figure 6-4

6-6. Materials and methods of applciation

a. Coal Tar Enamel. Recommended procedure is to coat all steel pipe in the mill enroute from the manufacturer. At the job site, it will be necessary to inspect the pipe as it is received, repair any damaged areas and coat welded field joints, fittings, etc. All of the specifications and procedures discussed are subject to inspection.

b. Polyethylene Plastic Tape. Clean, prime and wrap the pipeline with a single application of polyethylene plastic tape. The tape should be spirally overwrapped with a single layer of outerwrap applied by the same machine.

(1) Cleaning and Priming. After the pipe has been welded into a continuous string, thoroughly clean it of all rust, grease, dirt, scale, weld burns, and other foreign matter. This is accomplished by means of a regular line-traveling type of combination cleaning, priming and wrapping machine which employs counter rotating heads with wheels and/or knives and wire brushes. The primer should be thoroughly mixed in its original container before it is put into the closed primer storage tank on the machine. Under no circumstances shall the primer be applied from the open spill pan. The priming operation should cover the entire surface of the cleaned pipe with a thin, even coat of priming material. The primer must not be applied when the pipe is wet or when conditions are such that dust can settle on the wet primer. Direct all dust and particles from the cleaning operation away from the wet primer. Primer containers must be tightly sealed when not in use, and disposed of when empty. Maintain the temperature of the primer at the time of application between a minimum of 50 degrees F, and a maximum of 85 degrees F. A heater may be required to maintain this temperature.

(2) Wrapping. Immediately follow the priming operation by the wrapping operation. Tape and outerwrap should be simultaneously spirally wrapped, using a power-driven, line-traveling application machine, with the brake adjusted to provide the manufacturer's recommended tension. The end lap of each new roll should overlap the end of the preceding roll by a minimum of one-third (1/3) the machine applied tape width. Hand apply this end area without tension, and press it into position by several wiping strokes of the hand. Its spiral angle must be parallel to the previously applied spiral, and it must be smoothly applied without twist or distortion. Tape and outerwrap must be smoothly applied and be free of wrinkles or voids. Minimum lap should be 1/2", although an occasional 1/4" lap during machine adjustment will not necessitate patching. The maximum lap on bends or during machine adjustment should not exceed 3/32"; optimum lap on straight runs is 3/4". Hold outer-wrap in place at the beginning and end of each day roll by a circumferential wrap of 1" tie-down tape. All coating and wrapping materials are subject to inspection. For sections requiring double wrapping, the wrapping machine should be adjusted to give a minimum lap of half the tape width + 1/2", a maximum lap of half the tape width + 3/32"and an optimum lap on straight runs of half the tape width + 1". Otherwise, the method employed is essentially the same as for single wrapping.

c. Thin-Film Coatings. Recommended procedure is to coat all steel pipe in a mill enroute from the manufacturer. At the job site, it will be necessary to inspect the pipe as it is received, repair damaged areas and coat welded field joints, fittings, etc. All specifications and procedures discussed are subject to inspection.

d. Extruded Plastic. Recommended procedure is to coat all steel pipe in a mill enroute from the manufacturer. At the job site, it will be necessary to inspect the pipe as it is received, repair any damaged areas and coat welded field joints, fittings, etc. All of the specifications and procedures discussed are subject to inspection.

6-7. Backfilling

a. Coal Tar. Coated pipe must be backfilled with a minimum four inch layer of well tamped sand, below and completely around the pipe. The remainder of the trench shall be filled in one foot layers of approved fill material completely free from debris. Each layer should be well tamped prior to proceeding. The excavated material may be used for backfill if it conforms to the requirements and is approved by the inspector. Backfill under paved areas should be gravel or sand with a maximum aggregate size of two inches. Open trenches across areas to be paved should be backfilled as designated, with the exception that the entire trench must be filled in three inch layers; each layer well compacted. Where rocks or gravel is encountered at the bottom of the trench, the inspector must make sure that the four inch layer of sand around the pipe is properly installed such that no rocks will contact the pipe. Where approved, a 3/16 inch rockshield may be substituted for the sand pad. Any trenches improperly backfilled should be re-opened and filled in accordance with the specifications. Where settlement has occurred, the trench should also be re-opened and properly compacted.

b. Polyethylene Plastic Tape. Coated pipe should be backfilled with a minimum four inch layer of well tamped sand, below and completely around the pipe. The remainder of the trench should be filled in one foot layers of approved fill material completely free from debris. Each layer should be well tamped prior to proceeding. The excavated material may be used for backfill if conforming to the requirements and approved by the inspector. Backfill under paved areas will be gravel or sand with a maximum aggregate size of two inches. Open trenches across areas to be paved should be backfilled as designated with the exception that the entire trench should be filled in three inch layers; each layer well compacted. Where rock or gravel is encountered at the bottom of the trench, the inspector must make sure that the four inch layer of sand around the pipe be properly installed such that no rocks will contact the pipe. Where approved, a 3/16" rockshield may be substituted for the sand pad. Any trenches improperly backfilled should be re-opened and filled in accordance with the specifications. Where settlement has occurred, the trench should also be re-opened and properly compacted.

c. Thin Film and Extruded Plastic. Backfilling procedures should be the same as described in Paragraph 6-7a, above.

Section III. Coating Maintenance

6-8. Visual inspection

It is more difficult to visually inspect coatings on buried structures than on above-grade structures such as water tanks, clarifiers, other process equipment, and marine structures such as piers, docks and bulkheads. The inspection of coating on below-grade structures is usually made through electrical tests, described in paragraph 6-9. The condition of coatings in above-grade structures should be inspected regularly, and appropriate repairs made. Coating damage to structures such as water storage tanks should be minimized by the proper operation of the cathodic protection system, and coating repair should not be necessary until 50% deterioration is experienced. However, all damaged coating above the water line should be repaired

immediately as the cathodic protection system has no effect there, and continued extensive coating deterioration and metal loss is possible.

6-9. Electrical tests

Periodic tests of coating conductance should be conducted, per the procedures described in Paragraph 4-25. These tests should be conducted in the same manner as the ones conducted when the structure was first installed. The value of conductance obtained should be compared with the original values. Any significant increase in coating conductance indicates a definite change in the coating characteristics, and the problem should be investigated. A shorted insulator or underground contact could also influence the structure resistance so these conditions should first be ruled out before assuming that the coating is at fault.

6-10. Coating repair procedures

During the inspection of any coated structure, damaged or missing coating will be repaired immediately with coatings equal to or better than the original coating. In all cases, coatings should be compatible for use on buried or submerged structures and should follow coating specifications and standards covered in NACE RP0169, Control of External Corrosion on Underground or Submerged Metallic Piping Systems. Large scale repairs or coatings should be brought to the attention of the operations superintendent for programming action.

a. Patching Coal Tar Coatings. After field welds have been made, the exposed surfaces on either side of the joint should be cleaned of all foreign matter including dirt, charred primer, rust and weld spatter. The surface should then be primed with synthetic coal-tar primer and coated with plasticized enamel. The primer and enamel used for patching will be the same as specified for the pipe (minimum enamel thickness, 3/32 inch). A bonded single wrap of fifteen pound, coal tar saturated, asbestos or glass fiber felt should then be applied, overlapping the existing felt a minimum of one inch. All valves, tees and other uncoated appurtenances should be coated in a similar manner. Where holidays or damaged coating have been detected, the unbonded coating should be removed and the piping should be cleaned to the steel surface. The primer, enamel and wrapper should then be applied in the manner outlined above.

b. Patching Polyethylene Plastic Tape Coatings. The pipe must be cleaned, primed, coated and wrapped by hand at locations of tie-in welds, fabricated assemblies and similar appurtenances which cannot be reached by the traveling machine. Also, short sections of the pipeline which are impractical to machine coat and wrap may be hand coated and wrapped, but only with prior approval of the inspector. Coating of the tie-in welds below -30 degrees F will be permitted providing the entire area to be coated is heated to a minimum temperature of 60 degrees F, and a maximum temperature of 400 degrees F. The parts of the pipeline which are to be hand coated and wrapped must be adequately cleaned by wire brushes, power brushes or scrapers, etc., and wiped with clean rags to remove all grease, dirt, loose rust or scale, etc., prior to wrapping. Hand wrapping is accomplished by priming and careful spiral wrapping (Figure 6-5) with 2", 4" or 6" wide conformable plastic tape, depending on pipe diameter. Regular shaped fittings such as elbows and tees should be hand wrapped with 1" or 2" wide conformable plastic tape, depending on pipe diameter, and such wrapping is to be continuous and free of voids. Valves and other irregular fittings which are to be buried with the line should be cleaned

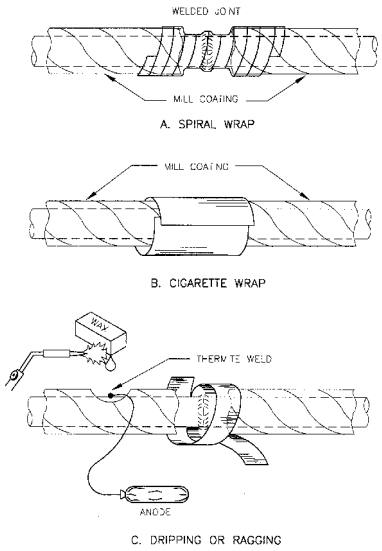

Figure 6-5

and coated with cold-applied coating materials. These materials are to be hand applied and thoroughly worked into the corners and fillets of the valves and fittings. This coating must be thoroughly dry before backfilling. All holidays and damaged or defective coating must be repaired by "orange peeling" the outerwrap back from the damaged area, and applying primer and a plastic tape patch of the same material as that used for coating the pipe. The patch should extend a minimum of 4 inch past the damaged area. Then replace the outerwrap and tie it down with the tie-down tape. If a large area has been damaged, remove the outerwrap and apply a spirally wrapped patch. The patch must then be wrapped with the outerwrap and tied down with tie-down tape.

c. Patching Thin-Film and Extruded Mastic Coatings. Contact the coating manufacturer for recommendations on repair to their specific coating.

d. Miscellaneous Equipment - Interior Coatings. Repair of paint-type coatings such as epoxies, urethanes, vinyls, etc. is accomplished in the manner directed by each manufacturer; however, any repair of coating requires surface preparation such as wire brushing or sand blasting before coating.

e. Inspection. Coating must be electrically inspected with a holiday detector set to proper voltage when the extent of repair involves coated pipe greater than 100 feet in length. See Paragraph 6-5 for proper voltage settings.

CHAPTER 7

INITIATION AND MAINTENANCE OF RECORDS

Section I. General information

7-1. Importance of record keeping

The success and effectiveness of a cathodic protection program depends on periodic servicing of installed systems. Corrosion control by cathodic protection is very effective when maintained adequately. The operation of cathodic protection systems requires that certain records be kept. These records, when taken together, provide a history of the cathodic protection system telling what, when, where it was installed, what care has been given the system, and whether the system is doing its job.

7-2. Terms

a. Annual Cathodic Protection Performance Survey. Bases that have cathodic protection installed must check all protected facilities each year to determine if each system is receiving adequate protection. Facilities that have dielectric insulation installed to separate dissimilar metals must also be checked to determine adequacy of electrical isolation.

b. Initial Installation-Wide Survey. The initial cathodic protection survey is to determine the requirements for installing cathodic protection. This survey will usually be performed by an architect-engineer (AE) contractor specializing in cathodic protection. Some bases will need protection on 100 percent of their systems, while others might not need any cathodic protection.

c. "Cathodic Protection Diagnostics". A computer program, which is available from the U.S. Army Corps of Engineers. It can be used as follows:

(1) To record and maintain background information on utility systems, underground piping, underground storage tanks, water tanks, etc.

(2) To record and maintain background information on cathodic protection systems.

(3) To record and maintain monthly/annual cathodic protection testing data.

(4) To record and maintain data on failures/leaks, repairs, repair costs, etc.

(5) To perform a limited amount of troubleshooting and diagnostics for cathodic protection systems.

(6) To program testing and maintenance of cathodic protection systems.

(7) To manage cathodic protection requirements for compliance of underground storage tanks with environmental regulations and gas system safety standards.

Section II. Record-keeping requirements

7-3. System installation records

a. Establish a program for maintaining the following data relative to the operation of all cathodic protection systems:

(1) Annual performance survey

(2) Monthly rectifier checks

(3) Bi-annual sacrificial anode checks

(4) Maintenance of rectifiers

(5) Maintenance of groundbeds

(6) Maintenance of sacrificial anodes

(7) Maintenance of dielectric fittings

(8) Maintenance of cathodic protection for water heaters

(9) Inspection of cathodic protection system breaks

b. "Cathodic Protection Diagnostics" computer software should be used for this purpose.

7-4. Comprehensive master plan

A comprehensive master plan drawing should be prepared for the installation. This plan must show all installed rectifiers, groundbeds, magnesium anodes, insulating joints, reference electrodes, test stations and interference bonds. Add all changes in system layout as they occur. The corrosion engineer is responsible for updating the master plan as needed.

7-5. Cathodic protection records

The corrosion engineer must keep a cathodic protection record for all protected structures. In addition, record keeping is a regulatory requirement for underground storage tanks. The record must be in a tabulated form and must include the installed and proposed installation of cathodic protection systems. List an accurate description of all facilities protected under each project. If only a portion of a particular system is protected, list the percentage that applies. The "utility system protected" description must be in detail including rectifier size and number of anodes.

7-6. Technical records

The corrosion engineer must keep a file of technical records on each installed cathodic protection system. These technical records must include, but not be limited to, items such as:

a. Manufacturer's Data on Installed Equipment.

b. Operating instructions.

c. Lists of repair parts.

d. Names and addresses of sources of parts and service.

e. Current price lists.

f. Repair and maintenance instructions.

g. Construction specifications.

h. Shop drawings.

i. As-built drawings showing the location and extent of each cathodic protection system, any modifications made during the life of the system, and the exact location of each rectifier, anode bed, and test station.

j. All underground utilities must be shown on the comprehensive master plan which should be maintained in the office responsible for corrosion control, to show systems receiving cathodic protection. Mount the map or maps over a fibrous board or boards. Place a colored head pin at each point where a leak or failure is attributed to corrosion. Leave the pins in place for at least 5 years and use a different colored pin for each calendar year.

(1) If several leaks occur on the same system during a year in the same location, use the same color pins, however, note on the map the dates that the leaks occurred.

(2) At the end of 5 years, it will be necessary to review and update these maps. Always keep a file of old maps.

(3) Transfer the old map data to the new map so that a continuous history can be maintained. Delete the markings that are over 5 years old if the map is crowded.

k. In addition to the master plan pinpointing leaks, the cathodic protection technician or the corrosion engineer must inspect all leaks in underground utilities. At all leak sites, it is imperative that the cause of the failure be found and remedial actions taken to prevent reoccurrence.

l. Before utility leaks are repaired, the corrosion engineer or the cathodic protection technician should be notified of the leak and the approximate time the excavation will be complete and ready for inspection.

7-7. Cathodic protection forms

a. Structure-to-electrolyte potential measurements and dielectric testing. Measure structure-to-electrolyte potentials by interrupting the current source and recording on and off potentials to a $Cu/CuS0_4$ cell in the immediate area of the indicated regulator on riser piping. If any potentials of less than 0.85 volts are recorded, at the instant the source is turned off, further investigation would be required. A sample form for recording data is shown at figure 7-1, at the end of this chapter.

b. Test Station Data, Sacrificial Anode System (Figure 7-2). This form should be kept on an annual basis. Submit this form to the corrosion engineer for evaluation. Approximately 10 percent of all sacrificial anodes in a system must have test stations. Monitor each of the test stations using a separate log.

c. Rectifier Data (Figure 7-3). This form must be updated on a monthly basis. Every calendar month, verify that information is recorded in all blocks and submit the data to the corrosion engineer for evaluation. Record rectifier data by reading the rectifier meters, then inserting an ammeter in the anode leg of the circuit and recording on and off potentials between structure and anode. Calculate the circuit resistance ▲E/I. Also calculate power and efficiency ratings as shown in paragraph 5-20.

d. Tank-to-Water Potential Measurements (Figure 7-4). Record rectifier data as indicated in (a) above. Measure the potentials on the structure to a submersible $Cu/CuS0_4$. If these potentials vary more than $\pm$20%, further investigation is required.

e. Soil resistivity measurements (Figure 7-5). This form is to be utilized when determining the corrosivity of the soil in the area of an existing or proposed piping system, underground storage tank or other buried structure. It can also be utilized to record soil resistivity data in preparation for design of cathodic protection systems for proposed or existing structures. The measurements should be performed as described in chapter 4, paragraph 4-21.

f. Leak/Failure Data Records.

(1) The corrosion engineer must inspect all leaks or failures. The corrosion engineer is primarily responsible for performing inspections and records maintenance. When a leak is found to be caused by corrosion, make an entry on the base layout map according to paragraph 7-6j.

(2) Before an excavation is backfilled, the corrosion engineer must decide whether to install sacrificial anode(s). If the piping system is protected by an impressed current type cathodic protection system, the corrosion engineer must decide whether the rectifier current output is adequate or what adjustments are needed.

(3) During the repair of corrosion leaks, it is desirable to make color photographs of the failed structure.

STRUCTURE TO ELECTROLYTE POTENTIAL MEASUREMENTS and DIELECTRIC TESTING

Family Housing Gas Distribution | DATE: 13 Feb 91

DATE 1989	LOCATION	POTENTIAL READINGS[1] (-VOLTS) NO. 1	NO. 2	NO. 3	NO. 4	NO. 5	DIELECTRIC CONDITION[2] G	S	N
03/15	Bldg 4329 (regulator)	1.02	0.91				X		
	Bldg 320, Unit 4 (riser)	0.99	0.86				X		
	Bldg 320, Unit 3 (riser)	1.00	0.89				X		
	Bldg 320, Unit 2 (riser)	0.83	0.75					X	
	Bldg 320, Unit 1 (riser)	1.07	0.98				X		
	Valve 2 (100' S of Bldg 720)	1.20	1.00						X
09/20	Bldg 4329 (regulator station)	1.10	0.95				X		
	Bldg 320, Unit 4 (riser)	1.00	0.88				X		
	Bldg 320, Unit 4 (riser)	1.05	0.92				X		
	Bldg 320, Unit 2 (riser)	1.18	1.09				X		
	Bldg 320, Unit 1 (riser)	1.15	1.02				X		
	Valve 2 (100'S of Bldg 720)	1.19	1.05						X

REMARKS: 1. Measured wrt a Cu/CuSO4 half cell.
2. G=Good, S=Shorted, N=No Dielectric

No. 1 = current on
No. 2 = instant off

Notes: See attached sheet.

FORM A

Figure 7-1

TEST STATION DATA										
Boiler Plant #1 Fuel Tanks		SACRIFICIAL ANODE SYSTEM						DATE: 01 Aug 90		
DATE	LOCATION	# WIRES	CURRENT (mA)	CURRENT PER ANODE (mA)	POTENTIAL PIPE-TO-SOIL*					
					1	2	3	4	5	6
1989										
01/15	Test stn #1, Tank 1	3	320	64	1.05	1.02	1.04			
	Test Stn #2, Tank 2	3	500	100	1.00	1.01	0.99			
	Test Stn #3, Tank 3	3	420	84	0.95	0.99	1.00			
	Test Stn #4, Tank 4	3	380	76	0.99	0.99	1.01			
	Piping to plant	—	—	—				1.01		
07/14	Test stn #1	3	350	70	1.08	1.10	1.09			
	Test Stn #2	3	400	80	0.99	0.98	0.98			
	Test Stn #3	3	400	80	0.99	0.99	1.00			
	Test Stn #4	3	350	70	0.95	0.98	0.97			
	Piping to plant	—	—	—				0.98		

REMARKS:
* Negative potential in (V) measured wrt a Cu/CuSO4 half cell placed over the pipe at the nearest point to the test station.
1 = close end of tank
2 = center of tank
3 = far end of tank
4 = over piping before entering boiler plant

FORM B

Figure 7-2

Rectifier No. 9 (Water Tank 15) RECTIFIER DATA DATE: 14 May 90

DATE (1989)	RATING VDC	RATING ADC	LOCATION	TAP SETTINGS COARSE	TAP SETTINGS FINE	RECTIFIER METER READS VOLTS	RECTIFIER METER READS AMPS	INDEP. METER READINGS DC OUTPUT VOLTS	DC OUTPUT AMPS	AC INPUT VOLTS	AC INPUT AMPS	CIRCUIT RESIST. Ω	POWER (W) DC	POWER (W) AC	RECT. % EFF.
09/12	25	10	Leg of Tank 15	C	2	18	2.0	17.8	2.15	20	3.10	8.3	38.3	62.0	62%
10/17				C	2	17.5	1.9	17.6	2.00	20.5	3.16	8.8	35.2	64.8	54
11/15				C	2	15.0	1.5	15.1	1.63	19.7	3.00	9.3	24.6	59.1	42
12/10				C	2	19.5	2.3	20.0	2.50	19.9	3.01	8.0	50.0	60.0	83
(1990)															
01/15	25	10	Leg of Tank 15	C	4	20	2.8	20.6	2.91	20.7	2.96	7.1	59.9	61.3	98
02/14				C	4	22	3.1	22.3	3.22	22.9	3.24	6.9	71.8	74.2	97
03/15				C	4	19	2.4	19.8	2.46	21.0	2.68	8.0	48.7	56.3	86
04/15				C	4	15	0.07	14.8	0.08	20.9	2.90	185	1.18	60.6	1.9
05/10				C	3	20	3.0	21.0	3.00	23.0	3.40	7.0	63.0	78.2	81

REMARKS 12/10 Had to increase tap setting to achieve proper riser potential.
04/15 Suspected severed anode lead. Corrective action taken 04/20/91.
Rectifier stacks replaced on 12/31/90.

FORM C

Figure 7-3

TANK-TO-WATER POTENTIAL MEASUREMENTS

TANK NUMBER: 15 | DATE: 05 Mar 91

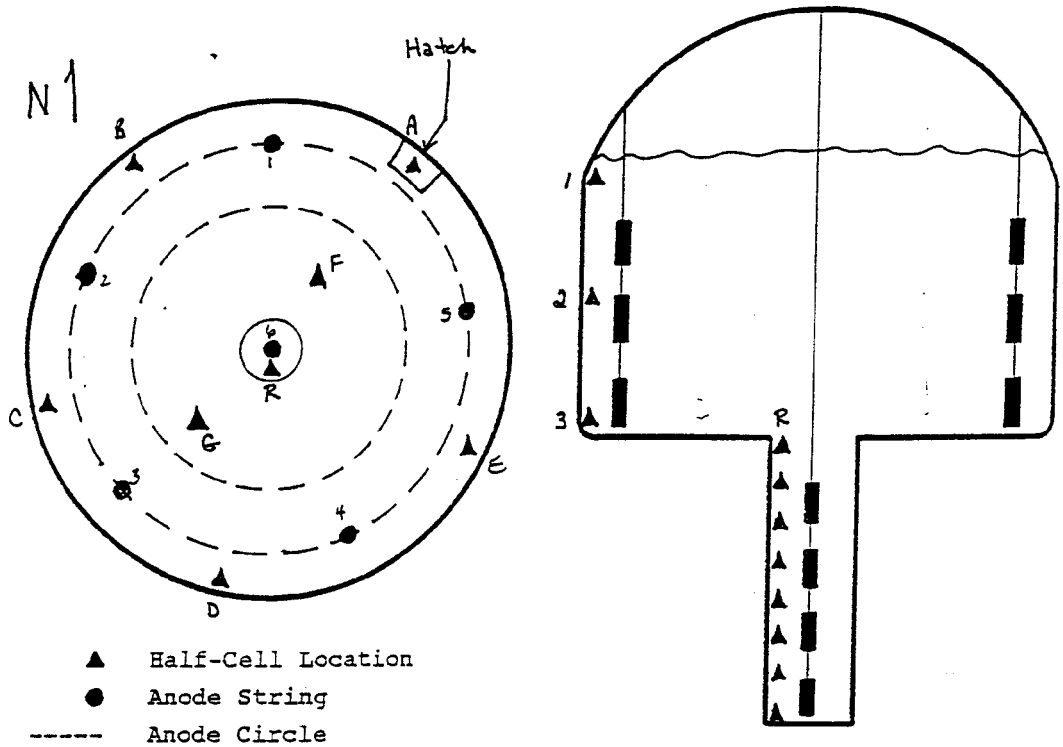

NO.	LOCATION	POTENTIAL READINGS (-V)*		
		NO. 1	NO. 2	NO. 3
A		1.20	1.15	1.18
B		1.15	1.10	1.05
C		1.10	0.99	1.09
D		0.88	0.80	0.77
E		1.05	0.99	0.98
F				1.18
G				0.82
R	Top, 10' down, 20'	1.20	1.19	1.15
	30', 40', 50'	1.19	1.12	1.10
	60', 70', 80'	1.02	1.10	1.09
	90', Bottom	1.00	0.99	

REMARKS:
* Measured wrt a Cu/CuSO4 half cell.
- Normal water level
- Exterior coating - good
- Internal coating: walls - good
  roof - needs recoated
- Structural spiders, ladder corroding.
- Anode string 3 severed below top anode.

FORM D

Figure 7-4

SOIL RESISTIVITY MEASUREMENTS						
S End of Bldg 19		Proposed Tank Farm				DATE: 20 April 90
NO.	LOCATION	RESISTIVITY (OHM-CM) AVERAGE TO A DEPT OF			pH	REMARKS
		2.5 FT	5 FT	10 FT		
1	15' South of SW corner	2000	2200	2300	—	Rocky Soil
2	100' S of SW corner	1900	2400	2000	7.2	
3	150' S of SW corner	2100	2100	2200	—	
4	15' S of SE corner	8000	8100	7900	—	Rocky Soil
5	120' S of SE corner	5000	4800	4500	7.9	

ADDITIONAL REMARKS

Ground is relatively moist due to recent rains.

FORM E

Figure 7-5

CHAPTER 8

REQUIRED SURVEYS AND TESTING

8-1. Annual cathodic protection performance survey

An annual cathodic protection survey is required to make sure that complete protection is given to all structures needing cathodic protection. The first survey should be made within 6 months after installing the cathodic protection system. This survey will indicate the adequacy of the newly installed system. Note all deficiencies and initiate corrective actions immediately. The annual performance survey is concerned only with structures with installed cathodic protection systems or structures which are insulated or isolated electrically from another structure to prevent electrolysis due to dissimilar metals.

a. Potential measurements survey. Ample potential measurements must be taken to make sure that all facilities and structures are protected. The time required to make the survey will vary according to the size of the installation and existing cathodic protection. Normally, it is expected that approximately 6 to 8 weeks with two people will be needed at larger installations. It is important to take the potential measurements at the same locations each time. The correct location of the reference electrode is directly over the structure tested. When testing a sacrificial anode system, the reference electrode should be located as described in paragraph 4-2. Use the "Structure-to-Electrolyte Potential Measurements and Dielectric Testing" form to record potential data.

b. Measurement Comparisons. Make comparisons between recent measurements and those taken at the last annual survey to determine where changes have occurred and to plan the necessary corrections. Determine the required DC output of each impressed current system by the trial and error method. First, make sure that the low potential points are at a protective level and then that the higher potential points do not exceed the maximum allowed in the applicable NACE Recommended Practice. The current output determined in this manner should be kept throughout the following year by adjusting the DC voltage of the rectifier as needed.

c. Underground Piping Systems. Underground piping systems or structures that are not cathodically protected but have dielectric insulators installed to prevent electrolysis must be checked annually to ensure the effectiveness of electrical isolation. Change the heading on the "ON" and the "OFF" columns to read "STREET SIDE" and "BUILDING SIDE" and perform a potential test on each side of the insulator.

d. Water Storage Tanks. Physically inspect anodes in water storage tanks annually. Also, make structure-to-water potential measurements annually and adjust rectifier current to provide complete protection. A properly cleaned rubber raft may be used to get readings. Readings may also be taken through hand holes in the roof, if properly located. The amount of current needed to give complete protection will be determined from the annual survey and should be maintained throughout the following year by monthly adjustments, if required.

(1) Location of the anodes in water tanks is not uniform in all installations and depends upon design, size, and other criteria. At least four test points on the tank wall must be set up at locations farthest from the anodes. Also, four points on the tank bottom farthest from the anodes must be established. Take readings between anode sections along the standpipe wall if the opening is not covered by a screen.

(2) Testing of the water tanks should be done by recording potentials within 6-inches of the tank surfaces. In the riser pipe, the test should be made half way between each anode and within 6-inches of the wall.

(3) For the annual inspection and potential measurements inside the water storage tanks, use the "Tank-to-Water Potential Measurements" form, to record the tank-to-water potential at each electrode

location. Tank-to-water potential readings with the rectifier on should be made on rectifier systems. During annual checks of operating systems, "off" readings should be taken, to gauge the voltage drop in the water.

e. Underground and above ground tank potentials. Structure-to-soil potential measurements should be made to eight (8) locations for each buried tank. The multimeter can be attached to any above ground piping that is continuous and has electrical continuity with the tank. The reference electrode should be placed at locations around the tank as described below:

(1) Tanks covered by earth. The reference electrode should be placed in contact with soil, at each location indicated in figure 8-1. To facilitate contact with soil in paved areas, it may be necessary to drill holes and install pavement inserts, such as those depicted in figure 4-36. Four measurements should be taken along the sides of the tank, and a measurement should be taken at each end of the tank. Two measurements should be taken over the center line of the tank. Each measurement location should be as close as possible to the outside limit of the tank being measured. For multiple tank installations, measurement locations such as depicted in figure 5-9 can be taken.

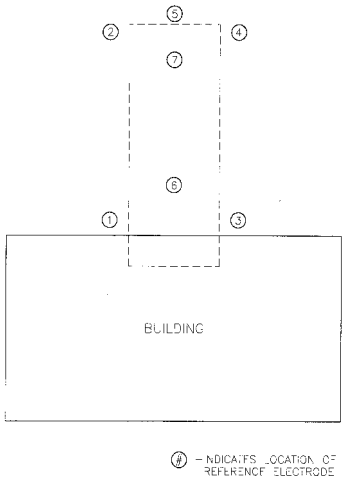

Figure 8-1

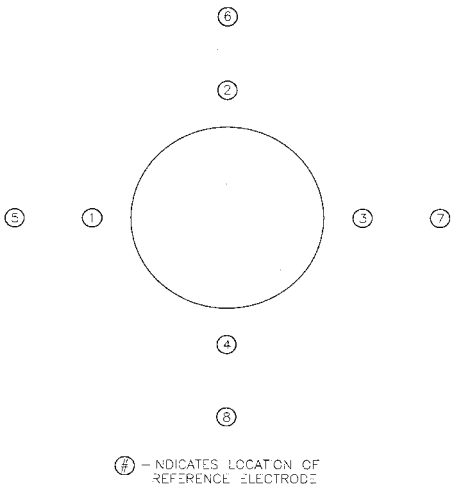

Figure 8-2

(2) Tanks covered by earth and a building. The above procedure should be followed with the exception of the end under the building (see Figure 8-2). The measurements required for the portion of the tank beneath the building may be eliminated. However, if at all feasible, the technique illustrated in paved areas, consisting of installing pavement inserts through the pavement (or floor slab) should be utilized. Potential measurements should not be made with the reference electrode on the surface of a concrete slab, as these measurements are often erroneous.

(3) Above ground tanks. Potential measurements should be made in each quadrant of the tank as shown in figure 8-3. The measurement closest to the tank should have the reference electrode approximately 5 feet from the side. The reference electrode for the outer measurements should be

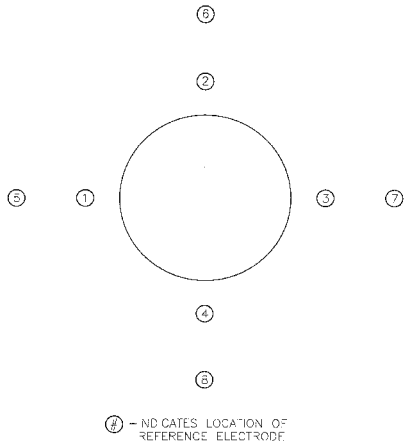

Figure 8-3

located a distance equal to one-half of the tank diameter from the tank.

8-2. Monthly surveys

a. Read and record rectifier voltage output meters. Record transformer tap settings. Turn unit off.

b. Use the "Rectifier Data" form to record all readings. A binder containing these forms with the monthly rectifier output readings should be kept in each rectifier case and these forms should also be on file at the Corrosion Engineer's office.

c. Visually inspect all above grade corrosion control facilities, checking for loose connections, overheating, etc.

d. For the next step, the unit should be turned on and the meters in the rectifier should be checked using portable voltmeters and ammeters which are known to be accurate.

e. Record the rectifier unit efficiency.

f. Measure and record current flow through all stray current interference drainage bonds.

8-3. Rectifier adjustments

a. Frequently, polarization may allow reduction of rectifier current output while maintaining complete protection of the structure. Decreased outputs will extend the life of the groundbeds and reduce operating costs.

b. After rectifier adjustments are made, resurvey the areas in question to determine that all affected areas are protected. All survey results and rectifier settings must be verified by the corrosion engineer and kept in the cathodic protection facility jacket folder and the cathodic protection annual performance booklet.

8-4. Cathodic protection communications

One of the most important items in connection with foreign line (non-Army) crossings is the matter of communications with the representatives of the foreign line companies involved, so that information relative to changes in corrosion control systems on existing foreign lines will be available. It is equally important to be aware of plans for new foreign pipeline construction in the vicinity of the installation. Plans for cooperative interference tests and corrective bond design can be taken when there is danger of interference damage to either party.

8-5. Stray current interference

It is also important that the corrosion engineer be alert for any information pertinent to stray current interference effects in the area. Any change in the use of direct current on railway, transit lines, or in mining operations, for example, will enable the engineer to make corrosion control required modifications when these changes take place. If resistance bonds have been installed between pipelines for foreign line interference mitigation, they require testing during the annual cathodic protection performance survey.

8-6. Rectifier area of influence

Use the map or maps in the comprehensive master plan to show graphically the limits of protection provided by each rectifier. Show the areas protected by two rectifiers by cross-hatching. The following are procedures to determine limits for each rectifier area:

a. Install a circuit current interrupter at the most appropriate point. The interrupter should be set to provide unequal "on" and "off" periods, so they may be easily recognized while measuring potentials. All other rectifiers should be turned off. NOTE: The rectifier should be turned off only a short period of time while attaching the current interrupter, so that the structure will not depolarize. The maximum difference between "on" and "off" measurements of the pipe-to-soil potential occurs near the groundbed. As potential measurements are made along the line away from the groundbed, the change in potential provided by the rectifier will become smaller. When a point is reached where the "on" potential is no longer above 0.85 volts, the "limit of adequate protection" has been established for that particular rectifier. The area of influence of the rectifier extends somewhat beyond that limit, to a point where a change in potential is no longer measured.

b. Record the potential measurements of all facilities, for both the "off" and "on" readings, throughout the system being tested.

c. Plot the points of "limit of adequate protection" (-0.85 volts) determined in subparagraph "a" for each rectifier system on a map similar to that used in the comprehensive master plan. Join all points by a line so that the rectifier is completely encircled. Use contrasting colors for adjoining rectifier systems.

d. Continue the above process for each rectifier installed. The areas which are covered by two or more circles receive protective current from two or more rectifiers. When increasing the potential of a point in those areas, each of the rectifiers supplying current to that area must be adjusted. If the low potential point is closer to one limit line than the other, the amount of adjustment should be made accordingly.

8-7. Groundbed maintenance

Groundbed maintenance must consist of visual inspections to make sure that there has been no disturbance of the earth above the anode bed and along the line of the header cable.

a. If construction work is to occur in the vicinity of the groundbed, stake the location of each anode and the route of the header cable.

b. If routine tests show a marked increase in resistance, make measurements to locate the break or anode that is not working.

c. Failed anodes may be located as described in paragraph 5-25b.

8-8. Deep anode beds

It would be advantageous for the current output of all anodes to be maintained equally. This will ensure the useful life of each anode to be the same.

a. Measure and record the current output of each anode annually. Make all measurements with the current on. Record the first set of measurements in the column marked "on".

b. If the current from any one anode exceeds the maximum recommended limit of current per square foot of anode surface, a resistor should be placed in series with that anode and should be adjusted to limit the current flow.

c. After resistor adjustments have been made, the voltage of the rectifier should be adjusted until the total current output reads the required amount to obtain adequate protection indicated by structure-to-earth potential measurements. Record the new rectifier setting on the Rectifier Data Form.

d. Re-test the current output of all anodes. Record all anode output readings on the reverse side of the Rectifier Data Form, or on a separate data sheet.

8-9. Magnesium anodes

Magnesium anodes must be carried as a standby level supply item where consumption does not justify a demand level. They should be installed as needed to maintain a protective potential. Measurements of anode current at test stations should be performed and recorded on the - "Test Station Data - Sacrificial Anode System" form.

8-10. Cased crossing maintenance

Where one metal pipe of a larger size is used as a casing to mechanically protect a metallic carrier pipeline, it is very important to insulate the carrier pipeline from the casing. Should a short circuit occur, the casing will divert the cathodic protection current from the carrier pipeline to the casing. This will leave the carrier pipeline without cathodic protection allowing corrosion to occur. Where casings exist, test station wires must be installed on both the carrier pipe and the casing to allow for testing.

8-11. Test station maintenance

Test Stations are very important parts of the Cathodic Protection System, since they are the main locations at which measurements can be made. It is, therefore, essential that they be kept in good order.

a. Broken wires at test points present a problem if the break is not at the surface terminal box. If the test station is located close to the pipe connections, the effort required to locate and repair the trouble is a simple excavating job. Damaged conductors may be located using a pipeline locator.

b. In many instances of shorted leads and some instances of open leads, it is more economical to install new leads than to locate and repair the fault.

8-12. Federal safety standards

Design and maintenance of facilities for natural gas, POL, and other hazardous pipeline facilities must comply with the minimum federal safety standards. Rules and regulations of the standards are outlined in the Federal Register, Volume 35, Number 161, Department of Transportation, 49 CFR, Parts 190-195, Hazardous Materials Regulation Board, Transportation of Natural and Other Gas by Pipeline, Minimum Safety Standards.

8-13. Amendments to standards

Amendments to the standards are available for clarification and updating of the standards. They can be obtained from the Department of Transportation, Office of Pipeline Safety, Washington, D.C. 20596, or on the Office of Pipeline Safety website at ops.dot.gov.

Appendix A

REFERENCES

Federal Regulations

Underground Storage Tanks (USTs) - Corrosion control is required by EPA regulations (40 CFR Part 280).

Natural gas piping - Corrosion control is required by DOT regulations (49 CFR Part 192).

Army Regulations, Guidance Documents and Sources of Information:

Army Regulation (AR) 420-49, Utility Services, April 1997.
AR 200-1, Environmental Protection and Enhancement, Section 5-7, Underground Storage Tanks, April 1990.
Engineer Technical Letter (ETL) 110-3-474, Cathodic Protection, July 1996.
ETL 111-9-10(FR), Cathodic Protection System Using Ceramic Anodes, January 1990.
Technical Manual (TM) 5-811-7, Electrical Design, Cathodic Protection.
Corps of Engineers Guide Specifications (CEGS) 13202, Fuel Storage Systems.
CEGS 16640, Cathodic Protection System (Sacrificial Anode).
CEGS 16641, Cathodic Protection System (Steel Water Tanks).
CEGS 16642, Cathodic Protection System (Impressed Current).
Technical Note (TN) 200-1-1, Cathodic Protection of USTs.
Public Works Technical Bulletin (PWTB) 200-1-2, Upgrading USTs to 1998 Standards.
PWTB 420-49-3, Cathodic Protection Potential Measurements and IR Drop.
PWTB 420-49-4, Corrosion Control Acceptance Criteria for Cathodic Protection Systems.
PWTB 420-49-6, The Use of Plastic Plumbing Materials: Lessons Learned.

Air Force Guidance:

Military Handbook MIL-HDBK-1136/1 (Air Force Handbook 32-1290(I)), Cathodic Protection Field Testing, 1 February 1999.

Other DOD:

MIL-HDBK 1004/10, Electrical Engineering, Cathodic Protection.
National Association of Corrosion Engineers (NACE), International:
Recommended Practice (RP) 0169, Control of External Corrosion on Underground or Submerged Metallic Piping Systems.
RP 0285, Control of External Corrosion on Metallic Buried, Partially Buried, or Submerged Liquid Storage Systems.
RP 0286, Electrical Isolation of Cathodically Protected Pipelines.
RP 0388, Impressed Current Cathodic Protection of Internal Submerged Surfaces of Steel Water Tanks.
RP 0196, Galvanic Anode Cathodic Protection of Internal Submerged Surfaces of Steel Water Tanks.

The U.S. Army Construction Engineering Research Laboratories (USACERL) has developed a number of tools to assist installations in their corrosion control efforts. Fact sheets for the following are available on the USACERL homepage (http://www.cecer.army.mil/):

WPIPER Engineered Management System
Ceramic Coated Anodes
Pipe Corrosion Monitor
Cathodic Protection Diagnostic Program
GPIPER Engineered Management System

Pipe Corrosion Inspection Crawler
Anti-scale/Corrosion Resistant Coating
Fury: An Underground Tank Inspection System

National Association of Corrosion Engineers (NACE) Standards and Guidance:

Control of External Corrosion on Underground or Submerged Metallic Piping Systems-Item No. 21001
Mitigation of Alternating Current and Lightning Effects on Metallic Structures and Corrosion Control Systems-Item No. 21021
Fabrication Details, Surface Finish Requirements, and Proper Design Considerations for Tanks and Vessels to Be Lined for Immersion Service-Item No. 21022
Repair of Lining Systems-Item No. 21028
Extruded Polyolefin Resin Coating Systems with Soft Adhesives for Underground or Submerged Pipe-Item No. 21029
Application of Cathodic Protection for External Surfaces of Steel Well Casings-Item No. 21031
Design Considerations for Corrosion Control of Reinforcing Steel in Concrete-Item No. 21034
Discontinuity (Holiday) Testing of Protective Coatings-Item No. 21038
External Protective Coatings for Joints, Fittings, and Valves on Metallic Underground or Submerged Pipelines and Piping Systems-Item No. 21042
External Cathodic Protection of On-Grade Metallic Storage Tank Bottoms-Item No. 21061
Galvanic Anode Cathodic Protection of Internal Submerged Surfaces of Steel Water Storage Tanks-Item No. 21077
The Control of Corrosion Under Thermal Insulation and Fireproofing Materials - A Systems Approach-Item No. 21084
High-Voltage Electrical Inspection of Pipeline Coatings Prior to Installation-Item No. 21010
Corrosion Control of Underground Storage Tank Systems by Cathodic Protection-Item No. 21030
Electrical Isolation of Cathodically Protected Pipelines-Item No. 21032
Field Measurement of Surface Profile of Abrasive Blast Cleaned Steel Surfaces Using a Replica Tape-Item No. 21035
Inspection of Linings on Steel and Concrete-Item No. 21039
Cathodic Protection of Reinforcing Steel in Atmospherically Exposed Concrete Structures-Item No. 21043
Wax Coating Systems for Underground Piping Systems-Item No. 21013
Metallurgical and Inspection Requirements for Cast Sacrificial Anodes for Offshore Applications-Item No. 21036
Impressed Current Cathodic Protection of Internal Submerged Surfaces of Steel Water Storage Tanks-Item No. 21040
Maintenance and Rehabilitation Considerations for Corrosion Control of Existing Steel-Reinforced Concrete Structures-Item No. 21044
Holiday Detection of Fusion-Bonded Epoxy External Pipeline Coatings of 250 to 760 micrometers (10 to 30 mils)-Item No. 21045
Design, Installation, Operation, and Maintenance of Impressed Current Deep Groundbeds-Item No. 21007
Testing of Embeddable Anodes for Use in Cathodic Protection of Atmospherically Exposed Steel-Reinforced Concrete-Item No. 21225
Holiday Detection of Internal Tubular Coatings of Less Than 250 micrometers (10 mils) Dry Film Thickness-Item No. 21216
Measurement Techniques Related to Criteria for Cathodic Protection on Underground or Submerged Metallic Piping Systems-Item No. 21231

GLOSSARY

Active Metal: Metal that is in a condition in which it tends to corrode.

Anaerobic: Absence of air or uncombined oxygen.

Anion: An ion that carries a negative charge. The chloride ion in seawater is an anion.

Anode: The less noble electrode of an electrolytic cell at which corrosion occurs.

Anode Cap: An electrical insulating cover or coating placed over the lead wire connection of an anode.

Bell Hole: An excavation to expose a buried structure.

Cathodic Protection: A technique to prevent the corrosion of a metal surface by making that surface the cathode of an electrochemical cell.

Continuity Bond: A metallic connection that provides electrical continuity.

Corrosion: The deterioration of a material, usually a metal, because of a reaction with its environment.

Corrosion Cell: Consists of an anode and a cathode immersed in an electrolyte and electrically bonded together. The anode and cathode may be separate metals or dissimilar areas on the same metal.

Corrosion Rate: The speed at which a metal or alloy corrodes. This may be expressed in terms of loss in weight or loss of thickness in a given period of time. The common units are:

1. Inches penetration per year (Ipy.).
2. Mils penetration per year (Mpy.) for loss in thickness.
3. Milligrams per square dekameter per day (Mdd.) for loss in weight. Corrosion rates in terms of thickness change refer to the loss of metal from one side only. Hence, for sheet metal that is exposed to corrosion on both sides, its total corrosion rate would be double the Ipy.

Couple: Two or more dissimilar metals or alloys in electrical contact with each other so that they can act as the electrodes of a cell if they are immersed in an electrolyte.

Current Density: The current per unit area.

Depolarization: Anything that reduces or prevents polarization and thereby acts to maintain the current of a corrosion cell at its initial value. Anodic and cathodic polarization reduce corrosion. Oxygen in seawater is a cathodic depolarizer and thereby accelerates corrosion of steel. High velocity can decrease anodic polarization by removing corrosion products and thus can accelerate corrosion of copper.

Dezincification: Corrosion of an alloy containing zinc in which the zinc is corroded away leaving copper.

Electrical Isolation: The condition of being electrically separated from other metallic structures or the environment.

Electrode: A metal or alloy that is in contact with an electrolyte and serves as the site where the electricity passes in either direction between the electrolyte and metal. The current in the electrode itself is a flow of electrons whereas, in the electrolyte, ions carry electric charges and their orderly

movement in solution constitutes a flow of current in the electrolyte.

Electrode Potential: The potential of an electrode as measured against a reference electrode. The electrode potential does not include any loss of potential in the solution due to current passing to or from the electrodes, that is, it represents the reversible work required to move a unit charge from the electrode surface through the solution to the reference electrode.

Electrolyte: A chemical substance or mixture, usually liquid, containing ions that migrate in an electrical field. For the purpose of this manual, electrolyte refers to the soil or liquid adjacent to and in contact with a buried or submerged metallic structure, including the moisture and other chemicals contained in this publication.

Electromotive: (EMF Series) A list of elements arranged according to their standard electrode potentials. A hydrogen electrode is the standard reference and is placed equal to zero. All potentials are positive or negative with respect to the hydrogen electrode.

Electro-Osmotic Potential Effect: Passage of a charged particle through a membrane under the influence of a voltage. Soil may act as the membrane.

Erosion: Sometimes called impingement corrosion. Destruction of a metal by the combined action of corrosion and abrasion or attrition by a liquid or gas with or without suspended matter.

Film: A thin layer of material that may or may not be visible.

Foreign Structure: Any structure that is not intended as a part of the system of interest.

Galvanic Anode: A metal which, because of its relative position in the electromotive series, when coupled in an electrolyte. These anodes are the current source in one type of cathodic protection.

Galvanic Cell: A cell consisting of two or more dissimilar metals or alloys in contact with the same electrolyte.

Galvanic Series: A list of metals and alloys arranged in order of their relative potentials in a given environment. The order of their arrangement in this list may be different in other environments.

Graphitization: (Graphitic Corrosion) Corrosion of gray case iron in which metallic iron is converted into corrosion products, leaving a residue of intact graphite mixed with iron
corrosion products and other insoluble constituents of cast iron and having **Graphitization** approximately the original dimensions and appearance of the casting.

Half Cell Reference: See **Reference Electrode**

Holiday: A discontinuity of coating that exposes the metal surface to the environment.

Impressed Current: Direct current supplied by a device employing a power source external to the anode system.

Inhibitor: (As Applied To Corrosion) A chemical substance or mixture which when added in small amounts to a solution, markedly decreases corrosion.

Insulating Coating System: All components comprising the protective coating, the sum of which provides effective electrical isolation of the coated structure.

Interference Bond: A metallic connection designed to control electrical current interchange between metallic systems.

Ion: An electrically charged atom or group of atoms.

Isolation: See **Electrical Isolation**.

Line Current: The direct current flowing on a pipeline.

Local Action: Corrosion caused by the flow of galvanic current between points on a metal surface.

Local Cell: A cell in which the driving force is due to the difference in potential between areas on a metal or alloy surface immersed in a electrolyte.

Microampere: 1/1,000,000 of an ampere.

Milliampere: 1/1,000 of an ampere.

Millivolt: 1/1,000 of a volt.

Noble Metal: A metal that is so inert that it is usually found as uncombined metal in nature. It always exhibits a relatively large electropositive potential that is not dependent upon the existence of chemical films on its surface. Platinum, gold, and silver are noble metals.

Open-circuit Potential: The difference in voltage between a structure and a reference electrode under a condition of no current flow.

Oxygen Concentration Cell: A cell existing on a metal surface due to the difference in oxygen concentration in the solution at one point as compared to another. Usually the area in contact with the solution with lower oxygen content, as in crevices, is the more active or anodic area.

Packaged Anode: An anode that is supplied completely surrounded by a selected conductive material. (Prepackaged).

Passive: A relatively inactive state wherein a metal displays a more noble behavior than normally anticipated.

PH: The pH of an electrolyte is a term used to express the effective hydrogen ion concentration. It ranges from pH = 1 to pH = 14. pH = 7 indicates a neutralsolution. Values lower than 7 indicate an acid condition.

Pitting: Localized corrosion taking the form of cavities in the surface.

Polarization: A shift in potential, due to a flow of current. It is a complex reaction due to resistance effects (formation of gas film), alteration of the solution at the metal surface, and other factors.

Potential: The difference in voltage between two points.

Potentiometer: An electrical instrument used to measure voltage or potential without draining current from the surfaces being investigated.

Protective Current Density: The amount of current per unit area required to achieve cathodic protection.

Protective Potential: A term used in cathodic protection to describe the potential as measured against an appropriate half cell at which all anodic corrosion reactions can be assumed to be eliminated and protection achieved.

Reference Electrode: A device whose open-circuit potential is constant under similar conditions of measurement.

Reverse-current Switch: A device that prevents the reversal of direct current through a metallic conductor.

Sacrificial Protection: (Galvanic Protection) Reduction or prevention of corrosion of a metal in an electrolyte by galvanically coupling it to a more anodic metal.

Stray Current: Current flowing through paths other than the intended circuit.

Stray Current Corrosion: Corrosion resulting from direct current flow through paths other than the intended circuit.

Structure-to-Soil Potential: (Pipe-to-Soil Potential) The potential difference between a buried metallic structure and the soil surface which is measured with a half cell reference electrode in contact with the soil.

Structure-to-Structure Potential: The difference in potential between metallic structures in a common electrolyte.

Voltage: An electromotive force or a difference in electrode potentials expressed in volts.