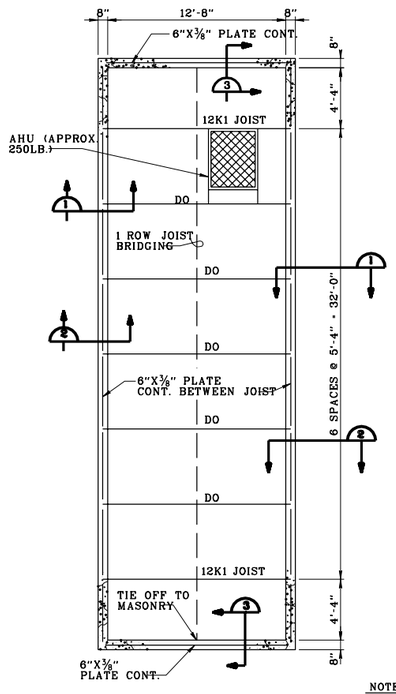

ROOF FRAMING PLAN

SCALE: 1/4 INCH = 1 FOOT

NOTE:
CONTRACTOR SHALL DESIGN AND PROVIDE FRAMING FOR JOIST SUPPORTED EQUIPMENT AND SHALL SUBMIT THE DESIGNS FOR APPROVAL. SEE SHEET M2.6 FOR TYPICAL SEISMIC BRACING

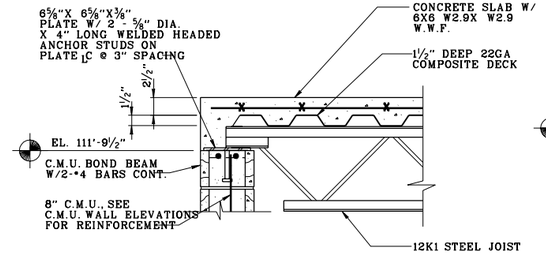

SECTION 1

SCALE: 1 1/2 INCH = 1 FOOT

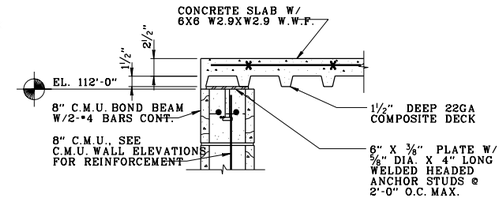

SECTION 2

SCALE: 1 1/2 INCH = 1 FOOT

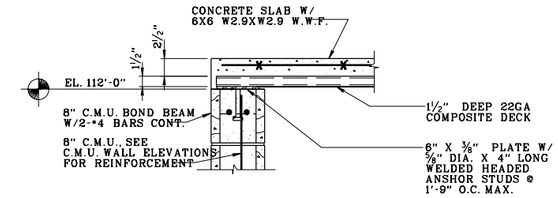

SECTION 3

SCALE: 1 1/2 INCH = 1 FOOT

COMPOSITE STEEL DECK MATERIAL SCHEDULE								
DECK TYPE	MINIMUM THICKNESS	MIN. YIELD STREN.	MIN. SECTION PROPERTIES			MIN. SHEET WIDTH	MIN. SHEET LENGTH	DECK FINISH
			I+	S+	S-			
1 1/2" DEEP COMPOSITE	0.0295 IN.	33 KSI	0.149 IN^4/FT	0.181 IN^3/FT	0.181 IN^3/FT	36"	3 OR MORE SPANS	GALVANIZED

COMPOSITE STEEL DECK FASTENER SCHEDULE	
FASTENER LOCATION	FASTENER REQUIREMENT
DECK TO JOISTS DECK TO WALL PLATES	5/8" MINIMUM DIAMETER PUDDLE WELD AT 12" O.C. MAXIMUM (36/4 PATTERN)
DECK SIDE LAPS	1 1/2" SEAM WELD OR EQUIVALENT MECHANICAL FASTENER PER DECK SPAN

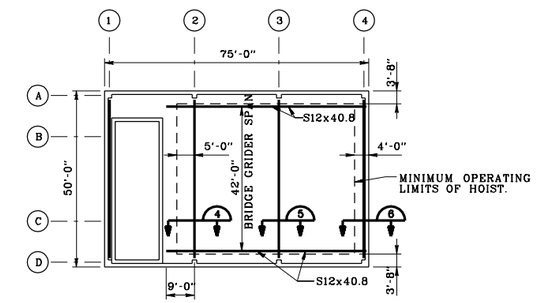

BRIDGE GIRDER LOCATION PLAN

SCALE: 1/16 INCH = 1 FOOT

BRIDGE CRANE NOTES

1. CRANE TYPE: HAND CHAIN DRIVEN UNDERHUNG BRIDGE CRANE
2. HOIST TYPE: HAND GEARED TROLLY HOIST
3. CAPACITY: 1 TON (2000 LBS)
4. SERVICE CLASSIFICATION: CLASS A (INFREQUENT SERVICE)
5. HOOK ELEVATION: 11'-2" (MIN. CLEARANCE). LOW HEADROOM HOIST AND COPED BRIDGE BEAM SHALL BE PROVIDED IF REQUIRED TO MEET HOOK CLEARANCE REQUIREMENTS. COORDINATE WITH METAL BUILDING MANUFACTURER FOR DIMENSIONS OF METAL BUILDING FRAME.
6. END STOPS ENGAGING CRANE BUMPERS ARE PREFERRED. COORDINATE WITH CRANE SUPPLIER AND SUBMIT DETAILS IN ACCORDANCE WITH SPECIFICATIONS.
7. COORDINATE CONNECTION FOR RUNWAY BEAMS TO RIGID FRAME WITH BRIDGE CRANE SUPPLIER AND METAL BUILDING MANUFACTURER.

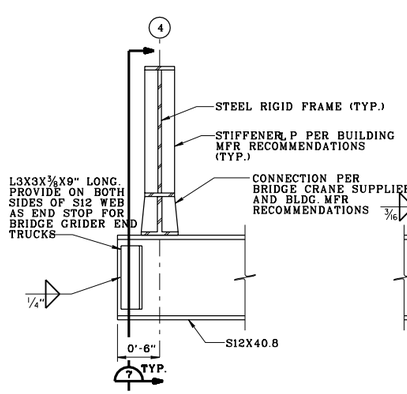

SECTION 4

SCALE: 1 1/2 INCH = 1 FOOT

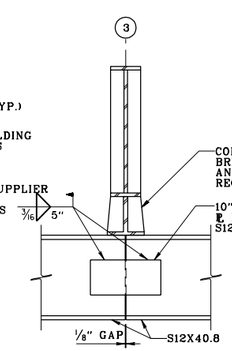

SECTION 5

SCALE: 1 1/2 INCH = 1 FOOT

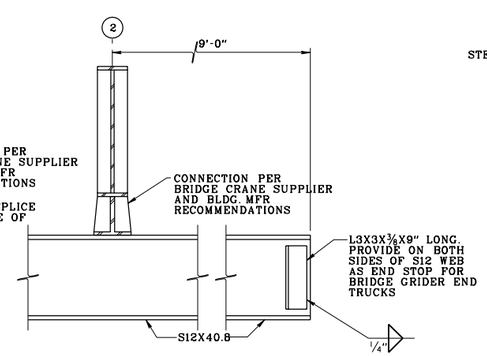

SECTION 6

SCALE: 1 1/2 INCH = 1 FOOT

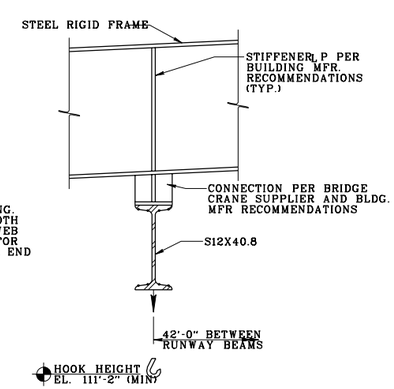

SECTION 7

SCALE: 1 1/2 INCH = 1 FOOT

$$ - THINK VALUE ENGINEERING - $$

REVISIONS			
SYMBOL	DESCRIPTIONS	DATE	APPROVED

ROBERT AND COMPANY 96 POPLAR ST., N.W. ATLANTA, GA 30335	US ARMY ENGINEER DISTRICT CORPS OF ENGINEERS OMAHA, NE	AIR FORCE C.E. SUPPORT AGENCY 139 BARNES DRIVE, SUITE #1 TYNDALL AFB, FL 32403-5319

DESIGNED BY: G.M.J.
DRAWN BY: G.M.J.
CHECKED BY: B.N.H.
REVIEWED BY: B.N.H.
SUBMITTED BY:
CHIEF, STRUC SECTION

AIR FORCE STANDARDS
PRESSURIZED HYDRANT FUELING SYSTEM
TYPE III

CONTROL ROOM ROOF PLAN, SECTIONS AND DETAILS

PLOT SCALE RATIO: 2:3
DESIGN FILE: SD18S301.DGN
DATE: REV. #1 NOV. 1998
SPEC. NO.: 78-24-28-88
DRAWING CODE: AW 78-24-28
SHEET REFERENCE NUMBER: S3.1

COMPUTER AIDED DESIGN & DRAFTING