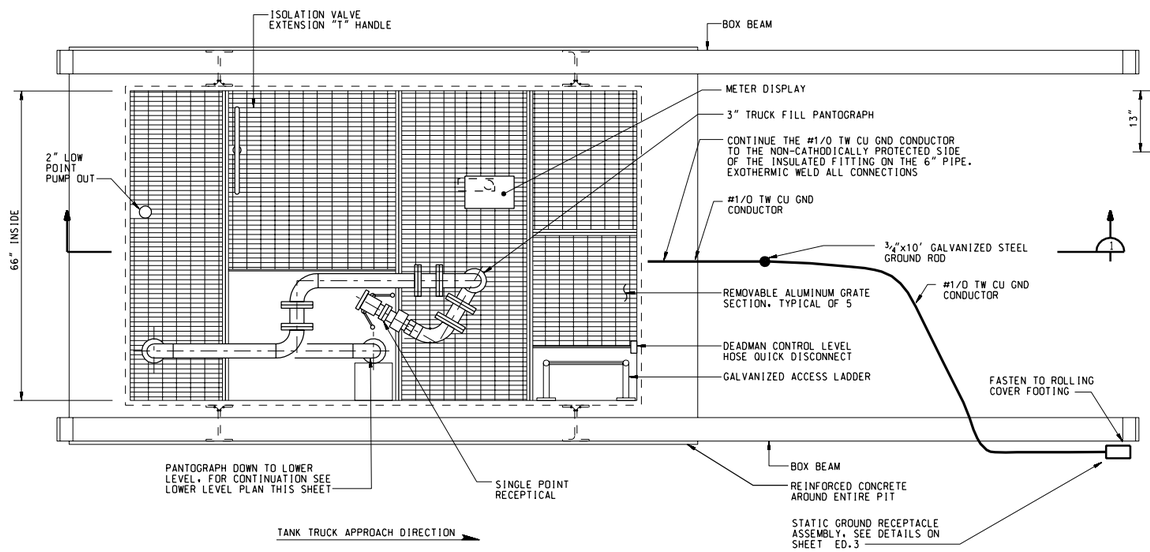

UPPER LEVEL

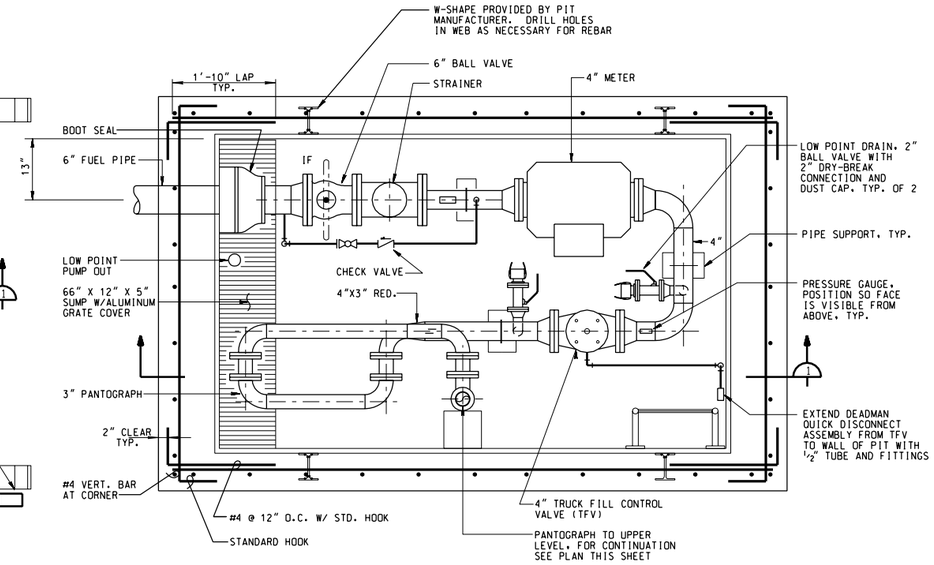

LOWER LEVEL

TRUCK FILL PANTOGRAPH PIT PLAN DETAIL
GENM2.10

SCALE: 1 INCH = 1 FOOT

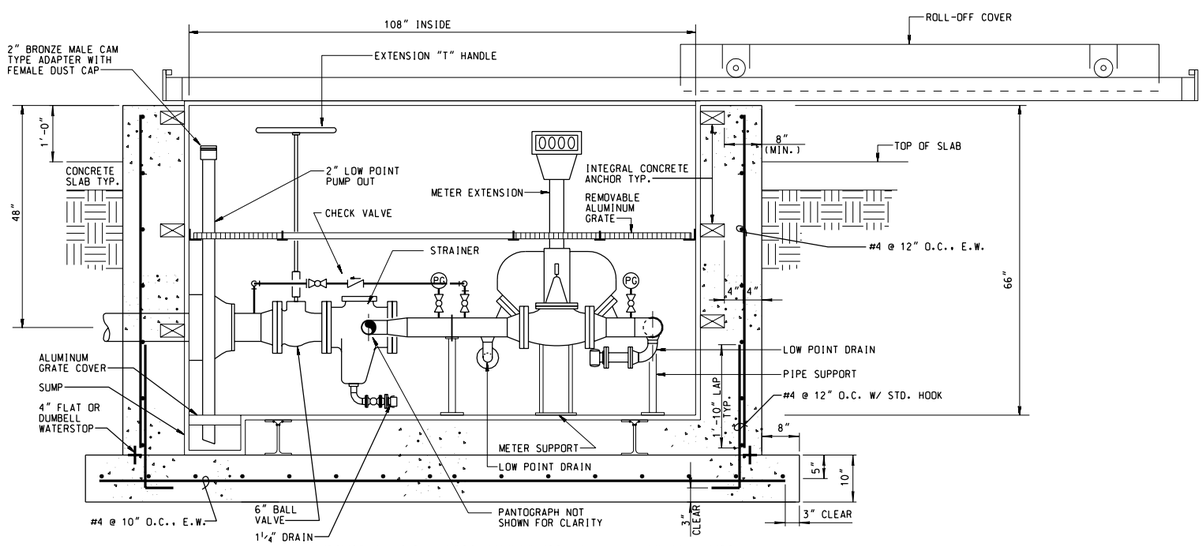

TRUCK FILL PANTOGRAPH PIT - SECTION

SCALE: 1 INCH = 1 FOOT

MATERIAL NOTES:

1. REINFORCED CONCRETE:
   A. CONCRETE: SPECIFIED COMPRESSIVE STRENGTH f'c = 3000 PSI AT 28 DAYS FOR ALL WORK.
   B. REINFORCING BARS: SPECIFIED YIELD STRENGTH Fy = 60 KSI (GRADE 60).

SCALE: 1 INCH = 1 FOOT
12" 6" 0 1'

COMPUTER AIDED DESIGN & DRAFTING

$$ - THINK VALUE ENGINEERING - $$

REVISIONS

SYMBOL	DESCRIPTIONS	DATE	APPROVED

ROBERT AND COMPANY
96 POPLAR ST., N.W.
ATLANTA, GA 30335

US ARMY ENGINEER DISTRICT
CORPS OF ENGINEERS
OMAHA, NE

AIR FORCE C.E. SUPPORT AGENCY
139 BARNES DRIVE, SUITE #1
TYNDALL AFB, FL 32403-5319

DESIGNED BY: J.J.P./G.M.J.
DRAWN BY: P.R.W. K.E.M. G.M.J.
CHECKED BY: M.T.S.
REVIEWED BY: S.G.E.
SUBMITTED BY:
CHIEF, MECH. SECTION

AIR FORCE STANDARDS
PRESSURIZED HYDRANT FUELING SYSTEM
TYPE III

TRUCK FILL PANTOGRAPH PIT

PLOT SCALE RATIO: 1:1
DESIGN FILE: SD18M210.DGN
DATE: REV. #1 NOV. 1998
SPEC. NO.: 78-24-28-88
DRAWING CODE: AW 78-24-28
SHEET REFERENCE NUMBER: M2.10

SD18M210.DGN 11/18/2002 09:57:23 AM