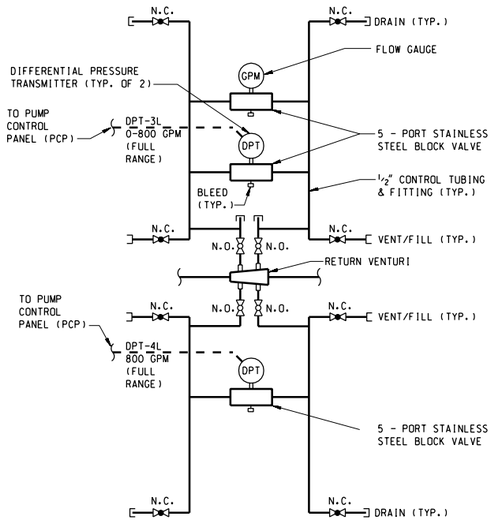

RETURN VENTURI TUBE CONTROL DIAGRAM (M2.1/M2.6)

NO SCALE

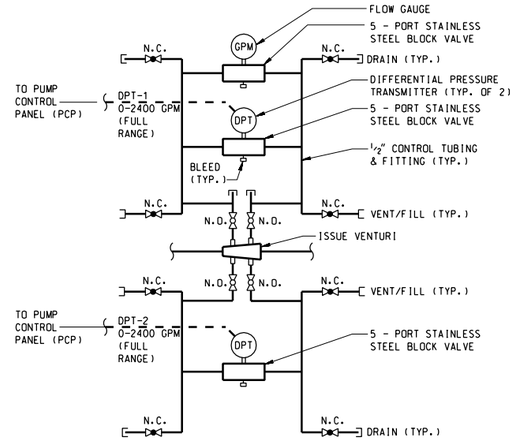

ISSUE VENTURI TUBE CONTROL DIAGRAM (M2.1/M2.6)

NO SCALE

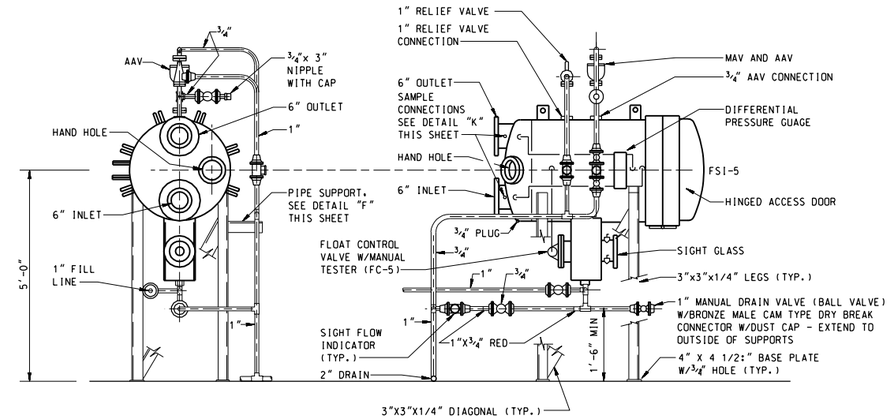

END ELEVATION

SIDE ELEVATION

TYPICAL FOR FSI-1 THRU FSI-5 AND FSR-1 AND FSR-2.

FILTER SEPARATOR DETAILS (M2.1/M2.6, M2.4)

SCALE: 3/4 INCH = 1 FOOT

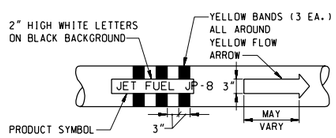

PRODUCT FLOW SYMBOL DETAIL (GEN/M2.6)

NO SCALE

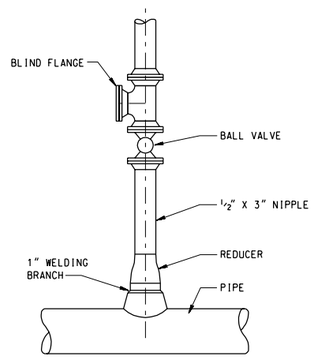

PRESSURE GAGE PIPE CONNECTION DETAIL (GEN/M2.6)

NO SCALE

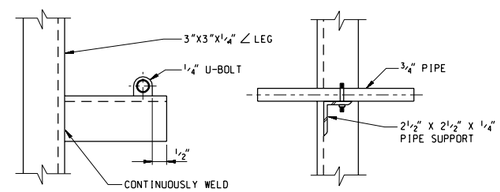

PIPE SUPPORT DETAIL (M2.4/M2.6)

NO SCALE

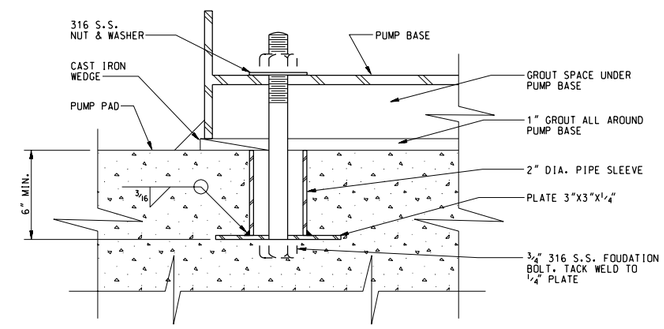

TYPICAL PUMP BASE MOUNTING DETAIL (M1.1/M2.6)

NO SCALE

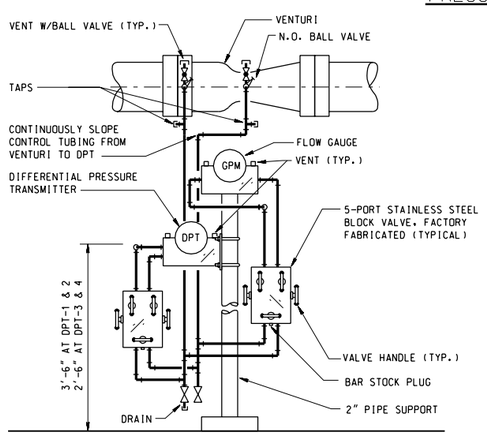

DIFFERENTIAL PRESSURE TRANSMITTER PIPING DETAIL (M2.1/M2.6, M2.3)

NO SCALE

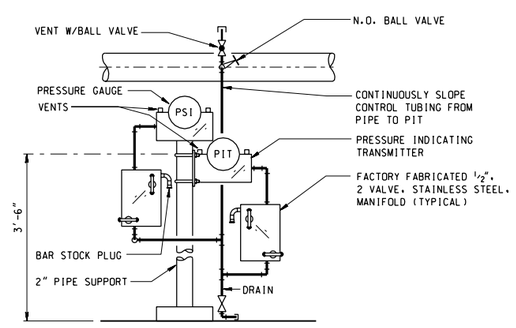

PRESSURE TRANSMITTER PIPING DETAIL (M2.1/M2.6, M2.3)

NO SCALE

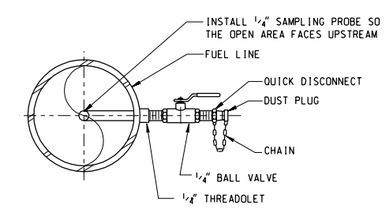

SAMPLE CONNECTION DETAIL (M2.4/M2.6)

NO SCALE

SCALE: 3/4 INCH = 1 FOOT

COMPUTER AIDED DESIGN & DRAFTING

$$ - THINK VALUE ENGINEERING - $$

REVISIONS

SYMBOL	DESCRIPTIONS	DATE	APPROVED

ROBERT AND COMPANY
96 POPLAR ST., N.W.
ATLANTA, GA 30335

US ARMY ENGINEER DISTRICT
CORPS OF ENGINEERS
OMAHA, NE

AIR FORCE C.E. SUPPORT AGENCY
139 BARNES DRIVE, SUITE #1
TYNDALL AFB, FL 32403-5319

DESIGNED BY: J.J.P.
DRAWN BY: P.R.W.
CHECKED BY: M.T.S.
REVIEWED BY: S.G.E.
SUBMITTED BY:
CHIEF, MECH. SECTION

AIR FORCE STANDARDS
PRESSURIZED HYDRANT FUELING SYSTEM
TYPE III

MECHANICAL DETAILS

PLOT SCALE RATIO: 4:3
DESIGN FILE: SD18M206.DGN
DATE: REV. #1 NOV. 1998
SPEC. NO.: 78-24-28-88
DRAWING CODE: AW 78-24-28
SHEET REFERENCE NUMBER: M2.6