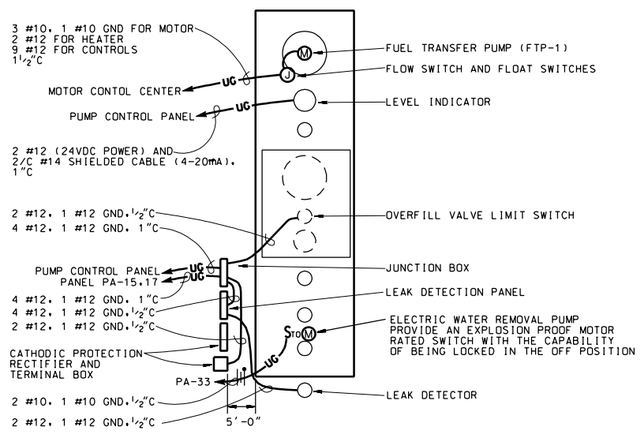

NOTES:

1. THE ENTIRE VOLUME WITHIN THE PIT AT THE PRODUCT RECOVERY TANK SHALL BE CONSIDERED A CLASS 1, DIVISION 1, GROUP D HAZARDOUS LOCATION. ALSO THE VOLUME WITHIN A 5 FOOT RADIUS FROM THE TOP OF THE TANK VENT SHALL BE CONSIDERED A CLASS 1, DIVISION 1, GROUP D HAZARDOUS LOCATION.
2. SEE SHEET ED.1 FOR MOUNTING RACK DETAIL.
3. ALL HOMERUNS GO TO THE PUMPHOUSE CONTROL ROOM.

PRODUCT RECOVERY TANK ELECTRICAL PLAN VIEW

NO SCALE

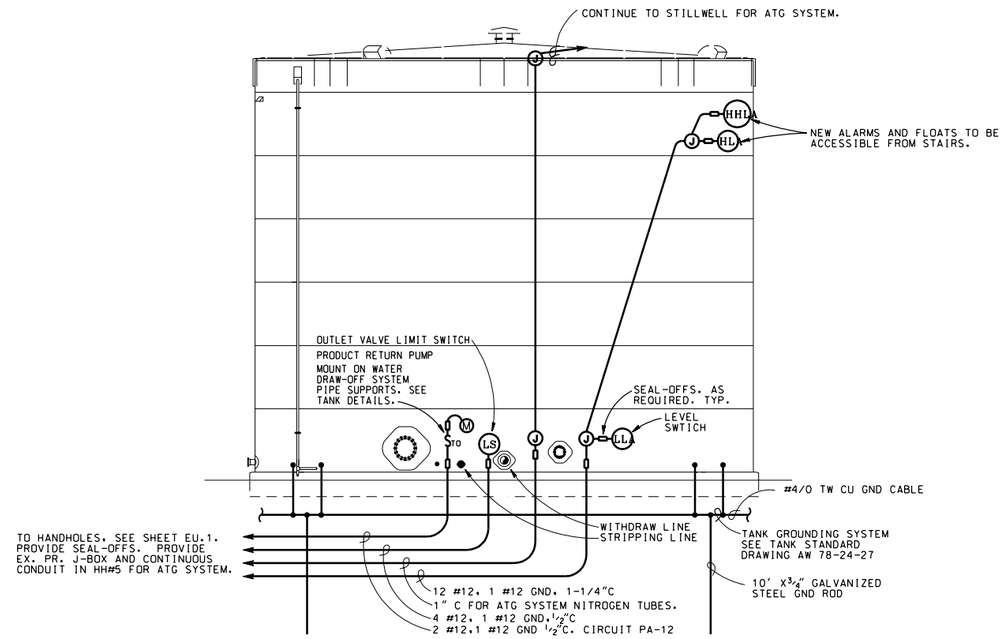

NOTES:

1. SEE TANK DRAWINGS FOR EXACT LOCATION OF LEVEL SWITCHES AND PRODUCT RETURN PUMP.
2. WELD CONDUIT SUPPORT STRUCTURES (UNISTRUT OR EQUAL) TO TANK WALL.
3. SEE ED.1 FOR HAZARDOUS AREA LOCATIONS.
4. SEE NFPA 70 ARTICLE 515-6 FOR SEALING REQUIREMENTS OF THE UG CONDUIT BENEATH THE DIKED AREAS.

STORAGE TANK ELECTRICAL ELEVATION

NO SCALE

NOTES TO DESIGNER:

1. IF ELECTRONIC TYPE LEVEL ALARMS ARE TO BE USED INSTEAD OF THE MECHANICAL FLOAT TYPE INDICATED ON THE STORAGE TANK ELECTRICAL ELEVATION THEN MODIFY THE DETAIL WITH REQUIREMENTS APPROPRIATE TO THE ELECTRONIC LEVEL ALARMS.
2. IF THE ENRAF TYPE ATG SYSSTEM IS TO BE USED INSTEAD OF THE ITT BARTON TYPE SHOWN, THE ABOVE DETAIL SHALL BE MODIFIED TO SHOW APPROPRIATE CONDUITS AND CONDUCTORS FOR THAT TYPE OF ATG SYSTEM.

$$ - THINK VALUE ENGINEERING - $$

REVISIONS

SYMBOL	DESCRIPTIONS	DATE	APPROVED

ROBERT AND COMPANY
96 POPLAR ST., N.W.
ATLANTA, GA 30335

US ARMY ENGINEER DISTRICT
CORPS OF ENGINEERS
OMAHA, NE

AIR FORCE C.E. SUPPORT AGENCY
139 BARNES DRIVE, SUITE #1
TYNDALL AFB, FL 32403-5319

DESIGNED BY: KKT
DRAWN BY: KKT
CHECKED BY: KEA
REVIEWED BY: RJB
SUBMITTED BY:
CHIEF, ELEC SECTION

AIR FORCE STANDARDS
PRESSURIZED HYDRANT FUELING SYSTEM
TYPE III

TANK DETAILS

PLOT SCALE RATIO: 1:12
DESIGN FILE: SD18ED02.DGN
DATE: REV. #1 NOV. 1998
SPEC. NO.: 78-24-28-88
DRAWING CODE: AW 78-24-28
SHEET REFERENCE NUMBER: ED.2

COMPUTER AIDED DESIGN & DRAFTING