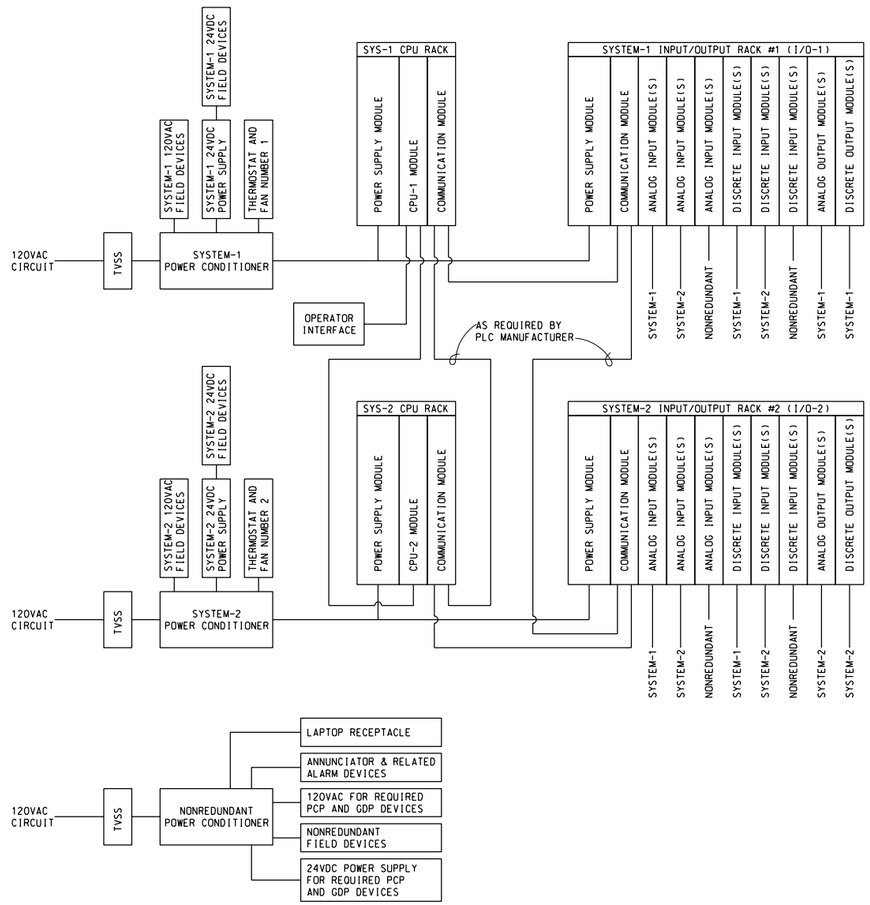

CONTROL SYSTEM BLOCK DIAGRAM

OPERATING TANK #1 HIGH-HIGH LEVEL (RED)	OPERATING TANK #2 HIGH-HIGH LEVEL (RED)	FUEL PUMP #1 FAILURE (WHITE)	FUEL PUMP #4 FAILURE (WHITE)
OPERATING TANK #1 HIGH LEVEL (WHITE)	OPERATING TANK #2 HIGH LEVEL (WHITE)	FUEL PUMP #2 FAILURE (WHITE)	FUEL PUMP #5 FAILURE (WHITE)
OPERATING TANK #1 LOW LEVEL (RED)	OPERATING TANK #2 LOW LEVEL (RED)	FUEL PUMP #3 FAILURE (WHITE)	EMERGENCY STOP (RED)
PRODUCT RECOVERY TANK HIGH LEVEL (WHITE)	SYSTEM-1 PLC FAILURE (WHITE)	SYSTEM-1 DATA FAILURE (WHITE)	(BLANK) (WHITE)
PRODUCT RECOVERY TANK OVERFILL VALVE CLOSED (WHITE)	SYSTEM-2 PLC FAILURE (WHITE)	SYSTEM-2 DATA FAILURE (WHITE)	(BLANK) (WHITE)
PRODUCT RECOVERY TANK LEAK DETECTED (WHITE)	PCP HIGH TEMPERATURE (WHITE)	(BLANK) (WHITE)	(BLANK) (WHITE)

ANNUNCIATOR PANEL LAYOUT

NOTES:

1. (WHITE) - WHITE WINDOW WITH BLACK LETTERS
2. (RED) - RED WINDOW WITH WHITE LETTERS
3. RED WINDOW ALARMS (CRITICAL) SHALL SOUND THE EXTERIOR RESONATING HORN AND PUMP CONTROL PANEL HORN. THE WHITE WINDOW ALARMS (NON-CRITICAL) SHALL SOUND THE EXTERIOR VIBRATING HORN AND THE PUMP CONTROL PANEL HORN.

$$ - THINK VALUE ENGINEERING - $$

REVISIONS

SYMBOL	DESCRIPTIONS	DATE	APPROVED

ROBERT AND COMPANY
96 POPLAR ST., N.W.
ATLANTA, GA 30335

US ARMY ENGINEER DISTRICT
CORPS OF ENGINEERS
OMAHA, NE

AIR FORCE C.E. SUPPORT AGENCY
139 BARNES DRIVE, SUITE #1
TYNDALL AFB, FL 32403-5319

DESIGNED BY: KEA
DRAWN BY: KEA
CHECKED BY: KKT
REVIEWED BY: RJB
SUBMITTED BY:
CHIEF: ELEC SECTION

AIR FORCE STANDARDS
PRESSURIZED HYDRANT FUELING SYSTEM
TYPE III

CONTROL SYSTEM DIAGRAMS

PLOT SCALE RATIO: 1:12
DESIGN FILE: SD18E803.DGN
DATE: REV. #1 NOV. 1998
SPEC. NO.: 78-24-28-88
DRAWING CODE: AW 78-24-28
SHEET REFERENCE NUMBER: E8.3

COMPUTER AIDED DESIGN & DRAFTING