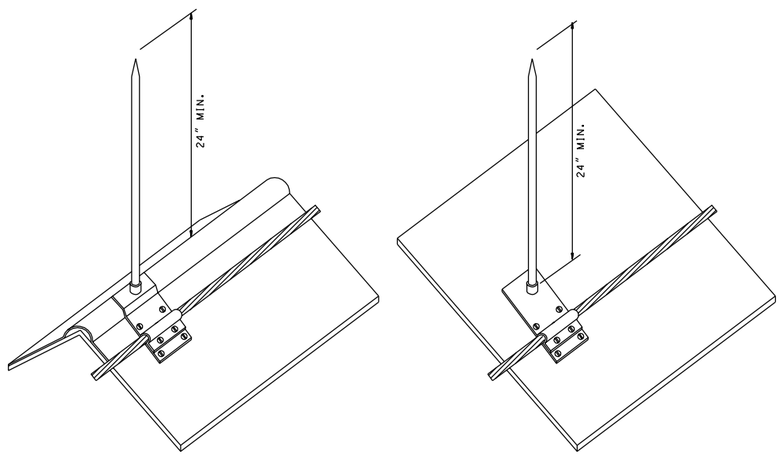

LIGHTNING PROTECTION POINT SLOPED MOUNTING DETAIL 1 E4.1E7.1
NO SCALE

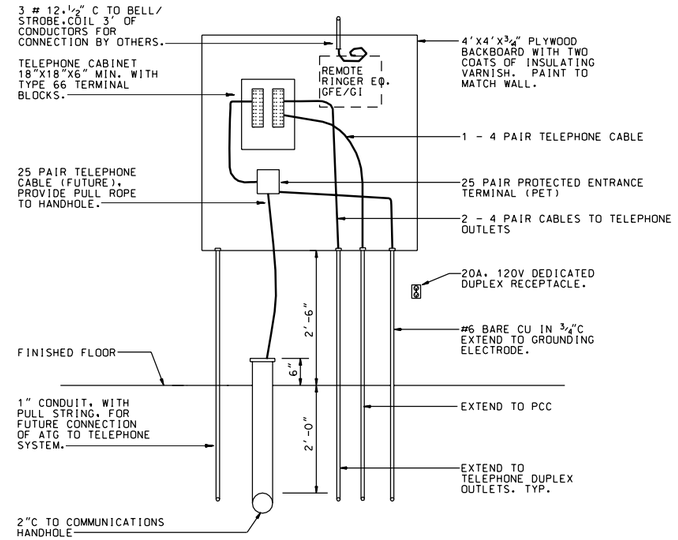

TELEPHONE BACKBOARD ELEVATION
NO SCALE

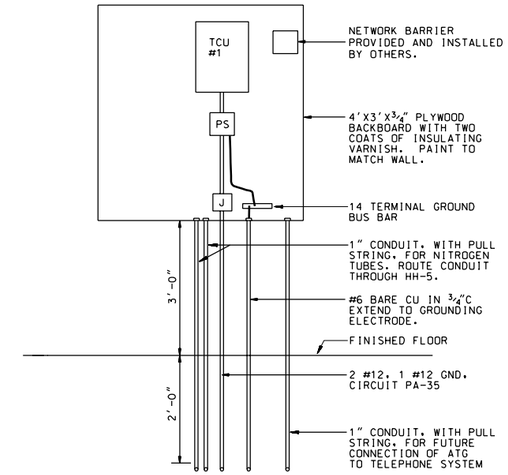

THE TANK CONTROL UNIT (TCU) AND POWER SUPPLY (PS) ARE PROVIDED BY SPEC. SECT. 15050. ALL CONDUIT FOR ATG SYSTEM SHALL BE RIGID STEEL. (GALVANIZED ABOVEGROUND AND PVC COATED UNDERGROUND).

AUTOMATIC TANK GAUGING SYSTEM BACKBOARD ELEVATION
NO SCALE

NOTES TO DESIGNER

1. IF THE ENRAF TYPE ATG SYSTEM IS TO BE USED INSTEAD OF THE ITT BARTON TYPE, THE ABOVE DETAIL SHOULD BE MODIFIED TO SHOW THE APPROPRIATE REQUIREMENTS FOR THAT TYPE OF ATG SYSTEM.

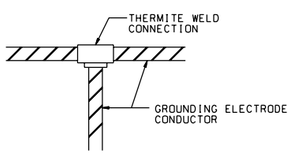

CABLE-TO-CABLE GROUNDING CONNECTION DETAIL 2 E4.1E7.1
NO SCALE

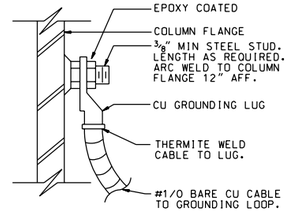

STEEL COLUMN GROUNDING DETAIL 4 E4.1E7.1
NO SCALE

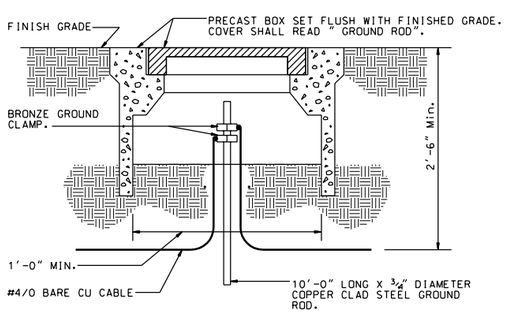

GROUND ROD BOX DETAIL 3 E4.1E7.1
NO SCALE

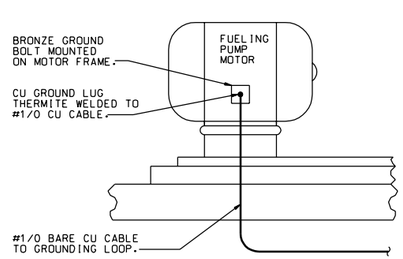

FUELING PUMP MOTOR GROUNDING DETAIL 5 E4.1E7.1
NO SCALE

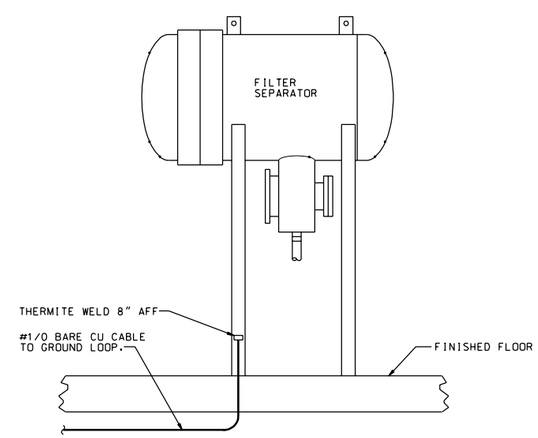

FILTER SEPARATOR GROUNDING DETAIL 6 E4.1E7.1
NO SCALE

$$ - THINK VALUE ENGINEERING - $$

REVISIONS

SYMBOL	DESCRIPTIONS	DATE	APPROVED

ROBERT AND COMPANY
96 POPLAR ST., N.W.
ATLANTA, GA 30335

US ARMY ENGINEER DISTRICT
CORPS OF ENGINEERS
OMAHA, NE

AIR FORCE C.E. SUPPORT AGENCY
139 BARNES DRIVE, SUITE #1
TYNDALL AFB, FL 32403-5319

DESIGNED BY: KEA
DRAWN BY: KEA
CHECKED BY: KKT
REVIEWED BY: RJB
SUBMITTED BY:
CHIEF: ELEC SECTION

AIR FORCE STANDARDS
PRESSURIZED HYDRANT FUELING SYSTEM
TYPE III

ELECTRICAL DETAILS

PLOT SCALE RATIO: 1:1
DESIGN FILE: SD18E701.DGN
DATE: REV. #1 NOV. 1998
SHEET REFERENCE NUMBER: E7.1
SPEC. NO.: 78-24-28-88
DRAWING CODE: AW 78-24-28

COMPUTER AIDED DESIGN & DRAFTING

SD18E701.DGN 11/18/2002 09:49:28 AM