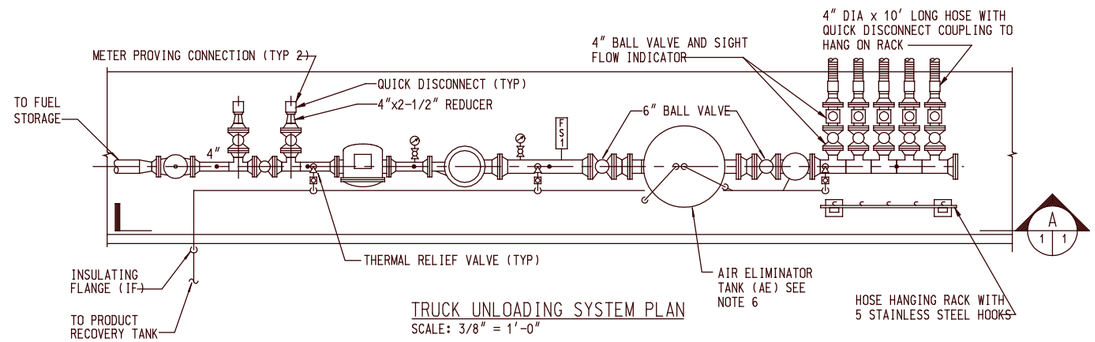

TRUCK UNLOADING SYSTEM PLAN
SCALE: 3/8" = 1'-0"

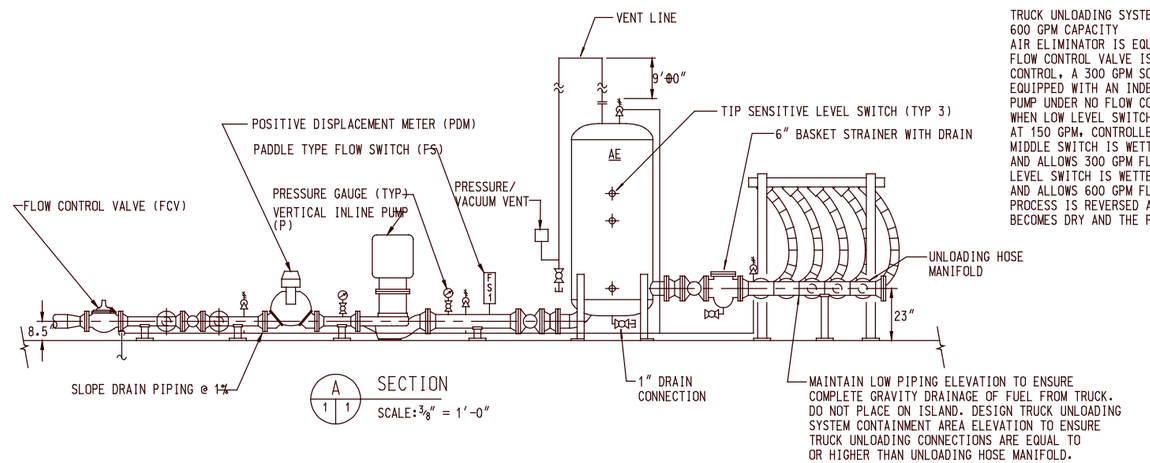

A 1 1 SECTION
SCALE: 3/8" = 1'-0"

SEQUENCE OF OPERATION

TRUCK UNLOADING SYSTEM SEQUENCE OF OPERATION:
600 GPM CAPACITY
AIR ELIMINATOR IS EQUIPPED WITH THREE TIP SENSITIVE LEVEL SWITCHES.
FLOW CONTROL VALVE IS EQUIPPED WITH A 150 GPM MECHANICAL PILOT CONTROL, A 300 GPM SOLENOID AND A 600 GPM SOLENOID. PUMP IS EQUIPPED WITH AN INDEPENDENT FLOW SWITCH WHICH WILL SHUT OFF PUMP UNDER NO FLOW CONDITIONS.
WHEN LOW LEVEL SWITCH IS WETTED, PUMP IS ENABLED AND WILL PUMP AT 150 GPM, CONTROLLED BY THE 150 GPM MECHANICAL PILOT. WHEN MIDDLE SWITCH IS WETTED, THE 300 GPM SOLENOID IS ENERGIZED, OPENS, AND ALLOWS 300 GPM FLOW THROUGH THE VALVE. WHEN HIGH LEVEL LEVEL SWITCH IS WETTED, THE 600 GPM SOLENOID IS ENERGIZED, OPENS, AND ALLOWS 600 GPM FLOW THROUGH THE VALVE.
PROCESS IS REVERSED AS TANK LEVEL DROPS, UNTIL LOW LEVEL SWITCH BECOMES DRY AND THE PUMP SHUTS OFF.

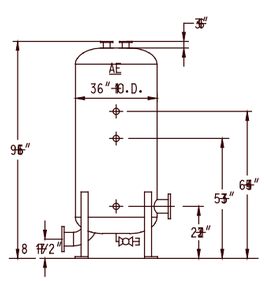

AE AND TIP LEVEL SWITCH DIMENSIONS

GENERAL NOTES:

1. PROVIDE SAMPLING CONNECTIONS AND PRESSURE GAUGES AS SHOWN OR AS DIRECTED BY COMMAND FUELS ENGINEER.
2. SEE MIL-HDBK-1022 FOR ADDITIONAL REQUIREMENTS.
3. PIPING AND EQUIPMENT (EXCEPT AS NOTED) MATERIALS OF CONSTRUCTION SHALL BE AS DIRECTED BY COMMAND FUELS ENGINEER.
4. AE-1 SHALL BE PROVIDED WITH DUAL SIGHT GLASSES AND OUTLET BAFFLE.
5. NUMBER OF OFF-LOAD HOSES: MINIMUM OF 2, MAXIMUM OF 5.
6. DESIGN PRESSURE - 90 PSI @ 250°F & -20°F VESSEL SHALL BE DESIGNED AND CONSTRUCTED IN ACCORDANCE WITH ASME CODE, SECTION VIII, DIV. 1 FOR UNFIRED PRESSURE VESSELS, NON LABELED. VESSEL SHALL BE CARBON STEEL WITH INTERNAL EPOXY COATING.

REVISIONS

SYM.	DESCRIPTION	DATE	APPROVED

A/E ETD
LB DESIGN -
JB DRAFTED -
MF REVIEW -
TS CHIEF ARCH./ENGR.
PROJECT MANAGER
FIRE PROTECTION
QUALITY CONTROL
BRANCH MANAGER
DESIGN DIRECTOR

Robert and Company
Architects Engineers Planners
96 Poplar Street, N.W. Atlanta, Georgia 30335-6001
A/E CONTRACT NO. N62467-95-D-1100
APPROVED DATE
ACTIVITY - SATISFACTORY TO
APPROVED DATE
FOR EFD. FOR COMMANDER NAVFAC
SEAL

DEPARTMENT OF THE NAVY
NAVAL FACILITIES ENGINEERING COMMAND
ATLANTIC DIVISION
NORFOLK, VIRGINIA
NAVAL STATION
DEFINITIVE
STANDARD

TRUCK UNLOADING SYSTEM
PLAN, SECTION AND GENERAL NOTES

CODE I.D. NO. 800 SIZE D
SCALE: —
EFD NO. —
STA. PROJ. NO. —
SPEC. NO. —
CONSTRN. CONTR. NO. —
NAVFAC DRAWING NO. 1404005
SHEET — OF —
1 OF 1

RAC JOB NO. 99009-00

Filename: navystd7.dwg
Plot Scale: 32.000000
Plot Date: 01/11/00
Plot Time: 14:47:36