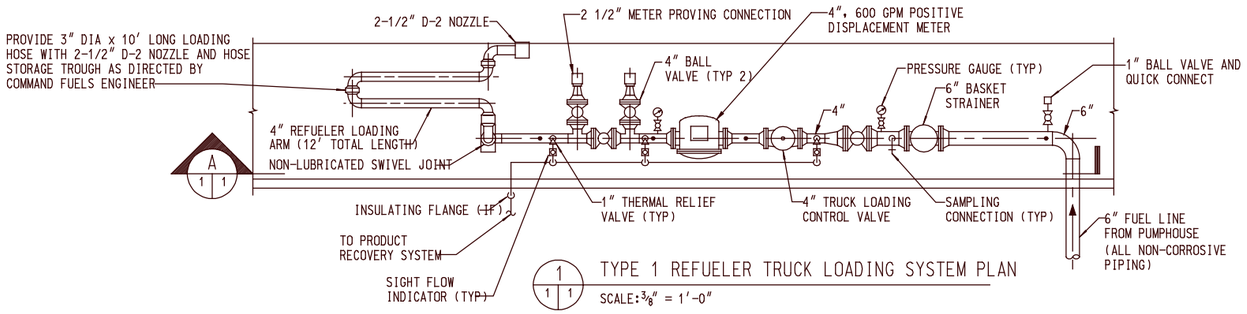

1 / 1 TYPE 1 REFUELER TRUCK LOADING SYSTEM PLAN

SCALE: 3/8" = 1'-0"

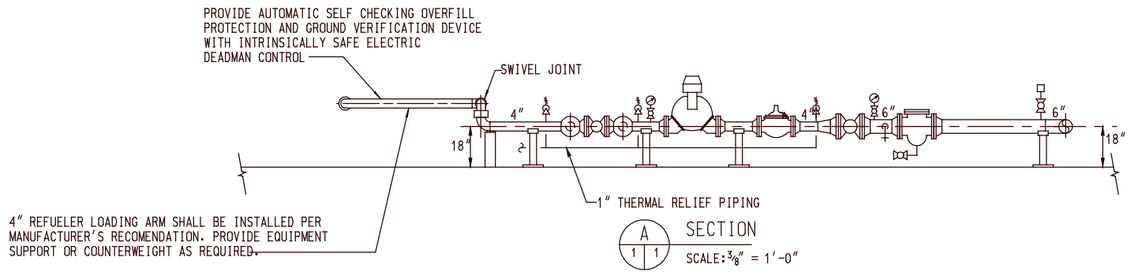

1 / 1 SECTION

SCALE: 3/8" = 1'-0"

GENERAL NOTES:

1. PROVIDE THERMAL RELIEF BETWEEN ISOLATED PIPING SECTIONS.
2. PROVIDE SAMPLING CONNECTIONS AND PRESSURE GAUGES AS SHOWN OR AS DIRECTED BY COMMAND FUELS ENGINEER.
3. SEE MIL-HDBK-1022 AND NFGS 15194 FOR ADDITIONAL REQUIREMENTS.
4. PROVIDE EMERGENCY EYEWASH FACILITIES PER OSHA REGULATIONS.
5. PIPING MATERIALS SHALL BE 100% NON-CORROSIVE IE STAINLESS STEEL OR ALUMINUM. WHERE PERMITTED BY MIL HDBK 1022, CARBON STEEL OR INTERNALLY COATED CARBON STEEL PIPING MAY BE USED IF DIRECT BY COMMAND FUELS FACILITY ENGINEER.
6. 30 SECOND STATIC RELAXATION TANK REQUIRED FOR JP-5. AT 600 GPM, TANK CAPACITY EQUALS 300 GALS.
7. PROVIDE A HIGH PERFORMANCE WAFER TRUNION VALVE W/ 165°F FUSIBLE LINK AT GROUND LEVEL WHEN PIPING RISES AT FUELING ISLANDS.
8. TYPE I WHEN REFUELER FILL STAND IS CONSTRUCTED AS A BRANCH OFF AN AIRCRAFT DIRECT FUELING SYSTEM USING ALL NON-CORROSIVE PIPING.
9. TYPE 2 WHEN REFUELER FILL STAND IS SUPPLIED FROM STORAGE VIA AN INTERNALLY EPOXY COATED OR UNCOATED CARBON STEEL SYSTEM.

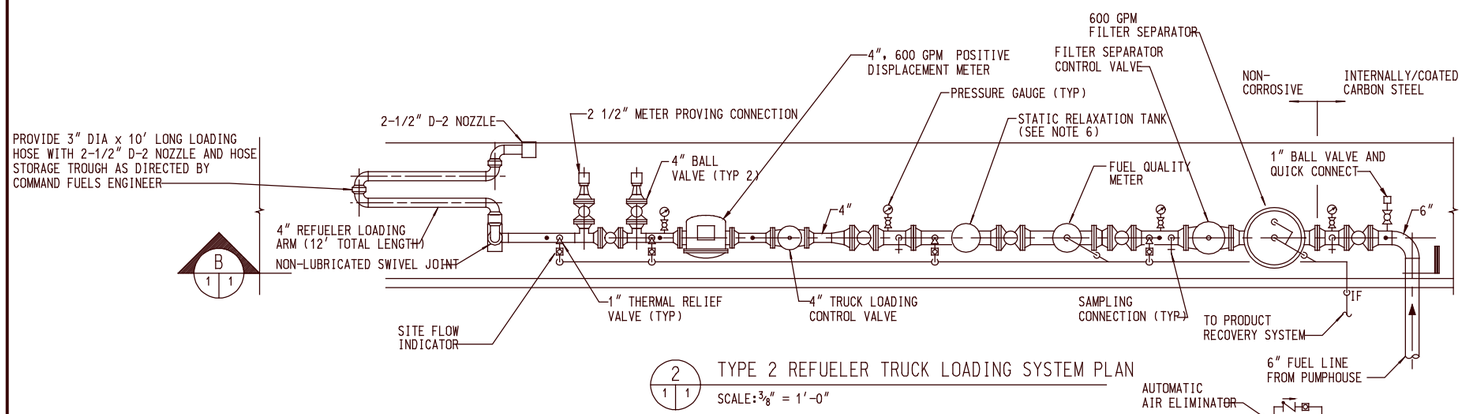

2 / 1 1 TYPE 2 REFUELER TRUCK LOADING SYSTEM PLAN

SCALE: 3/8" = 1'-0"

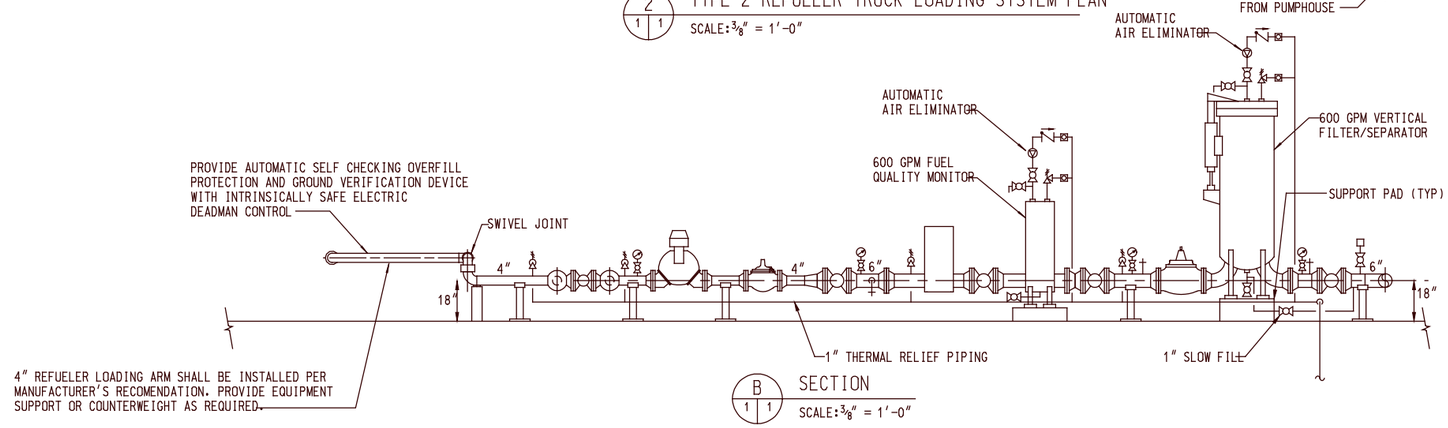

1 / 1 SECTION

SCALE: 3/8" = 1'-0"

SYM.	DESCRIPTION	DATE	APPROVED
	REVISIONS		

A/E CONTRACT NO. N62467-95-D-1100

Robert and Company Engineers, Architects, Planners
56 Taylor Street, N.W. Atlanta, Georgia 30335-6001

DEPARTMENT OF THE NAVY — NAVAL FACILITIES ENGINEERING COMMAND
ATLANTIC DIVISION — NORFOLK, VIRGINIA
NAVAL STATION — STANDARD
DEFINITIVE

REFUELER TRUCK LOADING SYSTEM
PLANS, SECTIONS AND GENERAL NOTES

CODE I.D. NO. 80091 SIZE D
SCALE: —
EFD NO. —
STA. PROJ. NO. —
SPEC. NO. —
CONSTRN. CONTR. NO. —
NAVFAC DRAWING NO. 1404004
SHEET — OF —
1 OF 1

RAC JOB NO. 99009-00

Filename: navystd6.dwg
Plot Scale: 32.000000
Plot Date: 01/11/00
Plot Time: 14:47:09