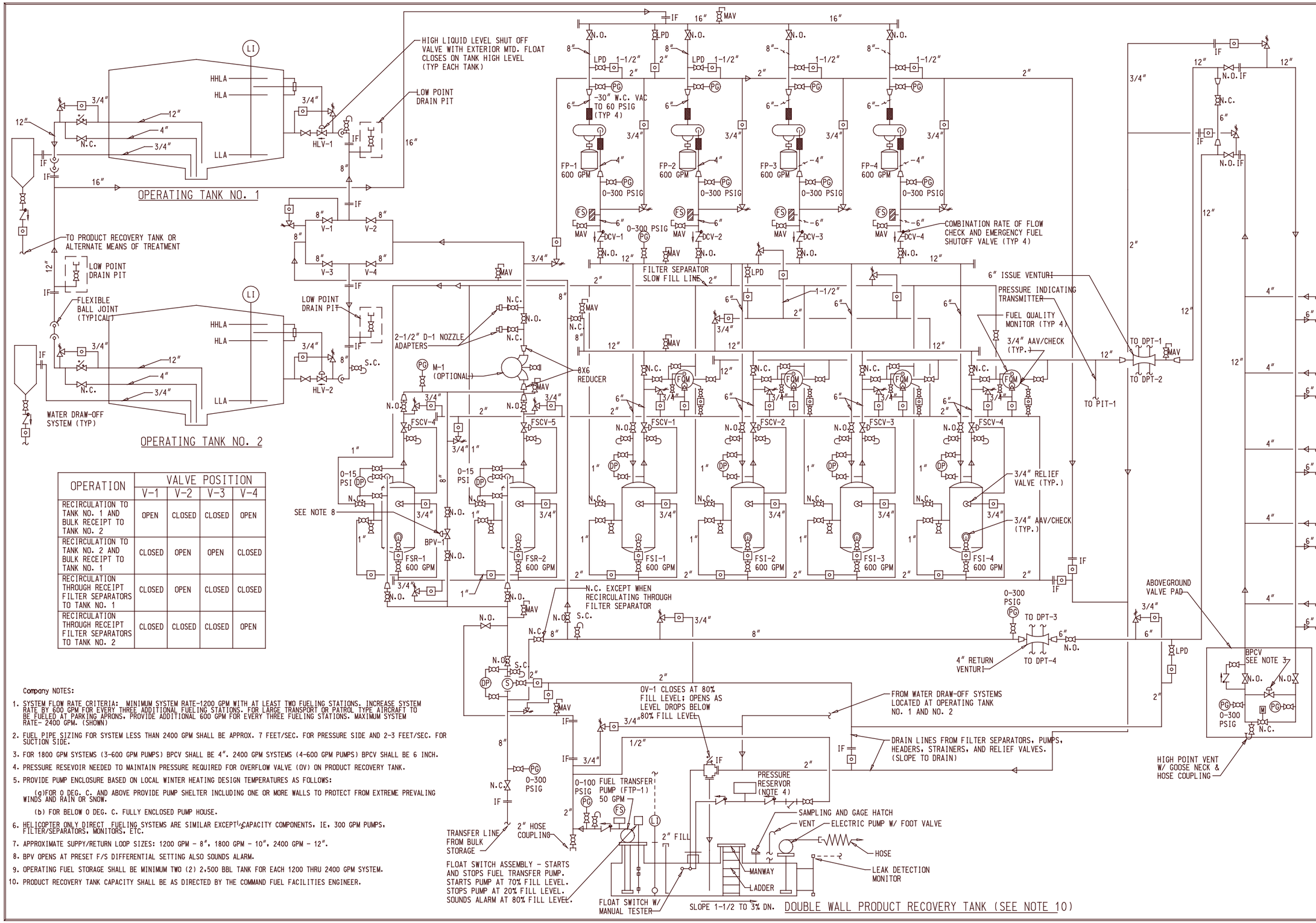

OPERATION	VALVE POSITION			
	V-1	V-2	V-3	V-4
RECIRCULATION TO TANK NO. 1 AND BULK RECEIPT TO TANK NO. 2	OPEN	CLOSED	CLOSED	OPEN
RECIRCULATION TO TANK NO. 2 AND BULK RECEIPT TO TANK NO. 1	CLOSED	OPEN	OPEN	CLOSED
RECIRCULATION THROUGH RECEIPT FILTER SEPARATORS TO TANK NO. 1	CLOSED	OPEN	CLOSED	CLOSED
RECIRCULATION THROUGH RECEIPT FILTER SEPARATORS TO TANK NO. 2	CLOSED	CLOSED	CLOSED	OPEN

Company NOTES:

1. SYSTEM FLOW RATE CRITERIA: MINIMUM SYSTEM RATE-1200 GPM WITH AT LEAST TWO FUELING STATIONS. INCREASE SYSTEM RATE BY 600 GPM FOR EVERY THREE ADDITIONAL FUELING STATIONS. FOR LARGE TRANSPORT OR PATROL TYPE AIRCRAFT TO BE FUELED AT PARKING APRONS, PROVIDE ADDITIONAL 600 GPM FOR EVERY THREE FUELING STATIONS. MAXIMUM SYSTEM RATE- 2400 GPM. (SHOWN)
2. FUEL PIPE SIZING FOR SYSTEM LESS THAN 2400 GPM SHALL BE APPROX. 7 FEET/SEC. FOR PRESSURE SIDE AND 2-3 FEET/SEC. FOR SUCTION SIDE.
3. FOR 1800 GPM SYSTEMS (3-600 GPM PUMPS) BPCV SHALL BE 4". 2400 GPM SYSTEMS (4-600 GPM PUMPS) BPCV SHALL BE 6 INCH.
4. PRESSURE RESEVOIR NEEDED TO MAINTAIN PRESSURE REQUIRED FOR OVERFLOW VALVE (OV) ON PRODUCT RECOVERY TANK.
5. PROVIDE PUMP ENCLOSURE BASED ON LOCAL WINTER HEATING DESIGN TEMPERATURES AS FOLLOWS:
   (a)FOR 0 DEG. C. AND ABOVE PROVIDE PUMP SHELTER INCLUDING ONE OR MORE WALLS TO PROTECT FROM EXTREME PREVALING WINDS AND RAIN OR SNOW.
   (b) FOR BELOW 0 DEG. C. FULLY ENCLOSED PUMP HOUSE.
6. HELICOPTER ONLY DIRECT FUELING SYSTEMS ARE SIMILAR EXCEPT CAPACITY COMPONENTS, IE, 300 GPM PUMPS, FILTER/SEPARATORS, MONITORS, ETC.
7. APPROXIMATE SUPPY/RETURN LOOP SIZES: 1200 GPM - 8", 1800 GPM - 10", 2400 GPM - 12".
8. BPV OPENS AT PRESET F/S DIFFERENTIAL SETTING ALSO SOUNDS ALARM.
9. OPERATING FUEL STORAGE SHALL BE MINIMUM TWO (2) 2,500 BBL TANK FOR EACH 1200 THRU 2400 GPM SYSTEM.
10. PRODUCT RECOVERY TANK CAPACITY SHALL BE AS DIRECTED BY THE COMMAND FUEL FACILITIES ENGINEER.

REVISIONS

DESCRIPTION	DATE	APPROVED

Robert and Company Architects Engineers Planners
Atlanta, Georgia 30335-6001
56 Poplar Street, N.W.

A/E CONTRACT NO. N62467-95-D-1100

APPROVED — DATE
ACTIVITY - SATISFACTORY TO
APPROVED — DATE
FOR EFD. FOR COMMANDER NAVFAC

DEPARTMENT OF THE NAVY
NAVAL STATION
DEFINITIVE

NAVAL FACILITIES ENGINEERING COMMAND
NORFOLK, VIRGINIA
STANDARD

ATLANTIC DIVISION

AIRCRAFT DIRECT FUELING SYSTEM FLOW DIAGRAM

CODE I.D. NO. 800 SIZE D
SCALE: NONE
EFD NO. —
STA. PROJ. NO. —
SPEC. NO. —
CONSTRN. CONTR. NO. —
NAVFAC DRAWING NO. 1404001
SHEET — OF —
2 OF 4

RAC JOB NO. 99009-00

Filename:
Plot Scale:
Plot Date:
Plot Time: