AIR HANDLING UNIT SCHEDULE

NO.	ZONE NO.	TYPE	OUTDOOR AIR CFM	TOTAL CFM STANDARD AIR	MINIMUM EXTERNAL STATIC PRESSURE WATER COLUMN	MINIMUM FAN MOTOR H.P.	HEATING: TOTAL HEATING LOAD BTUH	HEATING: ENTERING AIR DRY BULB °F	HEATING: LEAVING AIR DRY BULB °F	HEATING: WATER: MAXIMUM GPM	HEATING: WATER: MAXIMUM PRESSURE DROP (FT)	COOLING: TOTAL COOLING LOAD BTUH	COOLING: ENTERING AIR: DRY BULB °F	COOLING: ENTERING AIR: WET BULB °F	COOLING: LEAVING AIR: DRY BULB °F	COOLING: LEAVING AIR: WET BULB °F	SUCTION TEMPERATURE	SEE NOTE
1	1	HEATING & AIR CONDITIONING	960	6560	1.00"	3	182,000	62.7	88.3	9.1	7.0	190,000	81.0	64.8	55.5	55.0	45°F	1 THRU 7
1	2	HEATING & AIR CONDITIONING	960	5475	0.75"	2	203,000	58.6	92.8	10.2	7.0	190,000	80.9	66.8	56.2	55.1	45°F	1 THRU 7
1	3	HEATING & AIR CONDITIONING	960	5120	1.00"	2	233,000	55.0	96.9	11.7	7.0	179,000	80.5	67.1	56.5	54.6	44°F	1 THRU 7
1	4	HEATING & AIR CONDITIONING	960	4660	1.00"	2	236,000	51.5	98.2	11.8	7.0	151,000	80.2	66.2	55.8	55.0	45°F	1 THRU 7
2	1	HEATING & AIR CONDITIONING	960	6615	1.00"	3	184,000	62.7	88.3	9.2	7.0	192,000	81.0	64.8	56.0	55.2	45°F	1 THRU 7
2	2	HEATING & AIR CONDITIONING	960	5370	0.75"	2	203,000	58.3	93.1	10.2	7.0	196,000	80.9	66.8	55.4	54.9	45°F	1 THRU 7
2	3	HEATING & AIR CONDITIONING	960	4940	1.00"	2	233,000	54.5	98.0	11.7	7.0	187,000	80.5	67.1	55.0	54.5	44°F	1 THRU 7
2	4	HEATING & AIR CONDITIONING	960	4640	1.00"	2	237,000	51.4	98.5	11.9	7.0	156,000	80.2	66.2	55.6	54.9	45°F	1 THRU 7

NOTES:

1. UNIT SHALL BE DRAW-THRU ARRANGEMENT.
2. MOTOR DATA: 460 VOLTS, 3 PHASE, 60 CYCLE.
3. HEATING CAPACITIES ARE BASED ON 70°F ROOM AIR, AND 200°F ENTERING WATER.
4. STANDARD SERPENTINE COILS.
5. EXTERNAL STATIC PRESSURES LISTED ABOVE DO NOT INCLUDE FILTER LOSSES. ADD 0.50 INCHES FOR THROW AWAY FILTERS. ADD ANOTHER 1 INCH FOR HIGH EFFICIENCY FILTERS.
7. SEE AIR COOLED CONDENSING UNIT SCHEDULE AND REFRIGERANT PIPING DIAGRAM ON SHEET HV5.

MECHANICAL EQUIPMENT ROOM #111 NOTES:

1. 8" X 8" SUPPLY AIR REGISTER TO BE OPEN IN ZONES 3 AND 4 ONLY FOR FREEZE PROTECTION IN MECHANICAL ROOM.
2. 8" X 8" RETURN AIR REGISTER TO BE OPEN IN ZONES 3 AND 4 ONLY.
3. INSULATE ALL DUCTWORK IN MECHANICAL EQUIPMENT ROOM WITH 1 1/2 POUND DENSITY, 1" THICK FOIL-BACKED FIBERGLASS INSULATION.
4. ELECTRIC STEAM BOILER REQUIRED ONLY ON THE HIGH TEMPERATURE HOT WATER ALTERNATE.
5. SEE HV9 FOR MECHANICAL EQUIPMENT SCHEDULE.

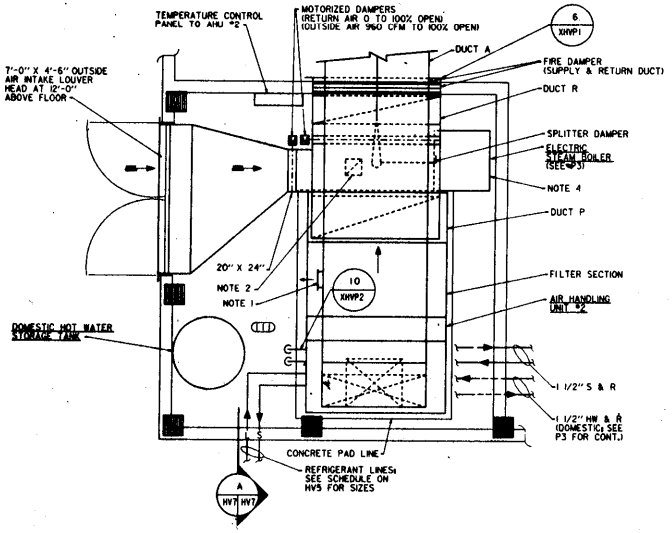

MECHANICAL EQUIPMENT ROOM #111

1/2 INCH = 1 FOOT (ALTERNATE STEAM AND HIGH TEMPERATURE HOT WATER CENTRAL PLANT HEATING PLAN)

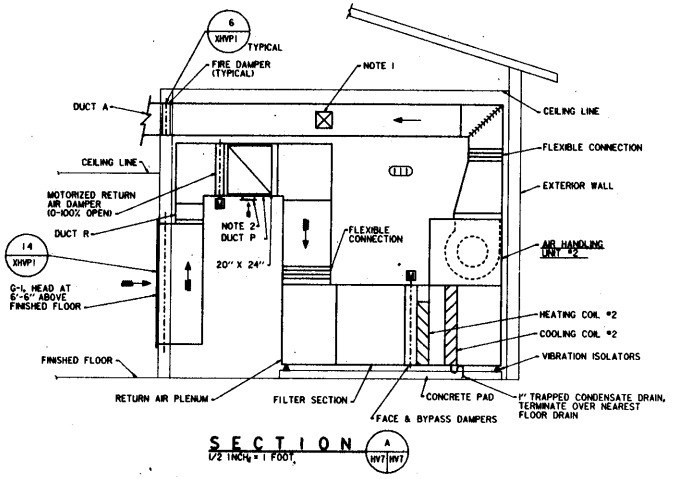

SECTION

1/2 INCH = 1 FOOT

1/2" = 1'-0"

Symbol	Description	Date	Approved
	Revisions		

J. E. SIRRINE COMPANY
ARCHITECT - ENGINEER DIVISION
GREENVILLE, SOUTH CAROLINA

US ARMY ENGINEER DIVISION HUNTSVILLE
CORPS OF ENGINEERS
HUNTSVILLE, ALABAMA

Site adapt A/E:

US Army Corps of Engineers

ARMY MOBILIZATION DESIGNS

WARD - 46 BED

ALT MECH EQUIP ROOM PLAN

Dwn. by: ART	Ckd. by: JML		
Reviewed by: MJC	Date: 14 MAY 84	Sheet reference number:	Design file no.: M086M07 Rev.
Approved by: CMH	Drawing code: M 510-10-F	HV-7	Sheet 7 of 10

T 15 D2