FURNACE AND DX COIL SCHEDULE

NO.	ZONE NO.	TYPE	OUTDOOR AIR CFM	TOTAL CFM STANDARD AIR	MINIMUM EXTERNAL STATIC PRESSURE WATER COLUMN	MINIMUM FAN MOTOR H.P.	HEATING LOAD * (BTUH)	MINIMUM FURNACE CAPACITY (BTUH)	MAXIMUM BURNER H.P.	COOLING: TOTAL COOLING LOAD BTUH	COOLING: ENTERING AIR DRY BULB °F	COOLING: ENTERING AIR WET BULB °F	COOLING: LEAVING AIR DRY BULB °F	COOLING: LEAVING AIR WET BULB °F	SUCTION TEMPERATURE	SEE NOTE
1	1	HEATING & AIR CONDITIONING	960	6560	2.25"	7 1/2	HEAT LOSS 113,765 OUTSIDE AIR 51,840 TOTAL LOAD 165,605	182,000	1/4	190,000	81.0	64.8	55.5	55.0	45°F	SEE FURNACE SCHEDULE NOTES
1	2	HEATING & AIR CONDITIONING	960	5475	1.80"	5	HEAT LOSS 117,204 OUTSIDE AIR 67,392 TOTAL LOAD 184,596	203,000	1/4	190,000	80.9	66.8	56.2	55.1	45°F	SEE FURNACE SCHEDULE NOTES
1	3	HEATING & AIR CONDITIONING	960	5120	2.25"	5	HEAT LOSS 128,625 OUTSIDE AIR 82,944 TOTAL LOAD 211,569	233,000	1/4	179,000	80.5	67.1	56.5	54.6	44°F	SEE FURNACE SCHEDULE NOTES
1	4	HEATING & AIR CONDITIONING	960	4660	2.00"	5	HEAT LOSS 120,968 OUTSIDE AIR 93,312 TOTAL LOAD 214,280	236,000	1/4	151,000	80.2	66.2	55.8	55.0	45°F	SEE FURNACE SCHEDULE NOTES
2	1	HEATING & AIR CONDITIONING	960	6615	2.25"	7 1/2	HEAT LOSS 114,954 OUTSIDE AIR 51,840 TOTAL LOAD 166,794	184,000	1/4	192,000	81.0	64.8	56.0	55.2	45°F	SEE FURNACE SCHEDULE NOTES
2	2	HEATING & AIR CONDITIONING	960	5370	1.80"	5	HEAT LOSS 116,778 OUTSIDE AIR 67,392 TOTAL LOAD 184,170	203,000	1/4	196,000	80.9	66.8	55.4	54.9	44°F	SEE FURNACE SCHEDULE NOTES
2	3	HEATING & AIR CONDITIONING	960	4940	2.25"	5	HEAT LOSS 129,130 OUTSIDE AIR 82,944 TOTAL LOAD 212,074	233,000	1/4	187,000	80.5	67.1	55.0	54.5	44°F	SEE FURNACE SCHEDULE NOTES
2	4	HEATING & AIR CONDITIONING	960	4640	2.00"	5	HEAT LOSS 122,244 OUTSIDE AIR 93,312 TOTAL LOAD 215,556	237,000	1/4	156,000	80.2	66.2	55.6	54.9	44°F	SEE FURNACE SCHEDULE NOTES

FURNACE SCHEDULE NOTES:

1. ALL MOTORS SHALL BE 460 VOLTS, 3 PHASE, 60 HERTZ.
2. (A.) THE OIL BURNER SHALL BE FACTORY MOUNTED AND WIRED. IT SHALL BE EQUIPPED WITH A TWO STAGE FUEL UNIT.
   (B.) THE GAS BURNER SHALL BE FACTORY MOUNTED AND WIRED WITH PRESSURE REGULATOR FOR UP TO 1 PSIG LINE PRESSURE.
3. GAS BTUH OUTPUTS ARE BASED ON A HEAT VALUE OF 1000 BTU PER CUBIC FOOT WATER COLUMN WITH .6 SPECIFIC GRAVITY.
4. OIL BTUH OUTPUTS ARE BASED ON A HEAT VALUE OF 140,000 BTU PER GALLON OF NUMBER 2 FUEL OIL.
5. THE HEATING ZONE(S) SHOWN ON THE HEATING SCHEDULE CORRESPOND WITH THE ANNUAL HEATING DEGREE DAYS SHOWN BELOW
   ZONE 1 = 0 - 3000 DEGREE DAYS
   ZONE 2 = 3000 - 6000 DEGREE DAYS
   ZONE 3 = 6000 - 9000 DEGREE DAYS
   ZONE 4 = 9000- DEGREE DAYS
6. ALL MINIMUM DESIGN EXTERNAL STATIC PRESSURES (S.P.) INCLUDE EXTERNAL AIR FILTER LOSSES.
7. SEE AIR COOLED CONDENSING UNIT SCHEDULE AND REFRIGERANT PIPING DIAGRAM ON SHEET HV5.

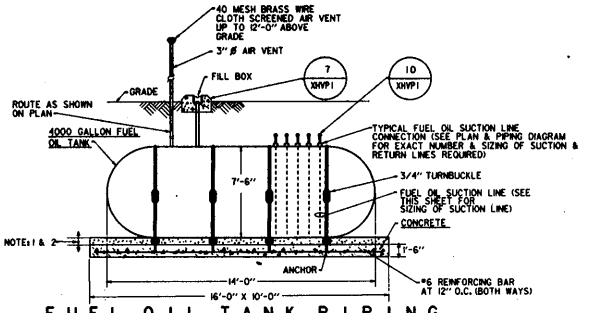

FUEL OIL TANK PIPING CONNECTIONS

NO SCALE

1 / HV4 — HV1, HV2

NOTES:

1. FIBERGLASS TANK SHALL BE SET ON 1'-0" OF PEA GRAVEL PLACED ON TOP OF CONCRETE SLAB.
2. STEEL TANK SHALL BE SET ON 6" OF SAND PLACED ON TOP OF CONCRETE SLAB.
3. DIMENSIONS SHOWN ARE FOR STEEL TANKS. FOR FIBERGLASS TANKS, DIMENSIONS SHOULD BE CORRECTED ACCORDING TO MANUFACTURER.
4. MAXIMUM VERTICAL LIFT FROM BOTTOM OF TANK TO CENTER LINE OF OIL BURNER SHALL BE 13'-0".

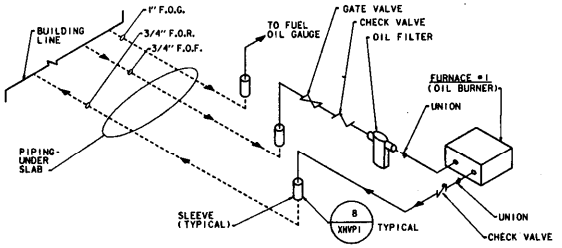

FUEL OIL PIPING DIAGRAM ROOM #150

NO SCALE

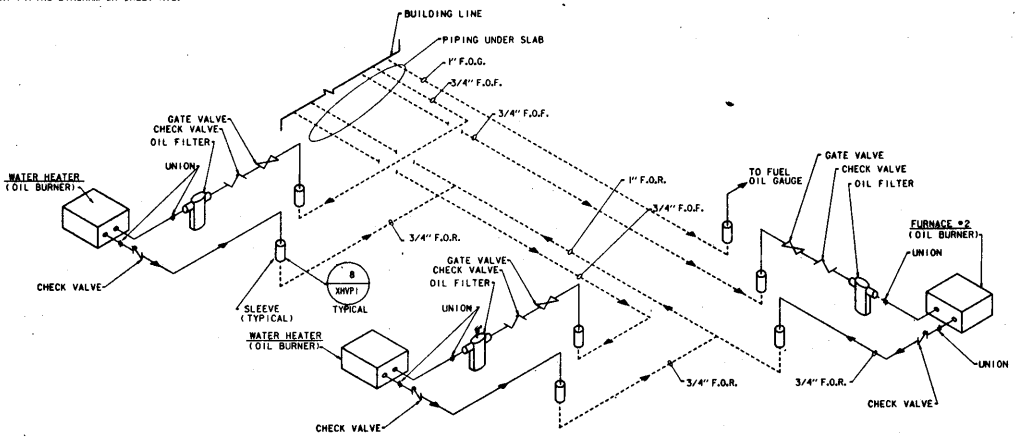

FUEL OIL PIPING DIAGRAM ROOM #111

NO SCALE

Symbol	Description	Date	Approved
	Revisions		

J. E. SIRRINE COMPANY
ARCHITECT - ENGINEER DIVISION
GREENVILLE, SOUTH CAROLINA

US ARMY ENGINEER DIVISION HUNTSVILLE
CORPS OF ENGINEERS
HUNTSVILLE, ALABAMA

Site adapt A/E :

US Army Corps of Engineers

ARMY MOBILIZATION DESIGNS

WARD - 46 BED

SCHEDULES & DIAGRAMS

Dwn. by : ART | Ckd. by : JML

Reviewed by : MJC | Date : 14 MAY 84 | Sheet reference number : HV-4 | Design file no. : M086M04 | Rev.

Approved by : CMH | Drawing code : M 510-10-F | Sheet 4 of 10

T 15 D2