CORPS OF ENGINEERS | 4 | 3 | 2 | 1 | U. S. ARMY

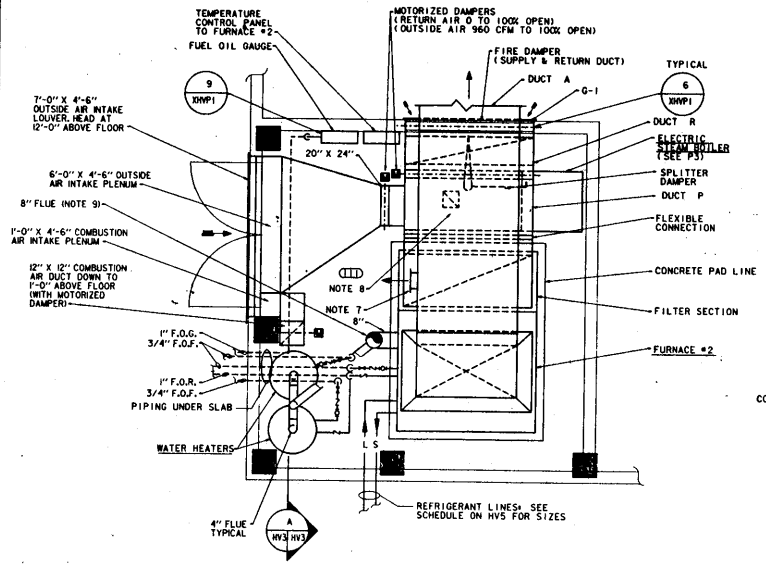

MECHANICAL EQUIPMENT ROOM #111

1/2 INCH = 1 FOOT

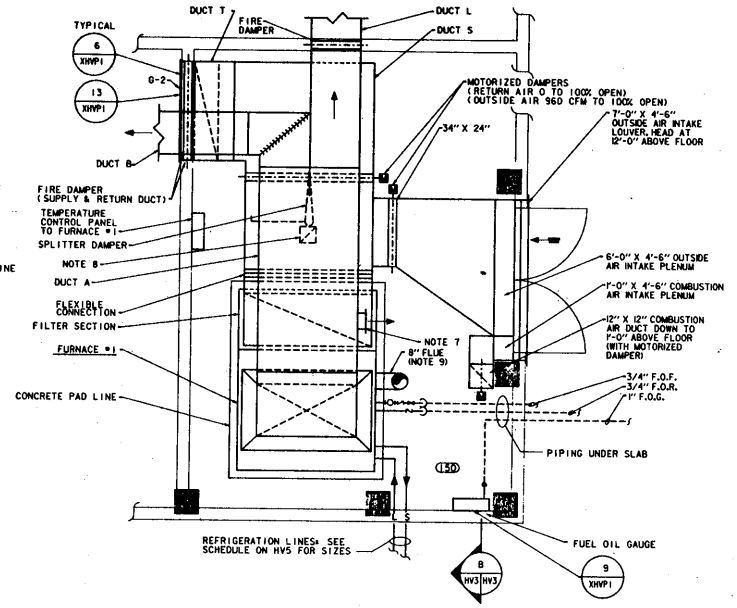

MECHANICAL EQUIPMENT ROOM #150

1/2 INCH = 1 FOOT

MECHANICAL EQUIPMENT ROOM #111 & 150 NOTES:

1. INSULATE ALL DUCTWORK IN MECHANICAL EQUIPMENT ROOM WITH 1 1/2 POUND DENSITY 1" THICK FOIL-BACKED FIBERGLASS INSULATION.
2. SEE SHEET HV4 FOR FUEL OIL PIPING DIAGRAM.
3. MAINTAIN MINIMUM CLEARANCES TO COMBUSTIBLE MATERIALS WITH ALL FLUES AS STATED BY FLUE MANUFACTURER.
4. SUPPORT ALL FLUES ABOVE ROOF AS STATED BY FLUE MANUFACTURER.
5. PIPING FOR FUEL OIL APPEARS ON SHEET HV1, HV2, HV3, & HV4. PIPING FOR NATURAL GAS APPEARS ON SHEETS P2 & P3. CONTRACTOR SHALL PROVIDE THE PIPING AS REQUIRED FOR THE GIVEN BUILDING SITE AND DISREGARD THE OTHER FUEL PIPING AS NOT REQUIRED.
6. FLUE SIZES ON DRAWING ARE MINIMUM SIZES. IF FLUE CONNECTOR SIZE ON GAS OR OIL FIRED EQUIPMENT IS LARGER, USE CONNECTOR SIZE.
7. 8" X 8" SUPPLY AIR REGISTER TO BE OPEN IN ZONES 3 AND 4 ONLY FOR FREEZE PROTECTION IN MECHANICAL ROOM.
8. 8" X 8" RETURN AIR REGISTER TO BE OPEN IN ZONES 3 AND 4 ONLY.
9. ALL GAS FIRED EQUIPMENT SHALL BE PROVIDED WITH A DRAFT DIVERTER. ALL OIL FIRED EQUIPMENT SHALL BE PROVIDED WITH A BAROMETRIC DAMPER.

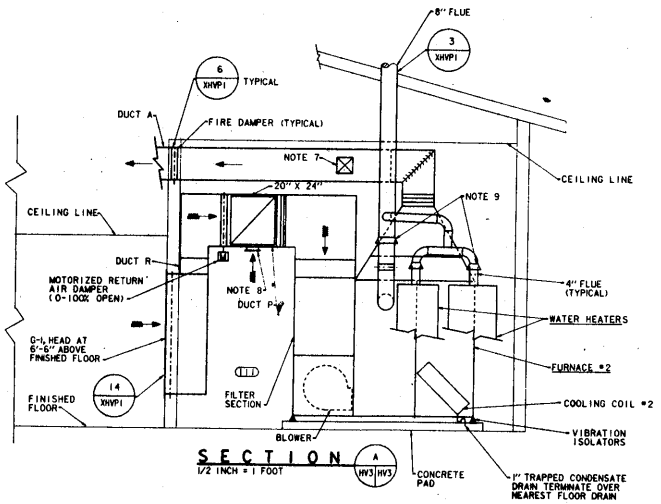

SECTION A

1/2 INCH = 1 FOOT

HV3 HV3

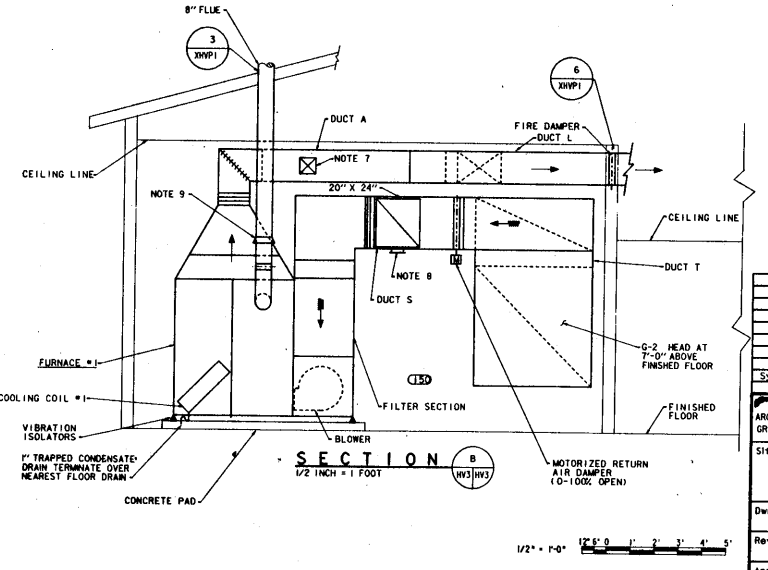

SECTION B

1/2 INCH = 1 FOOT

HV3 HV3

1/2" = 1'-0"

Symbol	Description	Date	Approved
	Revisions		

J. E. SIRRINE COMPANY
ARCHITECT - ENGINEER DIVISION
GREENVILLE, SOUTH CAROLINA

US ARMY ENGINEER DIVISION HUNTSVILLE
CORPS OF ENGINEERS
HUNTSVILLE, ALABAMA

Site adapt A/E :

ARMY MOBILIZATION DESIGNS
US Army Corps of Engineers

WARD-46 BED

MECHANICAL ROOM PLAN

Dwn. by : JSB	Ckd. by : JML		
Reviewed by : MJC	Date : 14 MAY 84	Sheet reference number : HV-3	Design file no. : M086M03
Approved by : CMH	Drawing code : M 510-10-F		Rev.
			Sheet 3 of 10

5 | 4 | 3 | 2 | 1

T 15 D2