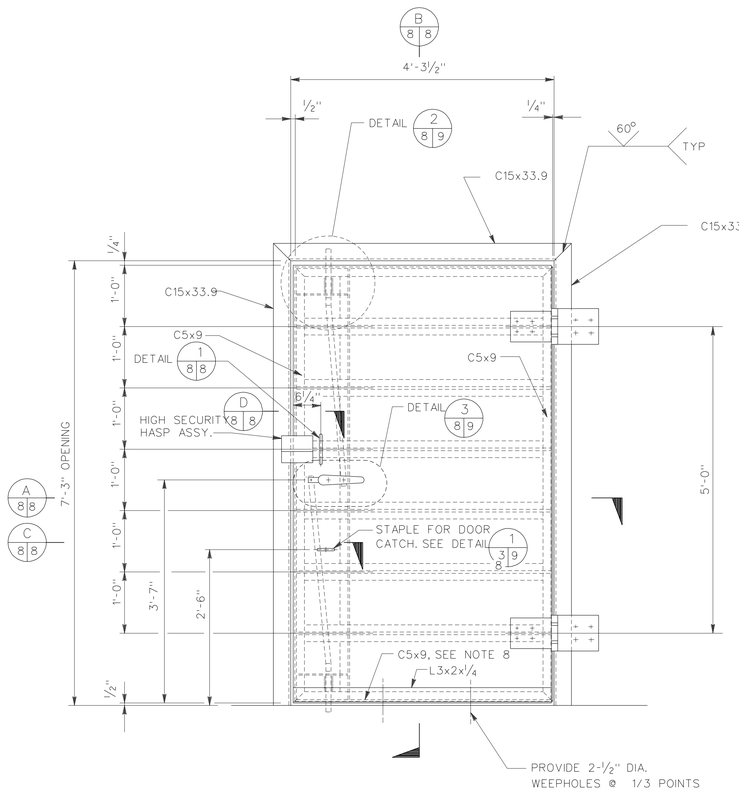

EXTERIOR ELEVATION

SCALE 1"=1'-0"

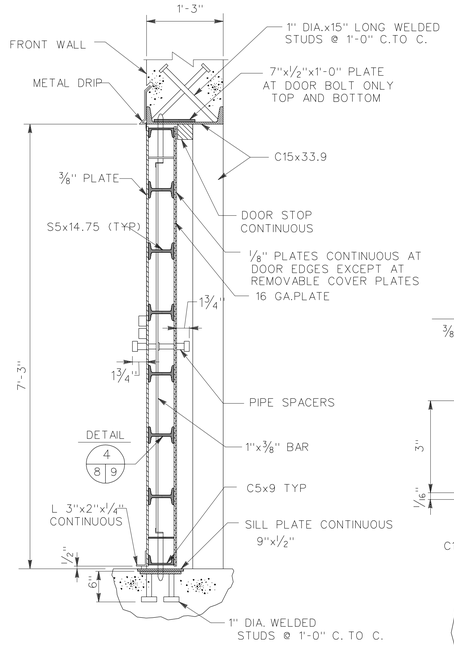

SECTION B 8 8

SCALE 1"=1'-0"

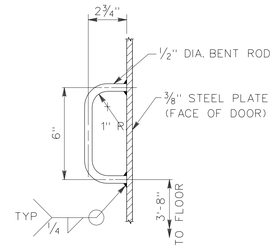

DOOR PULL DETAIL 1 8 8

SCALE 3"=1'-0"

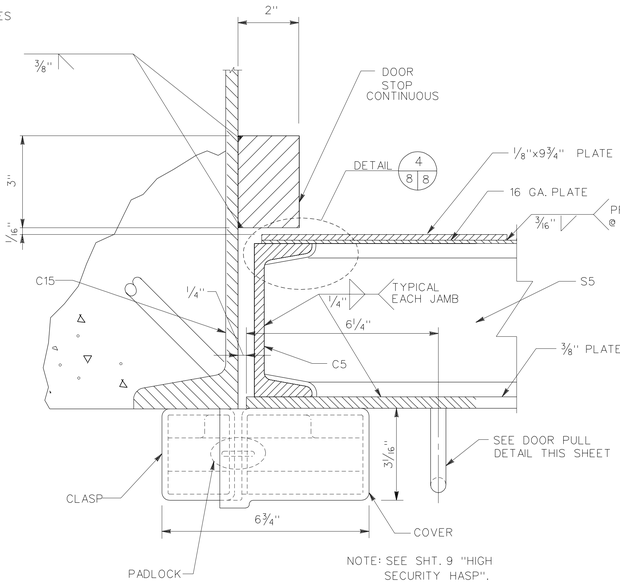

SECTION D 8 8

NO SCALE

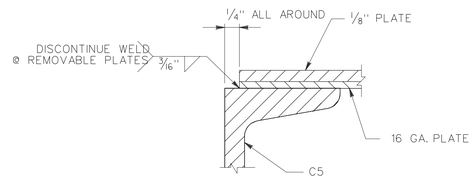

DETAIL 4 8 8

NO SCALE

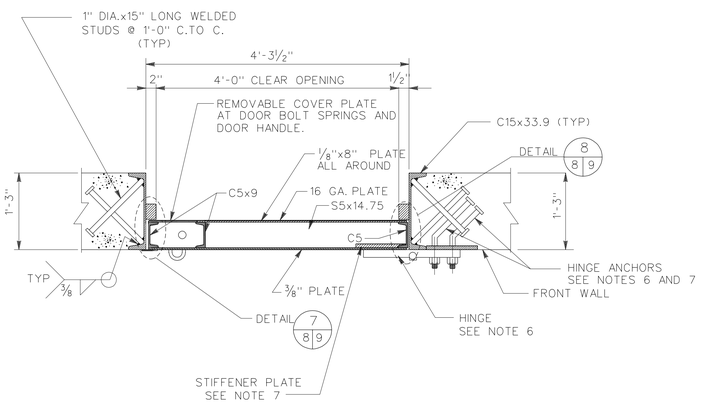

SECTION A 8 8

SCALE 1"=1'-0"

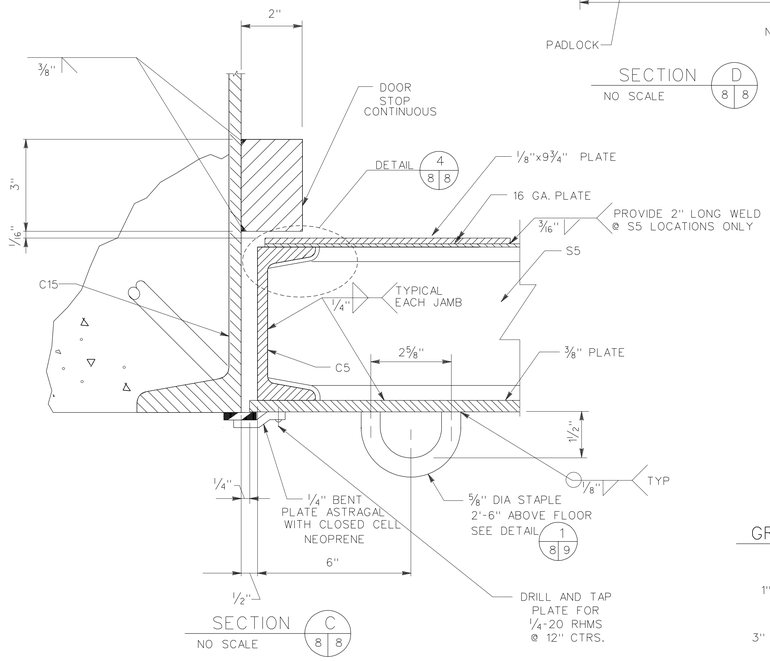

SECTION C 8 8

NO SCALE

DOOR BOLT SPRINGS

MATERIAL - HARD DRAWN STEEL WIRE
QQ-W-428 TYPE II, ASTM A 227-77

	TYPE 1	TYPE 11
WIRE DIAMETER	0.080"	0.105"
DIRECTION OF HELIX - OPTIONAL		
TOTAL COILS	12"	14"
FREE LENGTH	7.8"	10"
OUTSIDE DIAMETER	1.5"	1.5"
LOAD AT COMPRESSED LENGTH OF 4.25"	6# ±1"	30# ±2#
LOAD AT COMPRESSED LENGTH OF 2.25"	9.5# ±2#	40# ±5#
CLOSED ENDS		

NOTES:

1. ALL WELDING SHALL BE IN ACCORDANCE WITH AWS D1.1, LATEST EDITION.
2. ALL STRUCTURAL STEEL SHALL CONFORM TO ASTM A-36 UNLESS OTHERWISE NOTED.
3. STEEL DOOR FRAMES SHALL BE NEATLY MITERED AND ALL WELDS GROUND SMOOTH.
4. BREAK ALL EXPOSED SHARP EDGES.
5. FRACTIONAL TOLERANCES_±1/32
6. HINGE DESIGN INCLUDING HINGE PIN AND ANCHORAGE TO DOOR AND CONCRETE FRAME IS CONTRACTOR'S RESPONSIBILITY. A MINIMUM OF FOUR HINGE ANCHORS SHALL BE PROVIDED PER LEAF.
7. STIFFENER PLATES AT HINGE LOCATIONS SHALL BE PROVIDED AS REQUIRED BY HINGE MANUFACTURER.
8. COAT BOTTOM OF C5 CHANNEL WITH PITCH AFTER WEEPHOLES ARE DRILLED.

GRAPHIC SCALES:

1" = 1'-0" 12" 9" 6" 3" 0 1' 2'

3" = 1'-0" 1" 0 1" 2" 3" 4" 5" 6" 7" 8" 9" 10" 11"

Symbol	Description	Date	Approved
	Revisions		

U.S. ARMY ENGINEER DIVISION, HUNTSVILLE
CORPS OF ENGINEERS
HUNTSVILLE, ALABAMA

US Army Corps of Engineers

Site adapt A/E :

MAGAZINE, CONCRETE, CUBICLE, EARTH - COVERED
DOOR ELEVATIONS AND SECTIONS

Dwn. by : RDP | Ckd. by : AF

Reviewed by :

Approved by :

Date :

Drawing code : STD 422-15-01

Sheet reference number : 8

Design file no. : 20208

Rev.

Sheet 8 of 10