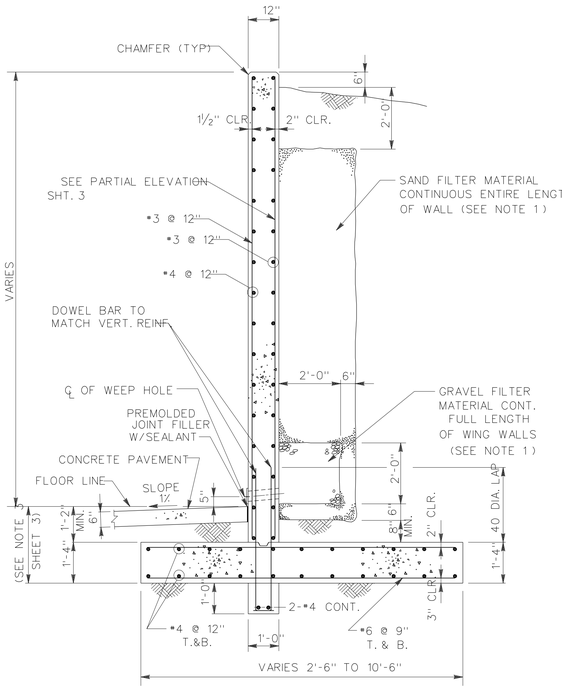

SECTION A
SCALE ½"=1'-0" (3|4)

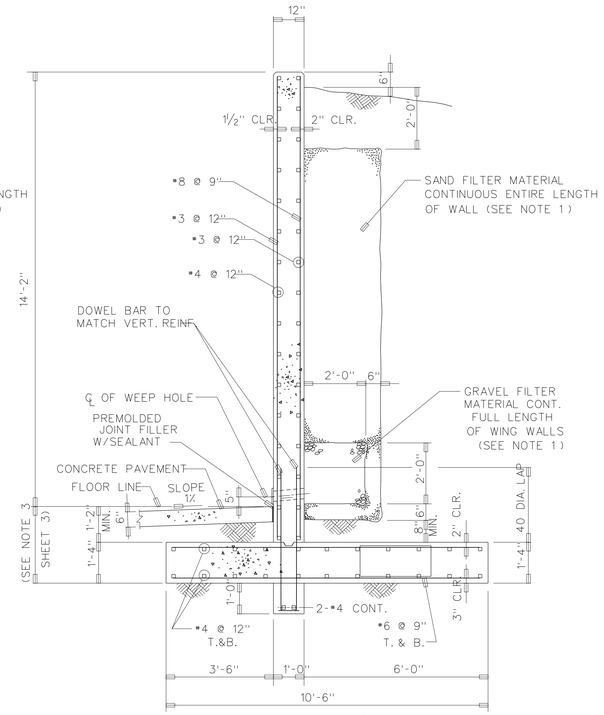

SECTION B
SCALE ½"=1'-0" (3|4)

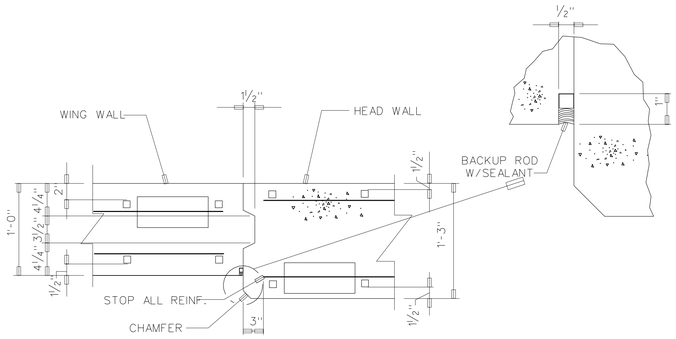

DETAIL 1
SCALE 1½"=1'-0" (3|4)

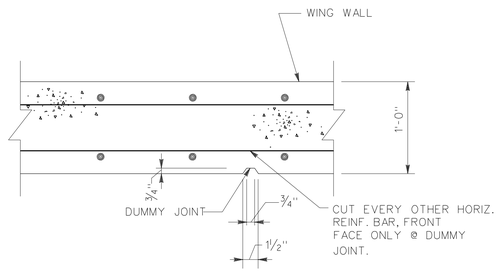

SECTION 2
SCALE 1½"=1'-0" (3|4)

ABBREVIATION LEGEND

ACI	AMERICAN CONCRETE INSTITUTE
ASTM	AMERICAN SOCIETY FOR TESTING AND MATERIALS
AWS	AMERICAN WELDING SOCIETY
B.	BOTTOM
CLR.	CLEARANCE
CONC.	CONCRETE
C.TO C.	CENTER-TO-CENTER
℄	CENTERLINE
CTRS	CENTERS
DIA	DIAMETER
E.F.	EACH FACE
E.W.	EACH WAY
EXP.	EXPANSION
FIN.FLR.	FINISH FLOOR
GA.	GAGE
GALV.	GALVANIZED
I.E.	INVERT ELEVATION
REINF.	REINFORCING
RHMS	RECESSED HEAD METAL SCREW
SHT.	SHEET
SQ.	SQUARE
STD.	STANDARD
T.	TOP
TYP	TYPICAL
VERT.	VERTICAL
W/	WITH

NOTE:

1. THE SAND AND GRAVEL DRAINAGE SHOWN IN SECTIONS A AND B (SHEET 4) SHOULD BE TERMINATED AT THE POINT WHERE THE WING WALL HEIGHT IS SUFFICIENT TO MAINTAIN THE 2'-0" SATISFACTORY FILL MATERIAL COVER OVER AT LEAST 6" OF SAND FILTER MATERIAL. PAST THIS POINT, AN AN ADDITIONAL 6" OF SAND FILTER MATERIAL SHOULD BE ADDED TO "CLOSE-IN" THE END OF GRAVEL FILL MATERIAL.

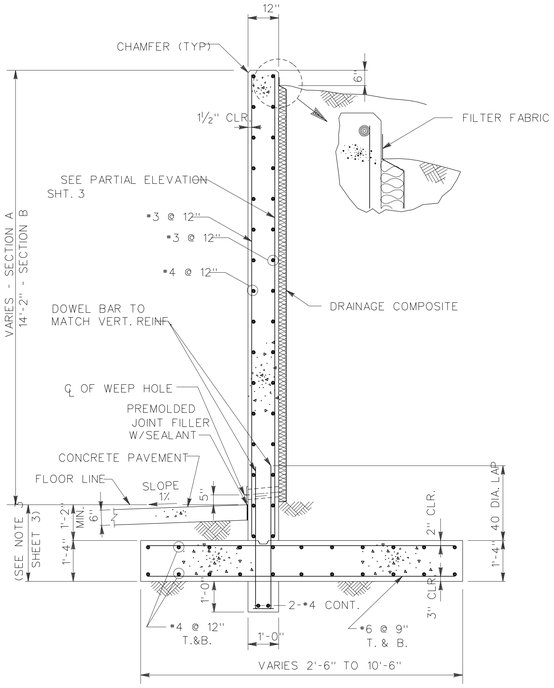

DRAINAGE SYSTEM
AT WING WALLS

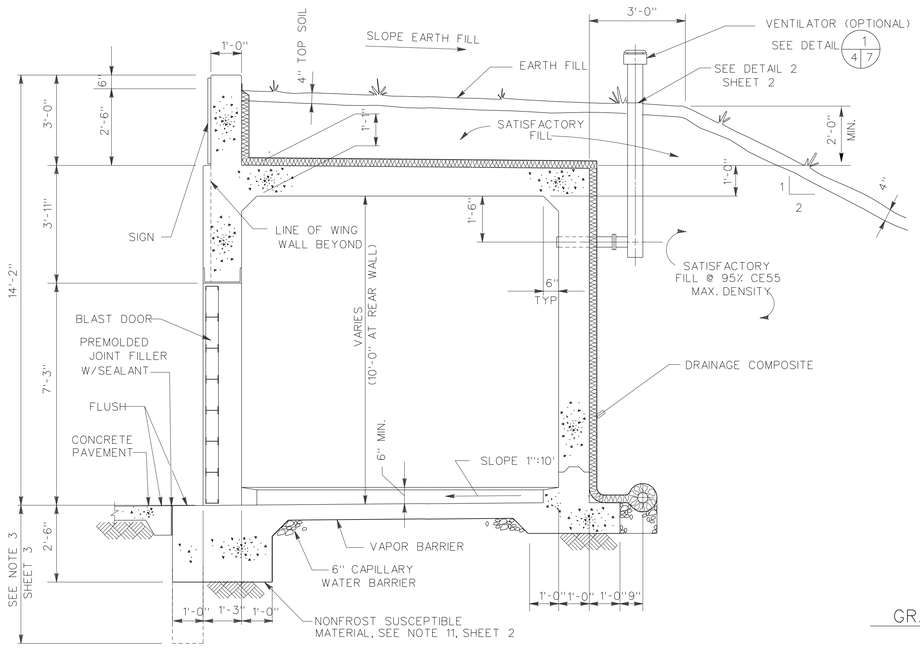

DRAINAGE SYSTEM
AROUND CUBICLE

ALTERNATE DRAINAGE SYSTEMS (SEE NOTE 16, SHEET 2)
SCALE ½"=1'-0"

GRAPHIC SCALES:

1½" = 1'-0" 12" 9" 6" 3" 0 1'

Symbol	Description	Date	Approved

Revisions

U.S. ARMY ENGINEER DIVISION, HUNTSVILLE
CORPS OF ENGINEERS
HUNTSVILLE, ALABAMA

Site adapt A/E :

US Army Corps of Engineers

MAGAZINE, CONCRETE, CUBICLE, EARTH - COVERED

SECTIONS AND DETAILS

Dwn. by : RDP	Ckd. by : AF		
Reviewed by :	Date :	Sheet reference number : 4	Design file no. : 20204 Rev.
Approved by :	Drawing code : STD 422-15-01		Sheet 4 of 10