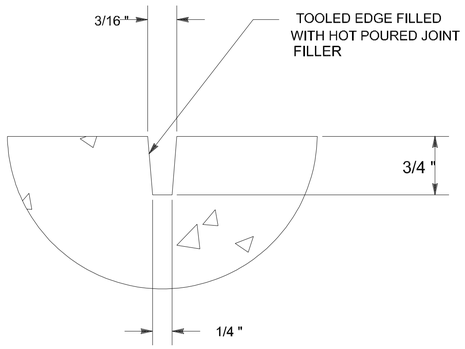

TOOLED EDGE DETAIL

SCALE: N.T.S.

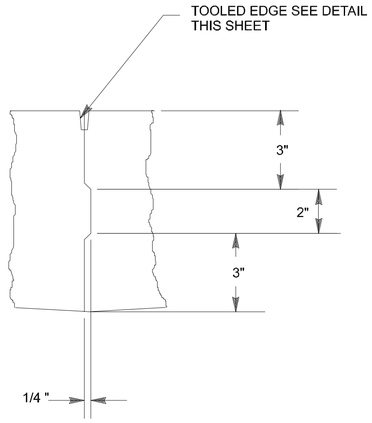

DETAIL

SCALE: N.T.S.

S- S-

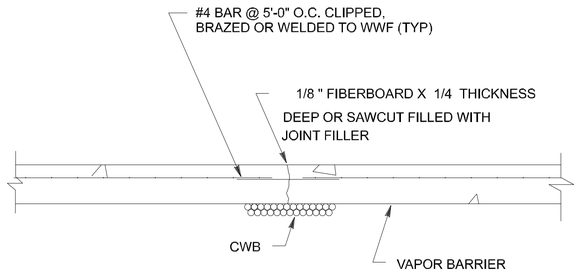

EXPANSION JT. DETAIL

SCALE: N.T.S.

S- S-

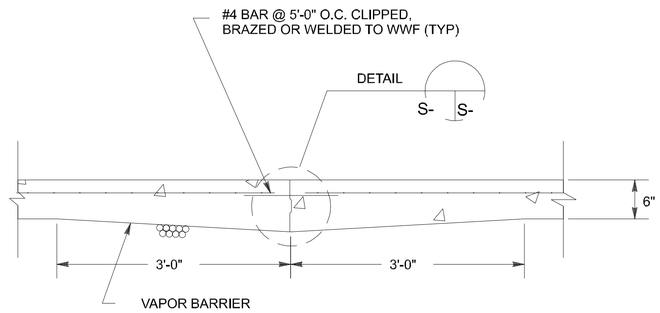

OPTIONAL EXPANSION JOINT DETAIL

SCALE: N.T.S.

US Army Corps of Engineers

Symbol	Description	Date	Approved	Symbol	Description	Date	Approved

Designed by: J. JENUS (AACWCB)
Dwn by: RLA
Ckd by: WAW
Reviewed by: CBM
Submitted by: William H. Zehrt
Date: MAR 94
Rev.
Design file no. 99 - 421-80-06
Drawing code: 84424
File name: AFSQB.dgn
Plot date: " "
Plot scale: 1: "

U. S. ARMY ENGINEERING AND SUPPORT CENTER, HUNTSVILLE
HUNTSVILLE, ALABAMA

AIR FORCE MODULAR STORAGE MAGAZINE, BOX-TYPE
421-80-06

BUILDING DETAILS

Sheet reference number:
S - 8
Sheet of