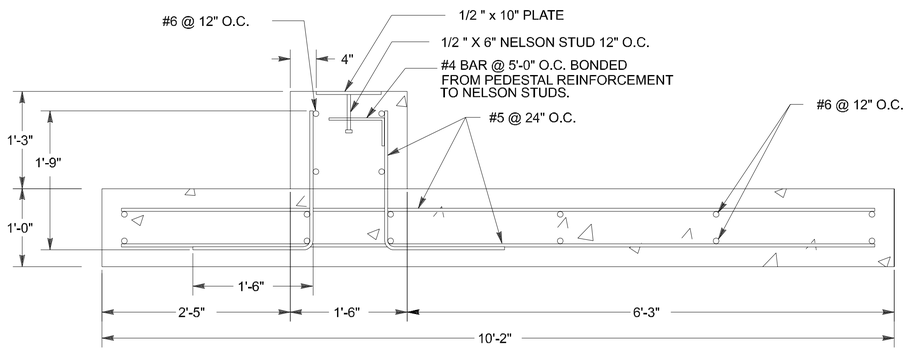

SECTION
SCALE: N.T.S.
S- S-

ROTATED 90° CW
SCALE: 1"=1'-0"
NOTE: UNLESS OTHERWISE NOTED 3" MINIMUM COVERAGE ON ALL REBAR

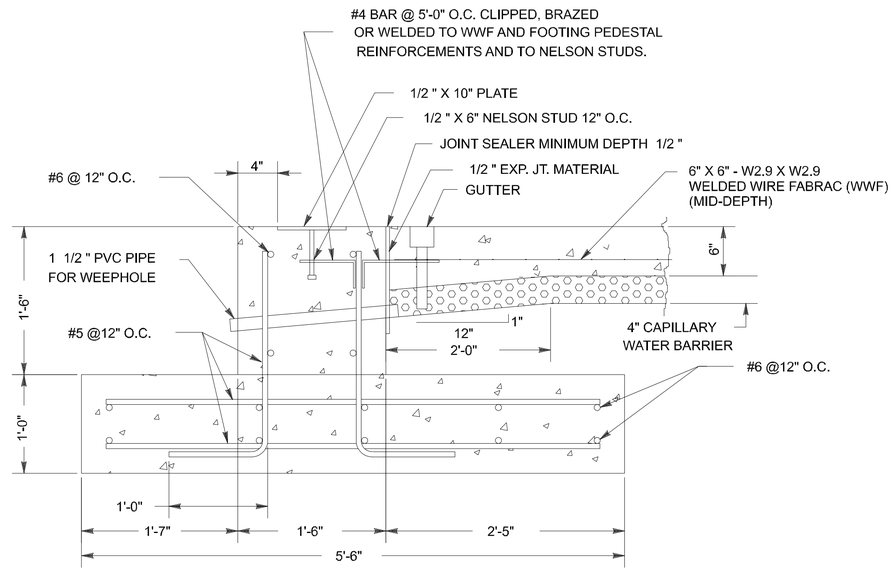

SECTION
SCALE: N.T.S.
S- S-

NOTE: UNLESS OTHERWISE NOTED 3" MINIMUM COVERAGE ON ALL REBAR

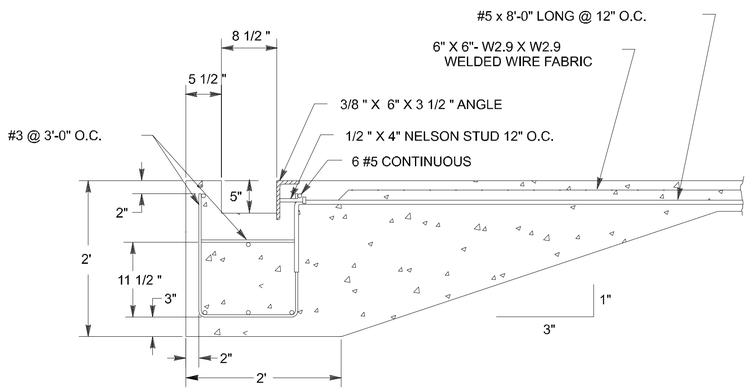

SECTION
SCALE: N.T.S.
S- S-

NOTE: UNLESS OTHERWISE NOTED 3" MINIMUM COVERAGE ON ALL REBAR

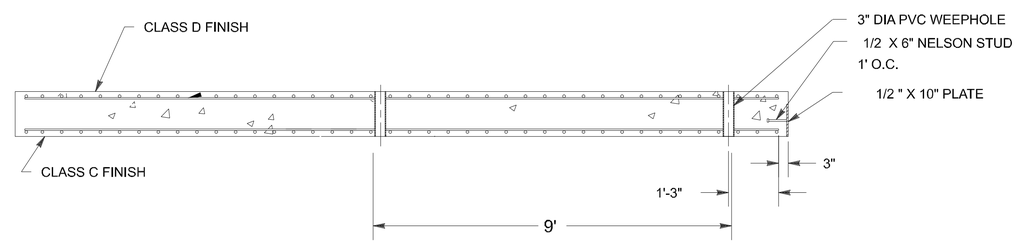

SECTION
SCALE: N.T.S.
S- S-

NOTE: UNLESS OTHERWISE NOTED 3" MINIMUM COVERAGE ON ALL REBAR

US Army Corps of Engineers

Symbol	Description	Date	Approved	Symbol	Description	Date	Approved

Rev.

Date: MAR 94
Design file no. 99 - 421-80-06
Drawing code: 84422
File name: AFS08.dgn
Plot date: - -
Plot scale: 1:

Designed by: J. JENUS (AAC/WGB)
Dwn by: RLA
Ckd by: WAW
Reviewed by: CMB
Submitted by: William H. Zehrt

U. S. ARMY ENGINEERING AND SUPPORT CENTER, HUNTSVILLE
HUNTSVILLE, ALABAMA

AIR FORCE MODULAR STORAGE MAGAZINE, BOX-TYPE
421-80-06

BUILDING SECTIONS

Sheet reference number:
S - 7
Sheet of