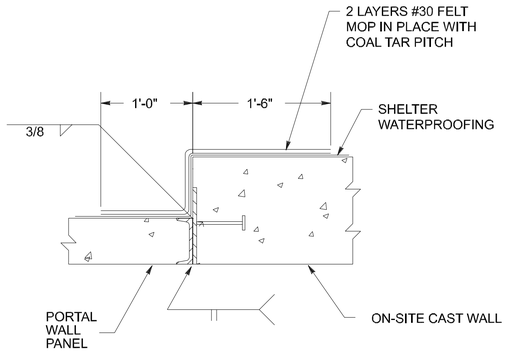

SECTION
SCALE: N.T.S.
S- S-

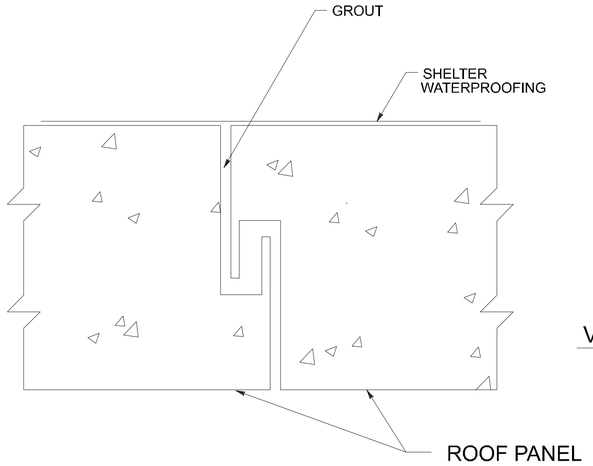

DETAIL
SCALE: N.T.S.
S- S-

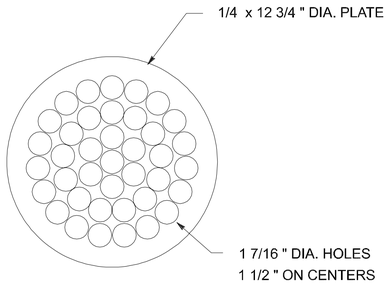

VENTILATOR PLATE DETAIL
SCALE: N.T.S.
S- S-

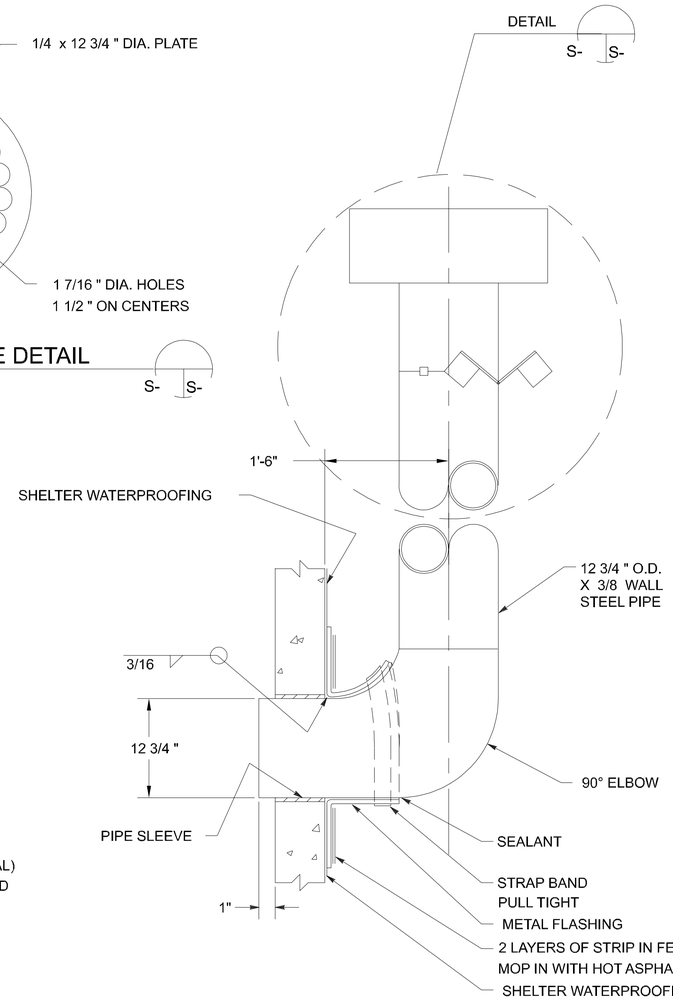

DETAIL
SCALE: N.T.S.
S- S-
S-2

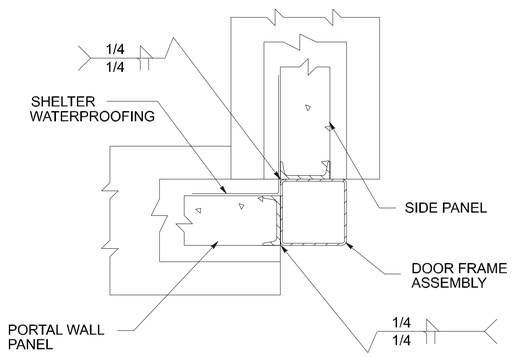

SECTION
SCALE: N.T.S
S- S-

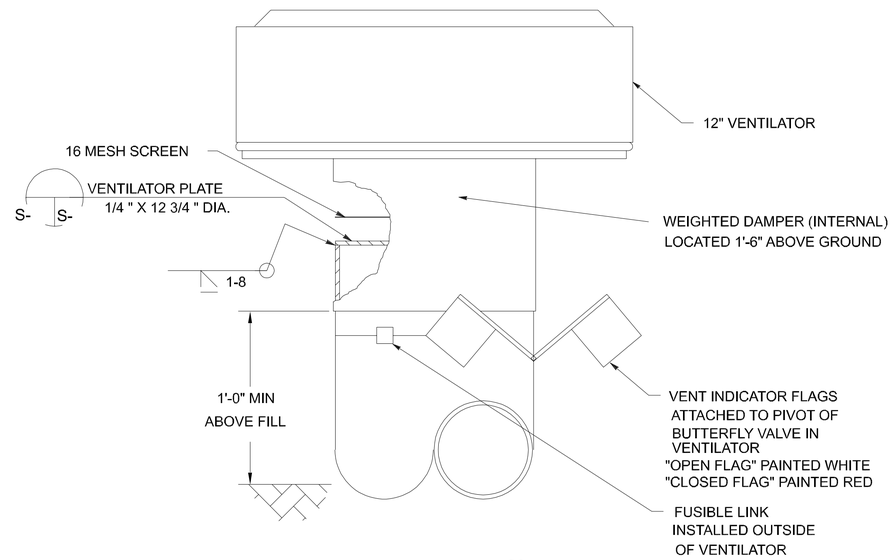

DETAIL
SCALE: N.T.S
S- S-

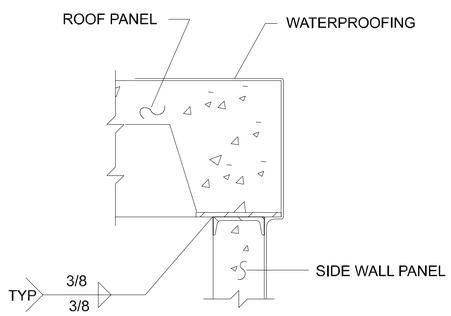

DETAIL
SCALE: N.T.S.
36
S-2 S-6

US Army Corps
of Engineers

Symbol	Description	Date	Approved	Symbol	Description	Date	Approved

Rev.

Date: MAR 94
Design file no. 99 - 421 - 80 - 06
Drawing code: 84422
File name: AFS06.dgn
Plot date: - -
Plot scale: 1:

Designed by: J. JENUS (AAC/WGB)
Dwn by: RLA
Ckd by: WAW
Reviewed by: CMB
Submitted by: William H. Zehrt

U. S. ARMY ENGINEERING AND
SUPPORT CENTER, HUNTSVILLE
HUNTSVILLE, ALABAMA

AIR FORCE MODULAR STORAGE
MAGAZINE, BOX-TYPE
421-80-06

SECTIONS & DETAILS

Sheet
reference
number:

S - 6

Sheet of