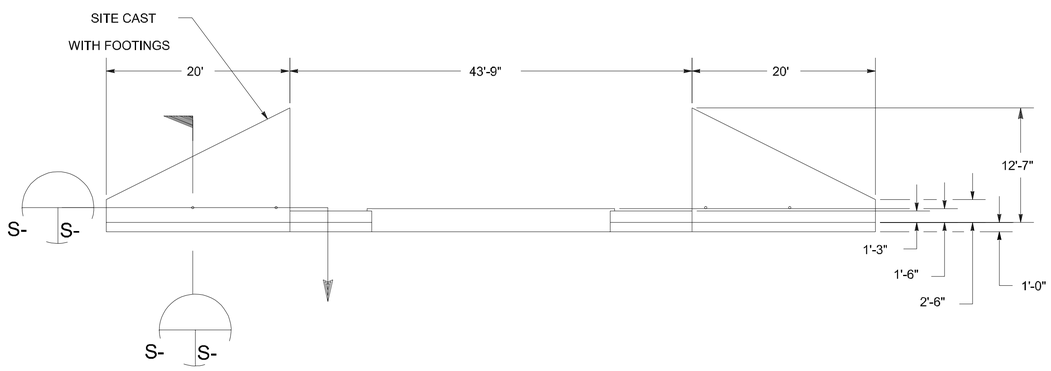

FOUNDATION FRONT ELEVATION

SCALE 1/8 " = 1'-0"

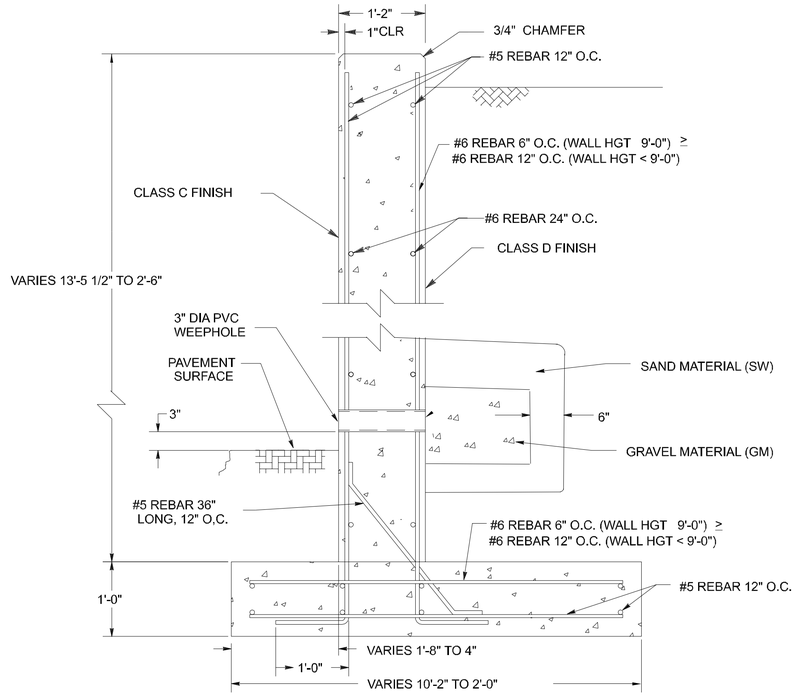

SECTION

SCALE: N.T.S.

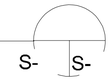

NOTE: UNLESS OTHERWISE NOTED 3" MINIMUM COVERAGE ON ALL REBAR.
IF NO SPACE FOR HOOK, THEN HOOK IN OPPOSITE DIRECTION.

SPECIFIC NOTES:

1. THE SAND AND GRAVEL MATERIALS SHOWN IN THE SECTIONAL VIEW THROUGH WING WALL SHOULD BE TERMINATED AT THE POINT WHERE THE WING WALL HEIGHT IS INSUFFICIENT TO MAINTAIN THE 2'-3' COHESIONLESS FILL MATERIAL. PLACE COVER OVER AT LEAST 6" OF SAND MATERIAL. PAST THIS POINT, AN ADDITIONAL 6" OF SAND MATERIAL SHOULD BE ADDED TO "CLOSE IN" THE END OF GRAVEL MATERIAL.

2. AS AN OPTION, DEPENDING ON THE SITE SPECIFIC CONDITIONS, THE WEEPHOLES THROUGH THE WING WALLS MAY BE REPLACED WITH PERFORATED PIPE DRAINS PLACED IN THE GRAVEL MATERIAL RUNNING LATERALLY BEHIND THE WING WALLS AND PORTAL WALL PANELS AND CONNECTED TO THE PERIMETER FOOTING DRAINS.

GRAPHIC SCALE

1/8 " = 1'-0"

US Army Corps of Engineers

Symbol	Description	Date	Approved	Symbol	Description	Date	Approved

Designed by: J. JENUS (AACWCB)
Dwn by: RLA
Ckd by: WAW
Reviewed by: CMB
Submitted by: WILLIAM H. ZEHRT
Date: MAR 94
Rev.
Design file no. 99 - 421-80-06
Drawing code: 84420
File name: AFS04.dgn
Plot date: - -
Plot scale: 1: -

U. S. ARMY ENGINEERING AND SUPPORT CENTER, HUNTSVILLE
HUNTSVILLE, ALABAMA

AIR FORCE MODULAR STORAGE MAGAZINE, BOX-TYPE
421-80-06

FOUNDATION FRONT ELEVATION AND SECTION

Sheet reference number:

S - 4

Sheet of