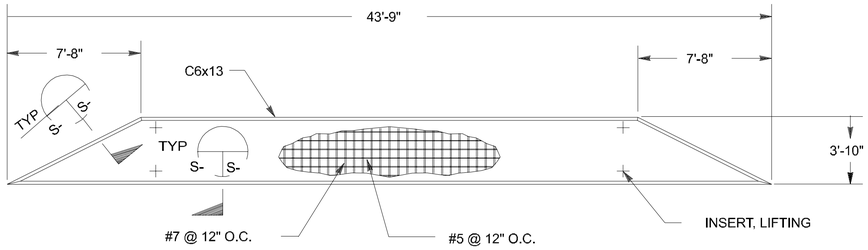

CAP PANEL

SCALE: N.T.S.

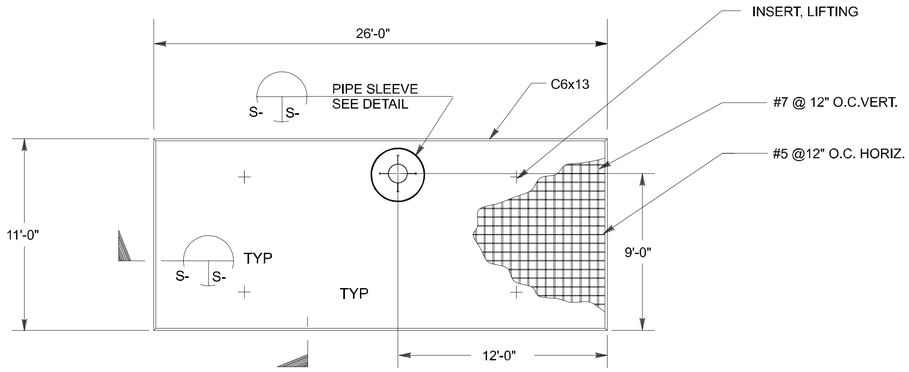

BACK WALL PANEL

SCALE: N.T.S.

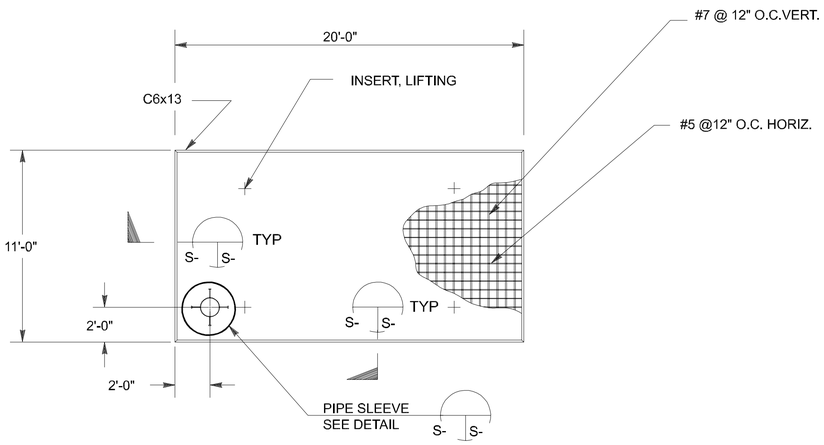

SIDE WALL PANEL, SEE NOTE 3 THIS SHEET

SCALE: N.T.S.

GENERAL NOTES:

1. THE TWO REBAR PATTERNS IN PANELS ARE TO BE STAGGERED TO PRODUCE A 6" x 6" SQUARE MESH PATTERN OF #5 AND #7 REBAR.
2. SIZE, LOCATION AND QUANTITY OF TILT-UP BRACE ATTACHMENT POINTS AND LIFTING INSERTS TO BE DETERMINED BY CONTRACTOR.
3. PROVIDE ONE SIDE WALL PANEL TO BE VENTED. WING SIMILAR TO PIPING CONFIGURATION AS PROVIDED IN DETAIL 6, SHEET 14
4. PROVIDE ELECTRICAL CONTINUITY FOR LIGHTNING PROTECTION BY BONDING #4 BAR @ 5'-0" O.C. E.F.E.W. TO C6 CHANNELS AND PRECAST VERTICAL AND HORIZONTAL REINFORCEMENT.
5. PROVIDE ELECTRICAL CONTINUITY BY WELDING VERTICAL AND HORIZONTAL REINFORCEMENTS TO VENT PIPE SLEEVE.

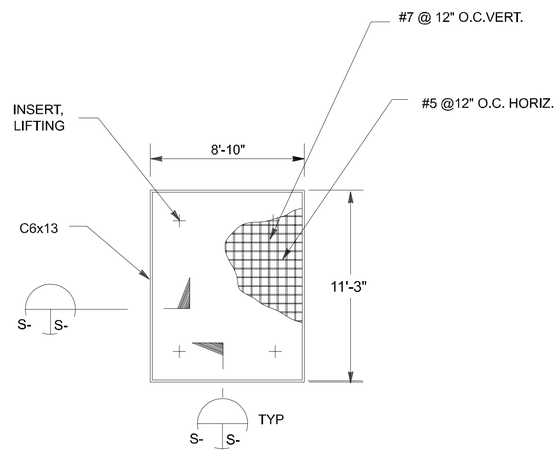

WALL PANEL DETAIL

SCALE: N.T.S.

US Army Corps of Engineers

Symbol	Description	Date	Approved	Symbol	Description	Date	Approved

Designed by: J. JENUS (AACWGB)
Dwn by: RLA
Ckd by: WAW
Reviewed by: CMB
Submitted by: William H. Zobel
Date: MAR 94
Rev.
Design file no. 99 - 421-80-06
Drawing code: 84431
File name: AFS15.dgn
Plot date: " "
Plot scale: 1: "

U. S. ARMY ENGINEERING AND SUPPORT CENTER, HUNTSVILLE
HUNTSVILLE, ALABAMA

AIR FORCE MODULAR STORAGE MAGAZINE: BOX-TYPE
421-80-06

PRECAST PANELS DETAILS

Sheet reference number:
S -15
Sheet of