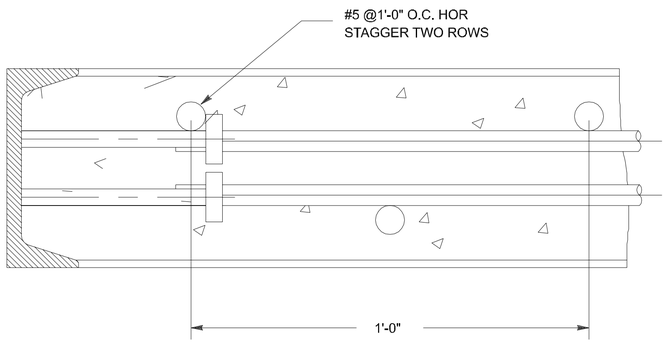

PANEL SECTION ROTATED 90 DEG. C.W.

SCALE: N.T.S.

S- S-

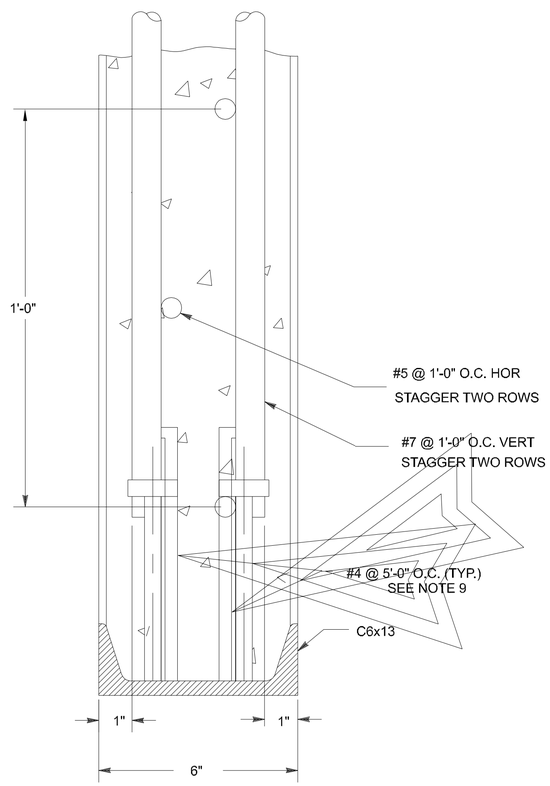

PANEL SECTION ROTATED 90 DEG. C.W.

SCALE: N.T.S.

S- S-

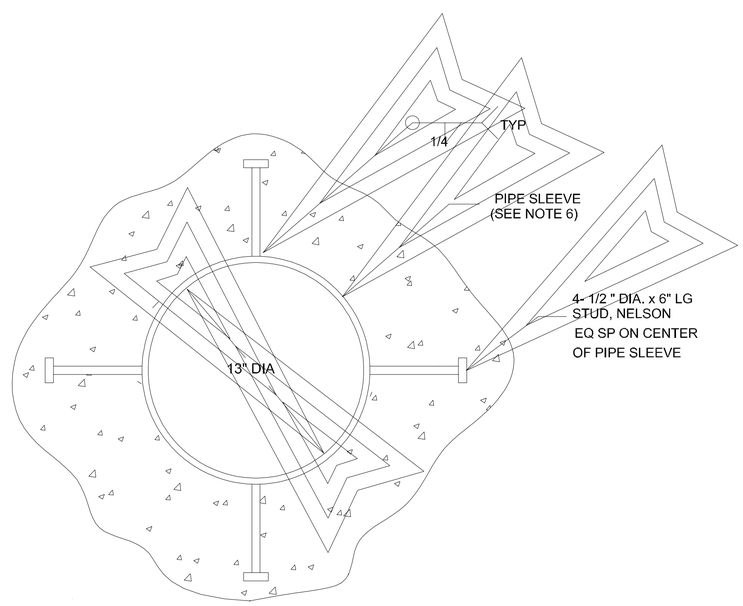

PIPE SLEEVE DETAIL

SCALE: N.T.S.

S- S-

GENERAL NOTES:

1. UNLESS OTHERWISE NOTED CONCRETE COVER OVER STEEL REINFORCING STEEL SHALL CONFORM TO THE REQUIREMENTS BY ACI 318.
2. REINFORCING STEEL SHALL CONFORM TO THE REQUIREMENTS OF ASTM A615, GRADE 60.
3. CONCRETE SHALL HAVE A 28 DAY COMPRESSIVE STRENGTH OF 4000 PSI. PANELS MAY BE PRECAST BY A MANUFACTURER SPECIALIZING IN PRECAST PRODUCTS OR PRECAST AT THE JOB SITE.
4. WIRE TIE REINFORCING BAR AS NEEDED, USING NO 14 WIRE.
5. A CLASS C FINISH IS REQUIRED FOR EXPOSED FORMED SURFACES OF PRECAST PANELS. A CLASS C OR D FINISH IS REQUIRED FOR SURFACES WHICH WILL BE BELOW GRADE OR NOT EXPOSED TO VIEW AFTER FINAL ASSEMBLY.
6. PIPE SLEEVE MATERIAL: 3/8 THICK X 6" WIDE X 42" LONG STEEL PLATE PER ASTM A36 ROLLED TO 13" I.D.
7. SIZE, LOCATION, AND QUANTITY OF TILT-UP BRACE ATTACHMENT POINTS AND LIFTING INSERTS TO BE DETERMINED BY CONTRACTOR.
8. THE TWO REBAR PATTERNS IN PANELS ARE TO BE STAGGERED TO PRODUCE A 6" X 6" SQUARE MESH PATTERN OF #5 AND #7 REBAR. STAGGER NELSON STUDS FOR A UNIFORM SPACING OF 12 INCHES.
9. PROVIDE ELECTRICAL CONTINUITY FOR LIGHTNING PROTECTION BY BONDING #4 BAR @ 5'-0" O.C. E.F.E.W. TO C6 CHANNELS AND PRECAST VERTICAL AND HORIZONTAL REINFORCEMENT.
10. PROVIDE ELECTRICAL CONTINUITY BY WELDING VERTICAL AND HORIZONTAL REINFORCEMENTS TO VENT PIPE SLEEVE.

US Army Corps of Engineers

Symbol	Description	Date	Approved	Symbol	Description	Date	Approved

Designed by: J. JENUS (AACWCB)
Dwn by: RLA
Ckd by: WAW
Reviewed by: CBM
Submitted by: William H. Zobrist
Date: MAR 94
Rev.
Design file no. 99 - 421-80-06
Drawing code: 84430
File name: AFS14.dgn
Plot date: " "
Plot scale: 1: "

U. S. ARMY ENGINEERING AND SUPPORT CENTER, HUNTSVILLE
HUNTSVILLE, ALABAMA

AIR FORCE MODULAR STORAGE MAGAZINE, BOX-TYPE
421-80-06

PRECAST PANELS SECTIONS & DETAIL

Sheet reference number:
S -14

Sheet of