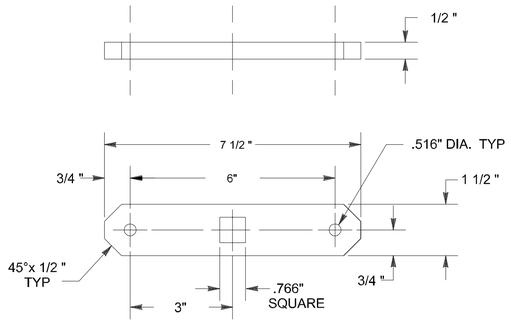

BAR DETAIL 23
SCALE:N.T.S.
S-11 S-12

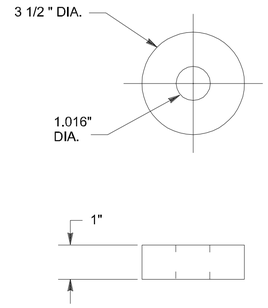

SPACER DETAIL 21
SCALE:N.T.S.
S-11 S-12

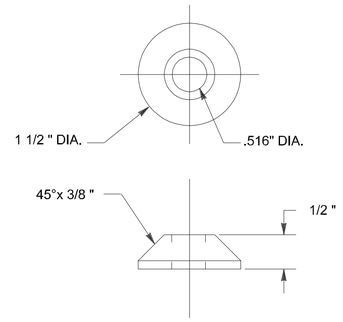

WASHER DETAIL 24
SCALE:N.T.S.
S-11 S-12

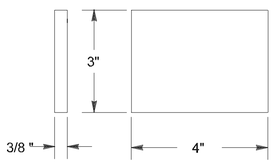

PLATE DETAIL 32
SCALE:N.T.S.
S-11 S-12

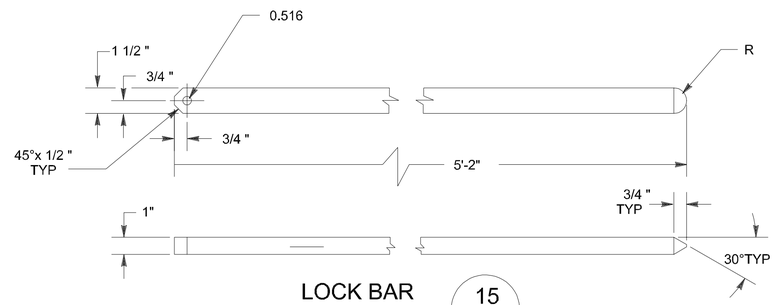

LOCK BAR 15
SCALE:N.T.S.
S-11 S-12

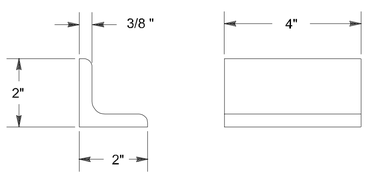

GUIDE ANGLE DETAIL 29
SCALE:N.T.S.
S-11 S-12

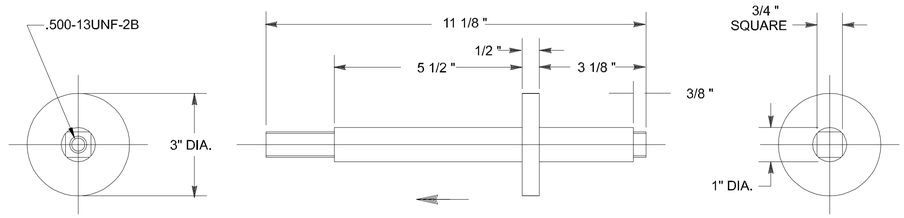

SHAFT DETAIL 20
SCALE:N.T.S.
S-11 S-12

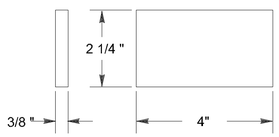

PLATE DETAIL 28
SCALE:N.T.S.
S-11 S-12

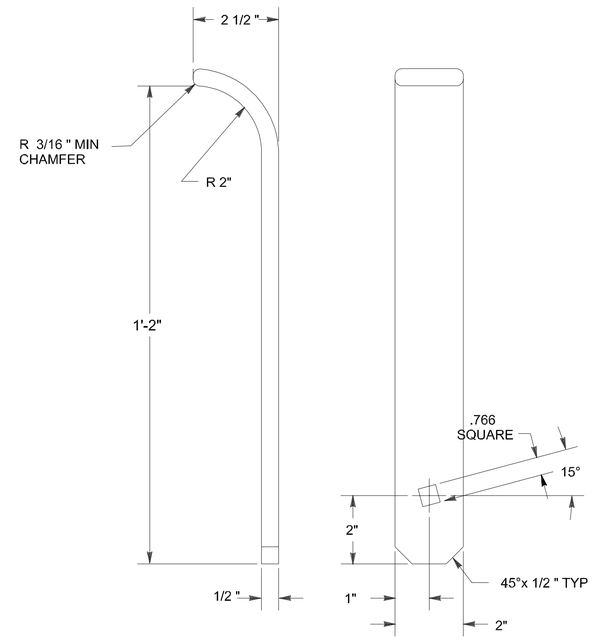

HANDLE DETAIL 18
SCALE:N.T.S.
S-11 S-12

US Army Corps of Engineers

Symbol	Description	Date	Approved	Symbol	Description	Date	Approved

Designed by: J. JENUS (AAC/WGB)
Dwn by: RLA
Ckd by: WAW
Reviewed by: CMB
Submitted by: William H. Zohrt
Date: MAR 94
Rev.
Design file no. 99 - 421-80-06
Drawing code: 84428
File name: AFS12.dgn
Plot date: - -
Plot scale: 1:

U. S. ARMY ENGINEERING AND SUPPORT CENTER, HUNTSVILLE
HUNTSVILLE, ALABAMA

AIR FORCE MODULAR STORAGE MAGAZINE, BOX-TYPE
421-80-06

RIGHT DOOR ASSEMBLY DETAILS

Sheet reference number:
S -12
Sheet of