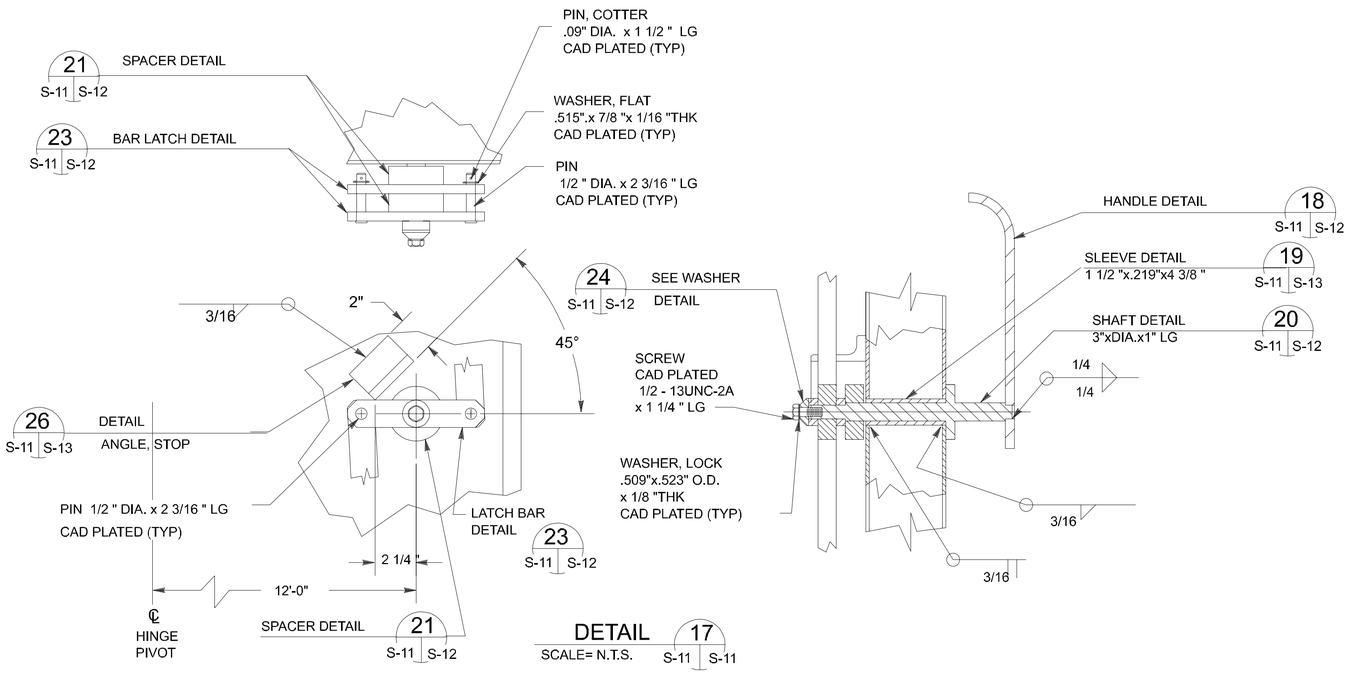

DETAIL 17
SCALE= N.T.S.
S-11 S-11

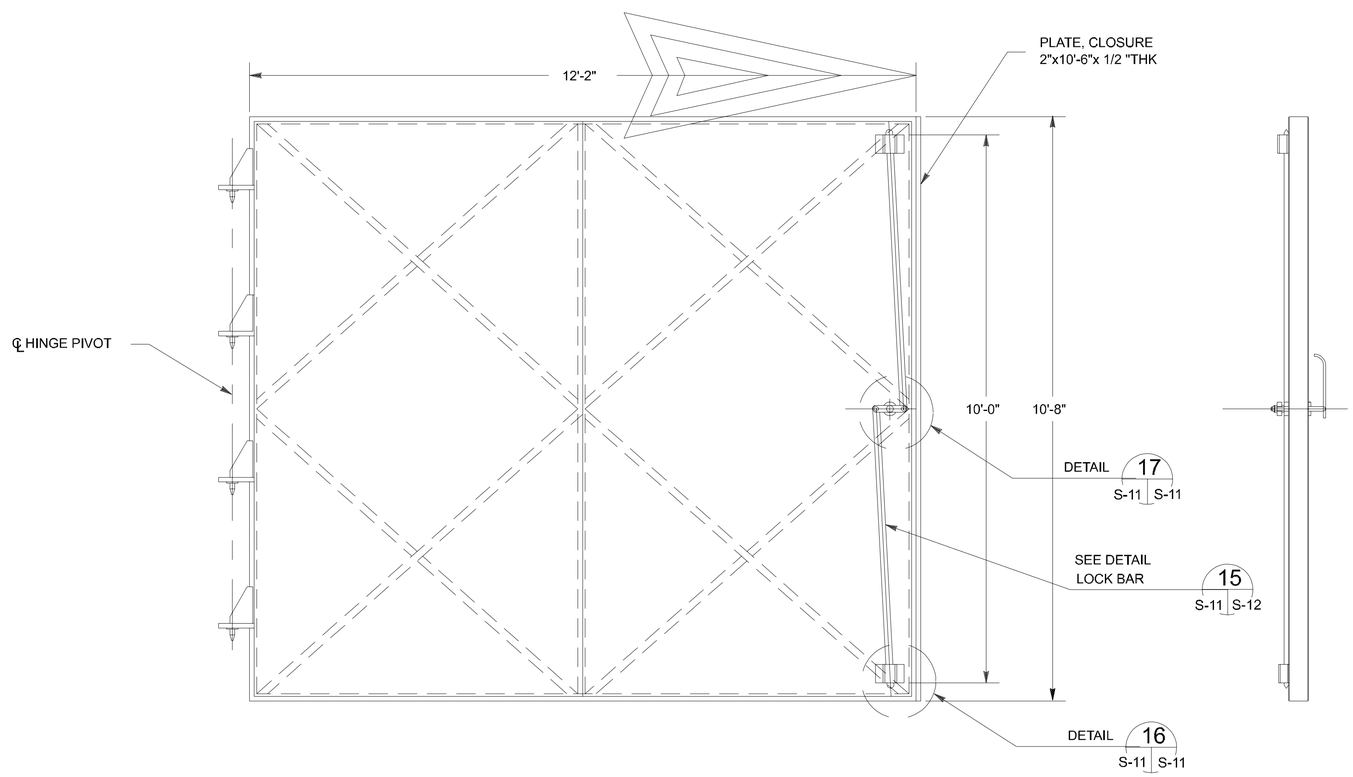

RIGHT DOOR ASSY
(SAME AS -1 EXCEPT AS NOTED)
SCALE= N.T.S.

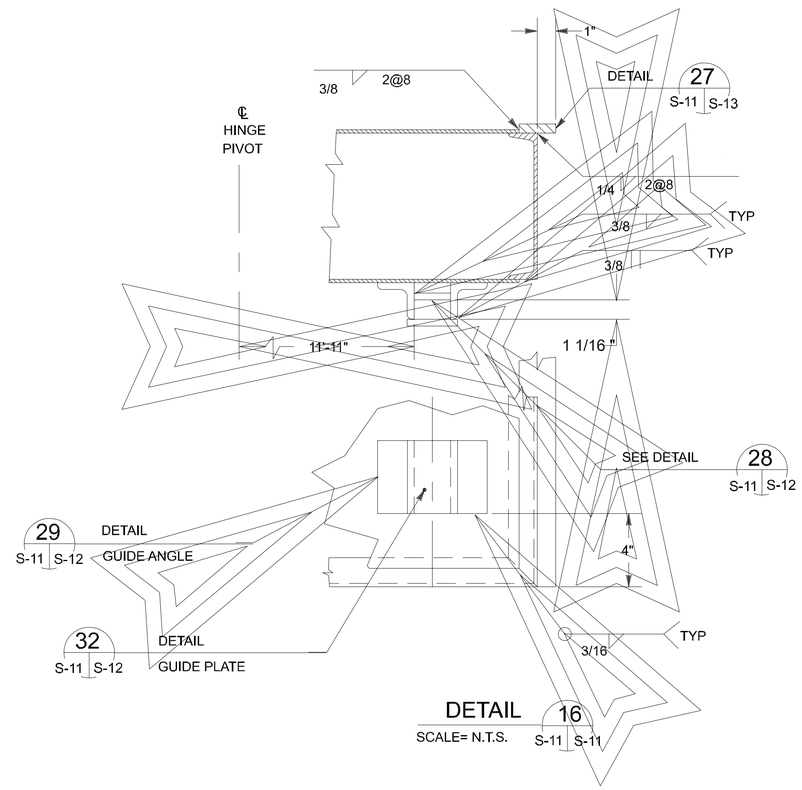

DETAIL 16
SCALE= N.T.S.
S-11 S-11

US Army Corps of Engineers

Symbol	Description	Date	Approved	Symbol	Description	Date	Approved

Rev.

Date: MAR 94
Design file no. 99 - 421-80-06
Drawing code: 84427
File name: AFS11.dgn
Plot date: - -
Plot scale: 1: -

Designed by: J. JENUS (AAC/WGB)
Dwn by: RLA
Ckd by: WAW
Reviewed by: CMB
Submitted by: William H. Zobel

U. S. ARMY ENGINEERING AND SUPPORT CENTER, HUNTSVILLE
HUNTSVILLE, ALABAMA

AIR FORCE MODULAR STORAGE
MAGAZINE: BOX-TYPE
421-80-06

RIGHT DOOR ASSEMBLY

Sheet reference number:
S -11
Sheet of